50/50 Split

Form C-104
Rev. 2/01

CONSTRUCTION VALUE ENGINEERING CONCEPT PROPOSAL
MISSOURI DEPARTMENT OF TRANSPORTATION

Date April 11, 2008

Contract ID 080328-X01 Job No. J0Q2151

County Various Route Various Original Bid Cost $ 216,786.61

Contractor James H. Drew Corporation By Matt West

Designed By Phone (660) 826-2335

VE # 08-28

1. Description of existing requirements and proposed change(s). Advantages/Disadvantages

Line Item: 0130
Item Description: 910-99.02 Misc. ITS DMS Post

RECEIVED
APR 22 2008
Construction & Materials - ECR

Change 12" std pipe to 8" and 10" std pipe (constant diameter)
Also change anchor bolts to 1 1/2" diameter. Calculations and drawings attached.

Advantage: Reduce costs. Improve material delivery time.

2. Estimate of reduction in construction costs. $ 12,000.00

3. Prediction of any effects the proposed change(s) will have on other department costs, such as maintenance and operations.

None.

4. Anticipated date for submittal of detailed change(s) of items required by Section 104.6 of the Specifications.

Approval required in 10 days.
(date)

5. Deadline for issuing a change order to obtain maximum cost reduction, noting the effect of contract completion time or delivery schedule.

April 21, 2008 _____
(date) (effect)

6. Dates of any previous or concurrent submission of the same proposal.

May 10, 2007 Job J6Q2102
(date and/or dates)

Additional Comments:

Delivery on originally designed posts will take approximately 12 to 14 weeks which causes the installation to likely exceed the July 3rd deadline. Delivery of the posts being proposed is estimated at approximately 6 weeks.

***** Portion Below This Line To Be Filled Out by MoDOT *****

Comments: Bridge Division reviewed & approved those plans on J06Q2102 last year. There fore I recommend approval

[signature] 4/17/08

Submitted By Resident Engineer — Date

Comments:

Recommended as a 50/50 split.

☒ **Approval Recommended**

☐ **Rejection Recommended**

[signature] for Mark Shelton 4-17-08

District Engineer — Date

Comments:

By attached notes, this has been previously accepted.

☑ **Approval**

☐ **Rejection**

[signature] 4-28-08

State Operations Engineer BAW — Date

Distribution: Resident Engineer, District Operations Engineer, State Operations Engineer
*Value Engineering Administrator - *MoDOT, P.O. Box 270, Jefferson City, MO 65102

HURTT FABRICATING CORPORATION
P.O. BOX 128
MARCELINE, MO 64658
Phone 660-376-3501
Fax 660-376-2015

April 10, 2008

ATTN: MIKE ROHERER
JAMES H. DREW CORP.
P.O. BOX 621
SEDALIA, MO 65302

Re: MHTD J0Q2151

Gentlemen:

We are pleased to offer the following value engineering proposal. We feel this proposal will reduce project cost and decrease time required to complete the project.

Our proposal changes pipe sizes for the DMS posts from 12" std to 8" std and 10" std pipe. Our proposal calls for constant diameter pipe and includes design calculations.

Our original quote for the (12) DMS posts was $3800.00/each or $45,600.00. Our quote using material sizes submitted in our proposal would be (12) DMS posts @ $2800.00/each or $33,600.00. Savings for this proposal would be $12,000.00 This proposal was submitted on job J6Q2102, Routes I-70 and I-44 and was accepted. Due to the short completion time on this project, a response must be received within 10 days. It is our understanding that if accepted, the contractor would be paid 50% of the savings per section 104.6.3.2 of the Missouri Specifications.

Please forward this to the proper authorities and notify us of their decision concerning acceptability. You prompt attention to this matter would be appreciated.

Sincerely,
HURTT FABRICATING CORP.

Robert M. Walton, Jr., General Manager

RMW:je

COWELL
ENGINEERING
STRUCTURAL ENGINEERS

Structural Calculations For:

MoDot DMS Support
MO
Project No.: 07059

STATE OF MISSOURI
TIMOTHY D. CAVENY
NUMBER
PE-2004000651
PROFESSIONAL ENGINEER
5/8/07

THE PERSONAL SEAL AFFIXED TO THIS SHEET INDICATES THAT THE PROFESSIONAL ENGINEER WHOSE NAME APPEARS THEREON HAS PREPARED OR HAS DIRECTED THE PREPARATION OF THESE STRUCTURAL CALCULATIONS. OTHER DRAWINGS AND DOCUMENTS NOT EXHIBITING THIS SEAL SHALL NOT BE CONSIDERED PREPARED BY OR THE RESPONSIBILITY OF THE UNDERSIGNED.

3008 Sutton Boulevard
Saint Louis, Missouri 63143
314.644.4002 OFFICE
314.644.1988 FAX
www.cowelleng.com

COWELL ENGINEERING
STRUCTURAL ENGINEERS

PROJECT: Mo Dot DMS Support
CLIENT: Huth Fab
BY TDC DATE 5/3/07 W.O.# 07059
CHECK _____ DATE _____ SHEET 1 OF _____

DESIGN Summary

WIND LOAD - PER AASHTO Luminaires 4th Ed.

Cd = 1.7 VMS SIGNS

Cd = 1.1 STRUCTURE

COLUMNS - 24' STRUCTURE

10 3/4" O.D. x .365"

f_y = 42 ksi

14' - 10" STRUCTURE

8 5/8" x 0.322"

f_y = 42 ksi

COWELL ENGINEERING
STRUCTURAL ENGINEERS

PROJECT: MoDot DMS Support
CLIENT: Hurtt fab
BY: [illegible] DATE: 5/3/07 W.O.# 07059
CHECK: DATE: SHEET 2 OF

SIGN SIZE 6'-8¾" x 20'-8¼

WIND PRESSURE PER 4th Ed Luminaires

$q_w = 0.00256(90)^2(1.14)(.94) = 22.2$ psf

Sign $= 22.2(1.7) = 38$ psf

COL $= 22.1(1.1) = 24$ psf

Wt of SIGN = 2150#

COLUMN DESIGN ($h = 16'-11'' + 7' = 24'$)

Group I

$P_{DL} = \frac{2150}{2} + 24(50) = 2275$ $e = \frac{10.75}{2} + 3 + 6 = 14.38''$

$M_{DL} = (2150/2)(14.38'') = 15,459$ in-lbs $= 1288$ ft-lbs

COWELL ENGINEERING
STRUCTURAL ENGINEERS

PROJECT: Mo Dot DMS Support
CLIENT: Hault fab
BY TDL DATE 5/3/07 W.O.# 07059
CHECK _____ DATE _____ SHEET 3 OF _____

GROUP II CASE I

$P_{DL} = 2275$

$V_w = 38\,psf\,(6.75 \times 21)/2 = 2693$

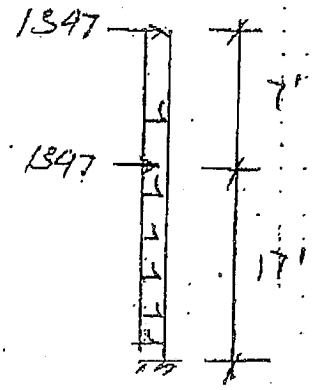

$M_w = 1347^{\#}(17+24) + 24(24)^2/2 = 62{,}139$

$2M_w = 12{,}428\ ft\text{-}Lbs$

$M_{tot} = \sqrt{63{,}427^2 + 12428^2} = 64{,}633\ ft\text{-}Lbs$

$S_{min}\ R_{BRD} = \dfrac{64{,}633 \times 12}{.66\,(42{,}000)\,4/3} = .21\ in^3$

Try 10" STD - $A = 11.91\ in^2$ $S = 29.9$ $R = 3.67$

$D/t = 10.75/.365 = 29.4 < \lambda_p = 86.93$

$f_b = .66 f_y = .66(42)\,4/3 = 36.95$ $f_b = \dfrac{64{,}633\,(12)}{29.9} = 25{,}940$

$\dfrac{kl}{r} = \dfrac{2.1(288)}{3.67} = 164 > C_c = 116.7$

$F_a = \dfrac{12\pi^2\,29E6}{23(164)^2} = 5552.2\,psi$ $f_a = \dfrac{2275}{11.91} = 191\ psi$

$F_v = .33(42) = 13.86$ $f_v = 188.4\ psi$

$CSR = \dfrac{191}{5552} + \dfrac{25{,}940}{36{,}950} + \left(\dfrac{230}{13{,}860}\right)^2 = 0.750$

COWELL ENGINEERING
STRUCTURAL ENGINEERS

PROJECT: MoDot Dms Support
CLIENT: Hurth Fab
BY TDC DATE 5/3/07 W.O.# 07051
CHECK _____ DATE _____ SHEET 4 OF _____

GROUP II CASE 2

$P_{DL} = 2275$

$.6V_w = 2693(.6) = 1615.8$ $.3V_w = 808$

$.6M_w = 62139(.6) = 37,284$ $.3M_w = 18641.7$

$M_{tot} = \sqrt{38,372^2 + 18642^2} = 42,841$ < 63,370

$V_{tot} = \sqrt{1615.8^2 + 808^2} = 1806$ (Load case will not control)

Group III CASE 1 ($\frac{1}{2}$W + ICE + DL)

ICE LOAD $= 3psf(21' \times 6.75') + 2(21+6.75)3 = 592^{\#}$

$P_{DL+ICE} = 2275 + \frac{592}{2} + 203 = 2774^{\#}$

$f_a = \frac{2774}{11.91} = 233$ psi $\frac{f_a}{F_a} = 0.04$ while $\frac{f_b}{F_b}$ decreases by 50%

∴ Will not control.

Group III CASE 2

By observation will not control.

USE $10\frac{3}{4} \times .365$
$F_y = 42$ ksi min

COWELL ENGINEERING
STRUCTURAL ENGINEERS

PROJECT: Mo Dot DMS Support
CLIENT: Hurth Fab
BY: Doc DATE: 5/13/07 W.O.# 07059
CHECK: DATE: SHEET 5 OF

COLUMN DESIGN (h = 7'-10" + 7 = 14.83

GROUP II CASE 1 WILL Control.

$P_{DL} = 2275$ $M_{DL} = 15,459$

$V_W = 2693^{\#}$ $.2V_W = 539^{\#}$

$M_W = 1347(7.833 + 14.833) = 30,532$ $.2M_W = 6106$

$M_{tot} = \sqrt{31,820^2 + 6106^2} = 32,401$ ft-Lbs

$S_{REQD} = \frac{32,401(12)}{.66(42,000)(4/3)} = 10.52$

Try 8" STD - $A = 8.4$ $S = 16.81$ $R = 2.94$

$D/t = 8.625/.322 = 26.79 < 86.9 = \lambda_p$

$\frac{kl}{r} = \frac{2.1(14.83 \times 12)}{2.94} = 127 > C_c = \sqrt{\frac{2\pi^2 E}{42}} = 116.7$

$f_a = \frac{12\pi^2 E}{23(127)^2} = 9.258$ ksi $f_a = \frac{2257}{8.4} = 268.7$

$f_B = .66(42)(4/3) = 36.95$ ksi $f_b = \frac{32,401(12)}{16.81} = 23,129$

$f_v = 13.86$ $f_v = \frac{2746.4}{8.4} = 327$ psi

8 5/8" O.D. X .322
42 ksi

$CSR = \frac{269}{9.258} + \frac{23,129}{36.95} + \left(\frac{327}{13,846}\right)^2 = 0.66 < 1.0$

COWELL ENGINEERING
STRUCTURAL ENGINEERS

PROJECT: MoDot DMS
CLIENT: Hurst fab
BY TDC DATE 5/8/07 W.O.# C7059
CHECK _____ DATE _____ SHEET 6 OF _____

ANCHOR ROD LENGTH #7 BARS

$$l_d = \frac{0.04(.60)(60000)}{\sqrt{3000}} = 26.29" + 18" = 44$$

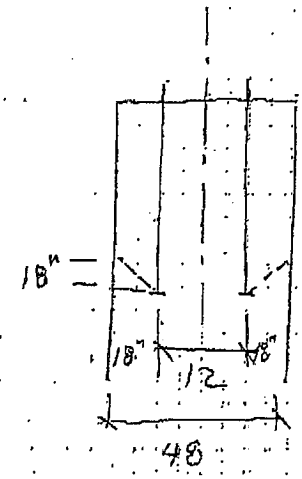

6'-0" Embed is adequate

CHECK WELD @ BASE

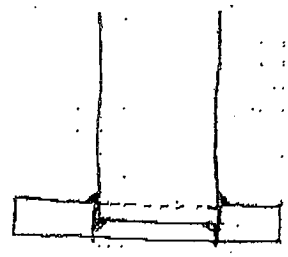

$$S_w = \frac{\pi d^2}{4}(2) = 181.52$$

$$R_{nw} = \frac{775{,}596 \text{ in-lbs}/1000}{181.52} = 4.27 \text{ k/in}$$

$$a_{REQ} = \frac{4.27 \text{ k/in}}{(.3)(60)(.707)(4/3)} = 0.252 + \text{GAP} \quad @ \ 10" \text{ PIPE}$$

$$S_8 = \frac{\pi\, 8.625^2}{4}(2) = 116.8$$

$$R_{nw} = \frac{32.4(12)}{116.8} = 3.33$$

$$a_{req} = \frac{3.33 \text{ k/in}}{(.3)(60)(.707)(4/3)} = 0.196" + \text{GAP}$$

COWELL ENGINEERING
STRUCTURAL ENGINEERS

PROJECT: Mo Dot DMS Support
CLIENT: Hutt fab
BY DC DATE 5/13/07 W.O.# 07059
CHECK _____ DATE _____ SHEET 7 OF _____

CHECK Deflection

Tall structure

$$\Delta = \frac{1347(288)^3}{3(29E6)(160.7)} + \frac{1347(204)^2}{6(29E6)(160.7)}(3 \times 288 - 204) =$$

$$\Delta = 2.3 + 1.323 = 3.62'' \quad \text{ok}$$

SHORT STRUCTURE:

$$\Delta = \frac{1347(177.9)^3}{3(29E6)(72.5)} + \frac{1347(194)^2}{6(29E6)(72.5)}(3 \times 178 - 94)$$

$$1.20 + 0.42' = 1.62''$$

8

RAM BasePlate V1.5
Cowell Engineering, LLC
MoDoT DMS
1 1/2" dia anchors

Detailed Design Results
5/ 8/07 10:33

CRITERIA:
Analysis
Maintain Strain Compatibility
Use full plate area for axial only compression load on plate.
Design
Use ASD 9th to check plate bending
Max concrete bearing per AISC J9.
Anchor Shear Check Per AISC Specifications.
Anchor Tension Check Per AISC Specifications.

INPUT DATA:

Column	
Column Size	HSS10.750X0.365
Dim: TW Depth	
(in) 0.340 10.75	
Base Plate	
Plate Fy (ksi)	36.000
N (Parallel to Web) (in)	18.000
B (Perpendicular to Web) (in)	18.000
Plate Thickness (in)	1.750
Anchor	
Anchor Size	1 1/2"
Anchor Area (in^2)	1.767
Anchor Material	Other
Anchor Modulus (ksi)	29000.00
Anchor Strength Fu (ksi)	75.00 ← GR-55 Bolts
Thread Included in Shear Plane	
Footing	
Footing Strength f'c (ksi)	3.00
Concrete Modulus (ksi)	3122.02
Dimension (Parallel to web) (ft)	4.00
Dimension (Perpendicular to web) (ft)	4.00
Design Load	
Building Code: - None -	
Load combination: Single Load Case	
Axial (kip)	2.50
Vx (kip)	2.00
Mx (kip-ft)	78.60
Allowable Stress Increase Factor	1.33

9

RAM BasePlate V1.5
Cowell Engineering, LLC
MoDoT DMS
1 1/2" dia anchors

Detailed Design Results
5/ 6/07 10:33

RESULTS:

Analysis

YBar (in)	5.87
Resultant Angle (°)	0.00

Plate Bending

Max bending moment from anchor/s #3 in tension

Allowable Stress Increase Factor	1.33
m [N-0.95d]/2.0 (in)	4.700
n [B-0.95b]/2.0 (in)	4.700
Controlling effective width to resist moment (in)	3.400
Controlling plate bending moment (kip-ft)	5.03
fb (ksi)	34.76
Fb (ksi)	35.91
fb/Fb	0.97
Thickness Required (in)	1.722

Thickness controlled by cantilever action.

Anchors

Anchor	X(in)	Y(in)	V(kip)	T(kip)	Interaction
1	6.00	6.00	0.50	0.00	0.02
2	6.00	-6.00	0.50	0.00	0.02
3	-6.00	-6.00	0.50	35.48	0.61
4	-6.00	6.00	0.50	35.48	0.61

Bearing

Eff Area of Support A2 (in^2)	1296.00
Plate Area A1 (in^2)	324.00
Sqrt(A2/A1)	2.00
Allowable Bearing Pressure (ksi)	2.79
Actual Bearing Stress (ksi)	1.39

DIAGRAM:

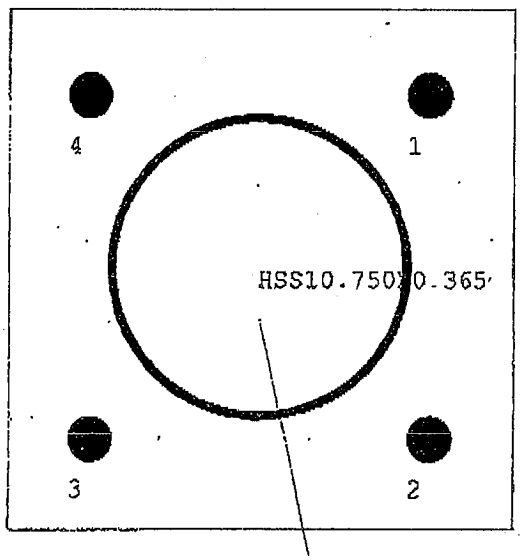

#	X(in)	Y(in)
1	6.000	6.000
2	6.000	-6.000
3	-6.000	-6.000
4	-6.000	6.000

PL 18.00 X 18.00 X 1.75 (in)
4 - 1 1/2" Other Anchor Bolts

10

RAM BasePlate V1.5
Cowell Engineering, LLC
MoDoT DMS 8" Col
1 1/2" dia anchors

Detailed Design Results
5/ 8/07 10:51

CRITERIA:
Analysis
Maintain Strain Compatibility
Use full plate area for axial only compression load on plate.
Design
Use ASD 9th to check plate bending
Max concrete bearing per AISC J9.
Anchor Shear Check Per AISC Specifications.
Anchor Tension Check Per AISC Specifications.

INPUT DATA:
Column
Column Size..... HSS8.625X0.322
Dim: TW Depth
(in) 0.300 8.63
Base Plate
Plate Fy (ksi) 36.000
N (Parallel to Web) (in)..... 18.000
B (Perpendicular to Web) (in)..... 18.000
Plate Thickness (in)..... 1.250
Anchor
Anchor Size..... 1 1/2"
Anchor Area (in^2)..... 1.767
Anchor Material..... Other
Anchor Modulus (ksi) 29000.00
Anchor Strength Fu (ksi) 75.00
Thread Included in Shear Plane
Footing
Footing Strength f'c (ksi) 3.00
Concrete Modulus (ksi) 3122.02
Dimension (Parallel to web) (ft)..... 4.00
Dimension (Perpendicular to web) (ft)... 4.00
Design Load
Building Code: - None -
Load combination: Single Load Case
Axial (kip)..... 2.50
Vx (kip)..... 2.00
Mx (kip-ft)..... 32.40
Allowable Stress Increase Factor 1.33

11

RAM BasePlate V1.5
Cowell Engineering, LLC
MoDoT DMS 8" Col
1 1/2" dia anchors

Detailed Design Results
5/ 8/07 10:51

RESULTS:

Analysis

YBar (in)	5.98
Resultant Angle (°)	0.00

Plate Bending

Max bending moment from anchor/s #3 in tension

Allowable Stress Increase Factor	1.33
m [N-0.95d]/2.0 (in)	5.550
n [B-0.95b]/2.0 (in)	5.550
Controlling effective width to resist moment (in)	5.100
Controlling plate bending moment (kip-ft)	3.03
fb (ksi)	27.41
Fb (ksi)	35.91
fb/Fb	0.76
Thickness Required (in)	1.092

Thickness controlled by cantilever action.

Anchors

Anchor	X(in)	Y(in)	V(kip)	T(kip)	Interaction
1	6.00	6.00	0.50	0.00	0.02
2	6.00	-6.00	0.50	0.00	0.02
3	-6.00	-6.00	0.50	14.27	0.25
4	-6.00	6.00	0.50	14.27	0.25

Bearing

Eff Area of Support A2 (in^2)	1296.00
Plate Area A1 (in^2)	324.00
Sqrt(A2/A1)	2.00
Allowable Bearing Pressure (ksi)	2.79
Actual Bearing Stress (ksi)	0.58

DIAGRAM:

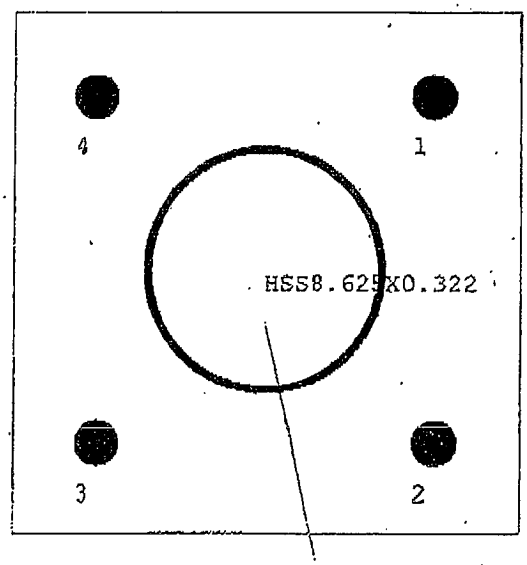

#	X(in)	Y(in)
1	6.000	6.000
2	6.000	-6.000
3	-6.000	-6.000
4	-6.000	6.000

PL 18.00 X 18.00 X 1.25 (in)
4 - 1 1/2" Other Anchor Bolts

COWELL ENGINEERING
STRUCTURAL ENGINEERS

PROJECT: MODOT DMS SUPPORT
CLIENT: Hutt fab
BY TDC DATE 4/25/07 W.O.# 07059
CHECK _____ DATE _____ SHEET 12 OF _____

SIGN SIZE 21' X 6.75'

$P_w = 51.9$ psf

$V_{tot} = 51.9\,psf(21' \times 6.75) = 7357^{\#}$

$R = 7357/4 = 1839.2$

$Wt = 2150$

$V_{DL} = \frac{2150}{4} = 538^{\#}$

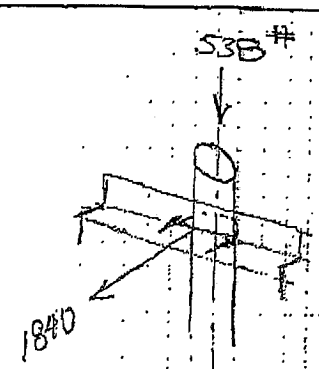

A-193-B8 (304 SS)

$f_t = 75$ ksi $f_y = 30$

$F_t = 0.3(75) = 22.5$ ksi
$F_v = .18(75) = 13.5$ ksi

from Table 10.32.3B

A 325 - Tallow = 38 ksi $38/105 = 0.36 F_u$
Vallow = 19 ksi $19/105 = 0.18 F_u$

Try 5/8" Φ BOLT. $A_b = .226$ (Tensile Area)

$f_t = (1840/2)/.226 = 4071$

$f_v = (588/2)/.226 = 1300.88$

USE MIN. 5/8" Φ U-BOLT
A-193-B8
(304 SS or EQUAL)

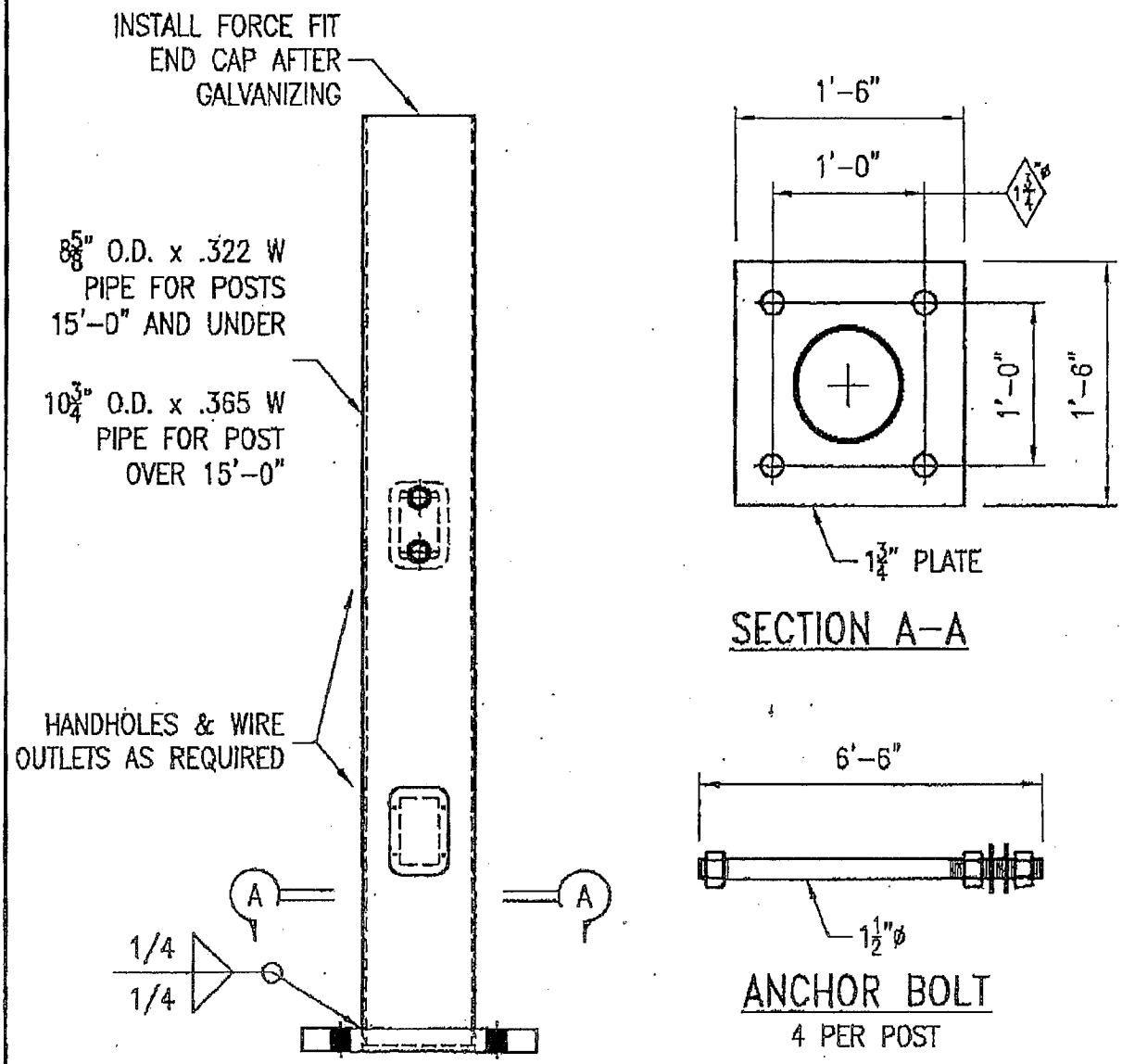

DMS POST
2 PER SITE

PIPE – 42 KSI MIN YIELD
PLATE – 36 KSI MIN YIELD
ANCHOR BOLTS 55 KSI MIN YIELD

STATE OF MISSOURI
TIMOTHY D. CAVENY
NUMBER
PE-2004000051
PROFESSIONAL ENGINEER

5/3/07

SHEET 1 OF 1

MISSOURI DMS PROPOSAL JOB: J6Q2102	HURTT FABRICATING CORP. MARCELINE, MO

Brian N Holt/D10/MODOT
04/17/2008 09:11 AM

To Brian A Williams/SC/MODOT@MODOT
cc
bcc
Subject Fw: J0Q2151 VE Proposal

History: This message has been replied to.

I forgot to include you in the original e-mail. Looks like we have concurnance from Bridge and I will proceed with forwarding the paperwork if you do not have any problems.

Brian Holt, PE
Resident Engineer
Kennett Office: 573-888-9138
Sikeston Office: 573-472-5325
Cell: 573-888-7035

----- Forwarded by Brian N Holt/D10/MODOT on 04/17/2008 09:10 AM -----

Thomas E Allen/SC/MODOT
04/17/2008 09:02 AM

To Troy A Pinkerton/SC/MODOT@MODOT, Dennis W Heckman/SC/MODOT@MODOT, Joseph G Jones/SC/MODOT@MODOT
cc Brian N Holt/D10/MODOT@MODOT, Craig D Compas/D10/MODOT@MODOT, Davar Divanbeigi/D6/MODOT@MODOT, Jason M Williams/D10/MODOT@MODOT, Lynelle S Luther/D10/MODOT@MODOT, Melissa A Wilbers/SC/MODOT@MODOT
Subject Re: J0Q2151 VE Proposal

Since this is being repeated- we need to incorporate this into our standards, instead of continuing to approve VECP's at 50/50 cost share.

Dennis- Bridge reviewed and approved drawings last summer. Please let us know who to work with to determine if, and how, to incorporate this into our policy.

TEA

Troy A Pinkerton/SC/MODOT

Troy A Pinkerton/SC/MODOT
04/17/2008 08:28 AM

To Thomas E Allen/SC/MODOT@MODOT
cc Brian N Holt/D10/MODOT@MODOT, Craig D Compas/D10/MODOT@MODOT, Davar Divanbeigi/D6/MODOT@MODOT, Jason M Williams/D10/MODOT@MODOT, Lynelle S Luther/D10/MODOT@MODOT, Melissa A Wilbers/SC/MODOT@MODOT
Subject Re: J0Q2151 VE Proposal

Also for everyone's benefit. The consultant designer for J6Q2102 had enough funds left over to produce the plans and specs for the D1 and D10 projects. We suggested that the consultant reconsider their design of the structure but they were not willing to put their PE stamp on that VE design. I am not a designer but suggest that what we have installed is more than adequate. The original is very difficult to fabricate (thus costly). I would support accepting the VE proposal even at a 50/50 savings.

Just wanted all to know how this is coming about since this is not the first time the same VE was proposed and approved.

Thanks.

You might look out for a similar proposal for the District 1 project?

Troy A. Pinkerton, P.E.
Traffic Liaison Engineer
Missouri Department of Transportation
Central Office - Traffic Division
Phone: 573.526.0123
Fax: 573.526.0120
Thomas E Allen/SC/MODOT

Thomas E Allen/SC/MODOT
04/16/2008 12:47 PM

To Brian N Holt/D10/MODOT@MODOT
cc Craig D Compas/D10/MODOT@MODOT, Jason M Williams/D10/MODOT@MODOT, Lynelle S Luther/D10/MODOT@MODOT, Troy A Pinkerton/SC/MODOT@MODOT, Melissa A Wilbers/SC/MODOT@MODOT, Davar Divanbeigi/D6/MODOT@MODOT
Subject Re: J0Q2151 VE Proposal

Brian- the VECP on J6Q2101 was approved (50/50 split) on 5/18/07. My understanding is that this project was for installing DMS's on I-70 & I-44. Davar Divanbeigi was the project manager.

Tom

Melissa A Wilbers/SC/MODOT

Melissa A Wilbers/SC/MODOT
04/16/2008 11:50 AM

To Brian N Holt/D10/MODOT@MODOT
cc Craig D Compas/D10/MODOT@MODOT, Jason M Williams/D10/MODOT@MODOT, Lynelle S Luther/D10/MODOT@MODOT, Thomas E Allen/SC/MODOT@MODOT, Troy A Pinkerton/SC/MODOT@MODOT
Subject Re: J0Q2151 VE Proposal

Here are the files I have from the Statewide DMS VE proposal

J6Q2102 VE POSTS.pdf DMS VE1.pdf DMS VE2.pdf DMS VE3.pdf DMS VE4.pdf DMS VE5.pdf

Let me know if you need anything else, Brian.

Thanks

Missy Wilbers, P.E.
Traffic Management and Operations Engineer
Missouri Department of Transportation
2211 St. Mary's Boulevard, Jefferson City, MO. 65102
Phone (573) 751-4006
Fax (573) 526-0120
Melissa.Wilbers@modot.mo.gov

"To dream anything that you want to dream, that is the beauty of the human mind. To do anything that you want to do, that is the strength of the human will. To trust yourself, to test your limits, that is the courage to succeed." ~ Bernard Edmonds

Brian N Holt/D10/MODOT

Brian N Holt/D10/MODOT
04/16/2008 11:22 AM

To Thomas E Allen/SC/MODOT@MODOT

cc Melissa A Wilbers/SC/MODOT@MODOT, Lynelle S Luther/D10/MODOT@MODOT, Jason M Williams/D10/MODOT@MODOT, Craig D Compas/D10/MODOT@MODOT

Subject J0Q2151 VE Proposal

Tom,

Would you please look at the attached VE. According to the contractor, a VE was previously submitted on another project, by another contractor but smame supplier, similiar to this project and was approved. Can you give me any information about the previous VE?

Dell Laser MFP 1815_20080415105522.pdf

Brian Holt, PE
Resident Engineer
Kennett Office: 573-888-9138
Sikeston Office: 573-472-5325
Cell: 573-888-7035

VALUE ENGINEERING CHECK SHEET

TYPE OF WORK

(Check one that applies)

- ☐ Bridge/Structure/Footings
- ☐ Drainage Structures (RCP, RCB, CMP's, ect.)
- ☐ TCP/MOT
- ☐ Paving (PCCP, ect.)
- ☐ Grading/MSE Walls
- X Signal/Lighting/ITS
- ☐ Misc. _____

SUMMARY OF PROPOSAL

(If needed, condense summary to a couple of lines)

This proposal has been previously approved on other projects. It replaces the planned 12" diameter pipe post to 8" and 10" diameters.

SCANNING OF DOCUMENT

If the proposal is large, please mark or make note, which pages need to be scanned into the database. If there are special instructions, make note of them here.

_____

_____

_____