Form C-104
Rev. 02/2009

VALUE ENGINEERING CHANGE PROPOSAL
MISSOURI DEPARTMENT OF TRANSPORTATION

☐ **Conceptual Proposal** ☒ **Final Proposal** **Date** January 28, 2010

Contract ID 091208-601 **Job No.** J6I0984

County St. Louis 70 **Original Bid Cost** $229,450,505.00

Contractor Massman, Traylor, Alberici **By** Richard C. Hoover

Designed By HNTB **Phone** 314 821-0042

VECP# 10-05 **(to be completed by C.O.)** **VECP** ☒ **or** **PDVECP** ☐

1. **Description of existing requirements and proposed change(s). Advantages/Disadvantages**
   The existing Pier 11 & 12 footings are 25-feet deep and contain 3,761,010 pounds or rebar. This VECP changes the footing depth for these piers to 20-feet and reduces the reinforcing steel to 3,176,765 pounds. The immediate advantage is a significant reduction in the cost of construction and a more efficient design enabling a cleaner rebar configuration to facilitate concrete placement. There is a long term advantage of a lower footing or substructure mass which can have a nominal improvement in the pier siesmic response. There are no apparent disadvantages.

2. **Estimate of reduction in construction costs.** $1,035,626.00

3. **Prediction of any effects the proposed change(s) will have on other department costs, such as maintenance and operations.**

   A preliminary assessment of the effects this Change Order may have on other Department costs indicate a negligable cost.

4. **Anticipated date for submittal of detailed change(s) of items required by Section 104.6 of the Specifications.**

   Included with this Form C-104
   (date)

5. **Deadline for issuing a change order to obtain maximum cost reduction, noting the effect of contract completion time or delivery schedule.**

   March 1 2010 (date) — No adverse effect on completion time or delivery schedule. (effect)

6. **Dates of any previous or concurrent submission of the same proposal.**

   None
   (date and/or dates)

Additional Comments:

**** Portion Below This Line To Be Filled Out by MoDOT ****

Comments:
This concept proposal provides for reduction in the Pier 11 & 12 footing depth from 25 ft. (plan) to 20 ft. This change will effect the labor, equipment and materials costs associated with Class B-1 Concrete (Line No 0920) and Reinforcing Steel (Line No 0930). Based on discussions with MoDOT's design consultant (HNTB), approval is recommended for this concept proposal. Final design and cost savings are currently under review.

Submitted By Resident Engineer — Date: 2/4/10

Comments:

☑ **Approval Recommended**
☐ **Rejection Recommended**

District Engineer — Date: 2/4/10

Comments:

☑ **Approval Recommended**
☐ **Rejection Recommended**

Federal Highway Administration
Required for FHWA Full Oversight Projects — Date: 2/10/10

Comments:

☑ **Approval**
☐ **Rejection**

State Construction and Materials Engineer — Date: 2·17·10

Distribution: **Resident Engineer, Project Manager, District Construction & Materials Engineer, State Construction & Materials Engineer, FHWA Value Engineering Administrator – MoDOT, P. O. Box 270, Jefferson City, MO 65102**

MTA

MASSMAN - TRAYLOR - ALBERICI

January 28, 2010
MTA - MODOT- 001

Missouri Department of Transportation
707 North Second Street, Suite 300
St. Louis, MO 63102

Attention: Mr. John V. Grana, Resident Engineer

Subject: Contract ID 091208-601
New Mississippi River Bridge, Route I-70, St. Louis City
MTA-VECP-01, Change in Pier 11 & 12 Footing Design

Gentlemen,

The bidding documents for this project allowed for Alternate Technical Concept (ATC) to be developed by the proposing contractor and reviewed for approval by the Owner and Owner's engineer. Massman, Traylor, Alberici, A Joint Venture (MTA) developed such an ATC for the drilled shaft foundation supporting Piers 11 and 12. This ATC, which was approved by the Owner (MoDOT) and Owner's engineer (HNTB), contained an alternate pier footing design which was not fully developed by the HNTB during the ATC process. Subsequent to bidding and being awarded the contract for this project, MTA revisited the ATC footing design for Piers 11 and 12, for possible Value Engineering Cost savings (VECP), and believes that several design changes can be made which will result in measured cost savings without significantly increasing the effort of the HNTB during the completion of the original ATC for this project.

The design changes anticipated by this VECP are 1) a reduction in the footing depth of Piers 11 & 12 from 25 feet to 20 feet, and 2) a corresponding reduction in the footing reinforcing steel by 20% or from 3,761,010 pounds to 3,167,765 pounds.

We have enclosed MoDOT Form C-104, Value Engineering Change Proposal, that details the information required for MoDOT to approve this VECP. We are available to discuss this proposal or provide you any additional information to facilitate your approval.

Sincerely,

MASSMAN, TRAYLOR, ALBERICI

Richard C. Hoover

Richard C. Hoover
Project Coordinator

Enclosure

8901 State Line • P.O. Box 8458 • Kansas City, MO 64114 • 816-523-1000 • (Fax) 816-333-2109

Operations

Cost Code		Description	QTY	UOM	Unit Price	Total
Pier 11 & 12 Drilled Shafts (Line Item 0890)						
22000		**Drilled Shafts Pier 11&12**				
221	00	**Original Drilled Shafts at Pier 11 & 12 Labor**				
	01	Unload Template & Spuds	20.00	TN	$29.56	591
	02	Unload Starter Casing	235.00	TN	$19.70	4,630
	03	Unload Perm Casing w/Bands	998.00	TN	$19.70	19,661
	04	Splice Permanent Casing 138"ID	30.00	EA	$2,756.23	82,687
	05	Splice Temporary Casing 156"ID	6.00	EA	$2,273.89	13,643
	06	Fab/Erect Template	20.00	TN	$844.48	16,890
	07	Mobilize Drill	1.00	LS	$32,155.20	32,155
	08	Setup Bentonite Slurry Plant	1.00	LS	$22,968.00	22,968
	09	Install Secondary Templates	12.00	EA	$1,477.84	17,734
	10	Install Starter Casing	12.00	EA	$1,477.84	17,734
	11	Unld/Hndl Bentonite	510,000.00	LB	$0.01	5,100
	12	Mix Bentonite	24.00	SH	$1,001.08	24,026
	13	Place Bentonite	24.00	SH	$1,001.08	24,026
	14	Auger To Rock @ 13'Dia	1,272.00	LF	$44.07	56,057
	15	Install Perm Casing Teeth	672.00	EA	$40.09	26,940
	16	Inst/Seat Perm Casing	12.00	EA	$1,671.85	20,062
	17	Reclaim Bentonite	12.00	EA	$1,001.08	12,013
	18	Assemble Core Drill System	1.00	LS	$29,841.00	29,841
	19	Drill Rock Socket 132"Dia	249.00	LF	$467.13	116,315
	20	Dispose of Spoil on Shore	4,100.00	CY	$3.42	14,022
	21	Airlift For TV/SID Inspect	12.00	EA	$1,655.32	19,864
	22	Setup/Place Tremie Concrete	3,630.00	CY	$11.87	43,088
	23	Airlift To Remove Laitance	12.00	EA	$827.66	9,932
	24	Remove Starter Casing	12.00	EA	$1,182.27	14,187
	25	Remove Secondary Templates	12.00	EA	$591.14	7,094
	26	Assist Diver Cut Casing	12.00	EA	$990.93	11,891
	27	Cutoff Casing In Cofferdam	12.00	EA	$781.26	9,375
	28	Trim Casing To Grade	12.00	EA	$390.63	4,688
	29	Clean Shaft Top	1,250.00	SF	$17.30	21,625
	30	Load Out Casing & Template	370.00	TN	$14.78	5,469
		Total Original Drilled Shaft Piers 11 & 12 - Labor				**704,308**
222	00	**VECP Drilled Shafts at Pier 11 & 12 Labor**				
	01	Unload Template & Spuds	20.00	TN	$29.56	591
	02	Unload Starter Casing	235.00	TN	$19.70	4,630
	03	Unload Perm Casing W/Bands	998.00	TN	$19.70	19,661
	04	Splice Permanent Csg 138"	30.00	EA	$2,756.23	82,687
	05	Splice Temporary Csg 156"	6.00	EA	$2,273.89	13,643
	06	Fab & Erect Template	20.00	TN	$844.48	16,890
	07	Mobilize Drill	1.00	LS	$32,155.20	32,155
	08	Setup Bentonite Slurry Plant	1.00	LS	$22,968.00	22,968
	09	Install Secondary Templates	12.00	EA	$1,477.84	17,734
	10	Install Starter Casing	12.00	EA	$1,477.84	17,734
	11	Unld/Hndl Bentonite	510,000.00	LB	$0.01	5,100
	12	Mix Bentonite	24.00	SH	$1,001.08	24,026
	13	Place Bentonite	24.00	SH	$1,001.08	24,026
	14	Auger To Rock @ 13'Dia	1,272.00	LF	$44.07	56,057
	15	Install Perm Casing Teeth	672.00	EA	$40.09	26,940
	16	Install & Seat Perm Casing	12.00	EA	$1,671.85	20,062
	17	Reclaim Bentonite	12.00	EA	$1,001.08	12,013
	18	Assemble Core Drill System	1.00	LS	$29,841.00	29,841
	19	Drill Rock Socket 132"Dia	249.00	LF	$467.13	116,315
	20	Dispose of Spoil on Shore	4,100.00	CY	$3.42	14,022
	21	Airlift For TV/SID Inspect	12.00	EA	$1,655.32	19,864
	22	Setup/Place Tremie Concrete	3,861.00	CY	$11.87	45,830
	23	Airlift To Remove Laitance	12.00	EA	$827.66	9,932
	24	Remove Starter Casing	12.00	EA	$1,182.27	14,187
	25	Remove Secondary Templates	12.00	EA	$591.14	7,094
	26	Diver Cut Casing	12.00	EA	$990.93	11,891
	27	Cutoff Casing In Cofferdam	12.00	EA	$781.26	9,375
	28	Trim Casing to Grade	12.00	EA	$390.63	4,688
	29	Clean Shaft Top	1,250.00	SF	$17.30	21,625
	30	Load Out Casing & Template	340.00	TN	$14.78	5,025
		Total VECP Drilled Shaft Piers 11 &12 - Labor				**706,606**
		Total Pier 11 & 12 VECP Direct Drilled Shaft Labor Cost Savings				**(2,298)**
224	00	**Original Material**				

Operations

Cost Code		Description	QTY	UOM	Unit Price	Total
	01	Buy Template Materials	20.00	TN	$3,000.00	60,000
	02	Buy Bag Bentonite	510,000.00	LB	$0.15	76,500
	03	Buy Tremie/Hopper	2.00	EA	$20,000.00	40,000
	04	Buy Auger 144"	1.00	EA	$35,000.00	35,000
	05	Buy Bucket 144"	1.00	EA	$45,000.00	45,000
	06	Buy Reverse Circulation Drill System	1.00	EA	$290,000.00	290,000
	07	Buy Airlift/Hoses	1.00	LS	$50,000.00	50,000
	08	Buy Frac Tanks	6.00	EA	$10,000.00	60,000
	09	Rigging Allownce	1.00	LS	$20,000.00	20,000
	10	Trucking	830.00	HR	$100.00	83,000
	11	Vacuum Truck	12.00	SH	$1,000.00	12,000
	12	Slurry Disposal Fee	12,670.00	CGL	$3.20	40,544
	13	Disposal Fee	450.00	LD	$50.00	22,500
	14	Buy Casing 156"ID x .625"	467,000.00	LB	$0.55	256,850
	15	Buy Casing 156"ID Freight	467,000.00	LB	$0.00	0
	16	Buy Casing 138"ID X1.00	1,991,830.00	LB	$0.522	1,039,735
	17	Buy Casing 138"ID Freight	0.00	LB	$0.00	0
	18	Buy Casing 138"ID Band	0.00	LB	$0.00	0
	19	Buy Casing Teeth Carbide	672.00	EA	$25.00	16,800
	20	Buy Casing Twister Slot	48.00	EA	$0.00	0
	21	Buy Class B2 Shaft Concrete	3,812.00	CY	$83.70	319,064
	22	Buy Cool Concrete	3,812.00	CY	$15.00	57,180
	23	Sell 156"ID x .625" Casing	467,000.00	LB	-$0.10	(46,700)
	24	Sell 138"ID Casing	740,000.00	LB	-$0.10	(74,000)
	25	Salvage Tools	1.00	LS	-$40,000.00	(40,000)
		Total Original Drilled Shaft Piers 11&12 - Material				**2,363,473**
224	00	**VECP Material**				
	01	Buy Template Materials	20.00	TN	$3,000.00	60,000
	02	Buy Bag Bentonite	510,000.00	LB	$0.15	76,500
	03	Buy Tremie/Hopper	2.00	EA	$20,000.00	40,000
	04	Buy Auger 144"	1.00	EA	$35,000.00	35,000
	05	Buy Bucket 144"	1.00	EA	$45,000.00	45,000
	06	Buy Reverse Circulation Drill System	1.00	EA	$290,000.00	290,000
	07	Buy Airlift/Hoses	1.00	LS	$50,000.00	50,000
	08	Buy Frac Tanks	6.00	EA	$10,000.00	60,000
	09	Rigging Allownce	1.00	LS	$20,000.00	20,000
	10	Trucking	830.00	HR	$100.00	83,000
	11	Vacuum Truck	12.00	SH	$1,000.00	12,000
	12	Slurry Disposal Fee	12,670.00	CGL	$3.20	40,544
	13	Disposal Fee	450.00	LD	$50.00	22,500
	14	Buy Casing 156"ID x .625"	467,000.00	LB	$0.55	256,850
	15	Buy Casing 156"ID Freight	467,000.00	LB	$0.00	0
	16	Buy Casing 138"ID X1.00	1,991,830.00	LB	$0.522	1,039,735
	17	Buy Casing 138"ID Freight	0.00	LB	$0.00	0
	18	Buy Casing 138"ID Band	0.00	LB	$0.00	0
	19	Buy Casing Teeth Carbide	672.00	EA	$25.00	16,800
	20	Buy Casing Twister Slot	48.00	EA	$0.00	0
	21	Buy Class B2 Shaft Concrete	4,055.00	CY	$83.70	339,404
	22	Buy Cool Concrete	4,055.00	CY	$15.00	60,825
	23	Sell 156"ID x .625" Casing	467,000.00	LB	-$0.10	(46,700)
	24	Sell 138"ID Casing	680,000.00	LB	-$0.10	(68,000)
	25	Salvage Tools	1.00	LS	-$40,000.00	(40,000)
		Total VECP Drilled Shaft Piers 11&12 - Material				**2,393,458**
		Total Pier 11 & 12 VECP Direct Drilled Shaft Material Cost Savings				**(29,985)**

Operations

Cost Code		Description	QTY	UOM	Unit Price	Total

Pier 11 & 12 Footing Concrete (Line Item 0920)

40000 Piers 11&12 Footing Concrete

Labor

401	00	**Original Pier 11 & 12 Footing Concrete - Labor**				
	01	Unload Steel Form	230.00	TN	$34.06	7,834
	02	Assemble Steel Form	14,873.00	SF	$5.32	79,124
	03	S/S Footing Forms	14,300.00	SF	$8.51	121,693
	04	S/S Strut Blockout Form	288.00	SF	$42.57	12,260
	05	S/S Strut Pourback Form	96.00	SF	$42.57	4,087
	06	Install Cooling Pipe	27,000.00	LF	$1.61	43,470
	07	Install/Maintain Cooling System	60.00	DY	$1,160.70	69,642
	08	Grout Cooling Pipe	27,000.00	LF	$1.09	29,430
	09	Place Footing Concrete	8,962.00	CY	$13.61	121,973
	10	Place Strut B/O Pourbacks	24.00	EA	$574.20	13,781
	11	Finish Concrete	7,304.00	SF	$3.56	26,002
	12	Cure Concrete	24,000.00	SF	$0.16	3,840
	13	P/P Concrete	14,300.00	SF	$1.19	17,017
	14	Const Joint Prep	2,376.00	SF	$2.15	5,108
		Total Original Pier 11 & 12 Footing Concrete - Labor				**555,261**
402	00	**VECP Pier 11 & 12 Footing Concrete - Labor**				
	01	Unload Steel Form	185.00	TN	$34.06	6,301
	02	Assemble Steel Form	11,900.00	SF	$5.32	63,308
	03	S/S Footing Forms	11,440.00	SF	$8.51	97,354
	04	S/S Strut Blockout Form	0.00	SF	$42.57	0
	05	S/S Strut Pourback Form	0.00	SF	$42.57	0
	06	Install Cooling Pipe	21,600.00	LF	$1.61	34,776
	07	Install/Maintain Cooling System	60.00	DY	$1,160.70	69,642
	08	Grout Cooling Pipe	21,600.00	LF	$1.09	23,544
	09	Place Footing Concrete	7,810.00	CY	$13.61	106,294
	10	Place Strut B/O Pourbacks	0.00	EA	$574.20	0
	11	Finish Concrete	7,304.00	SF	$3.56	26,002
	12	Cure Concrete	21,120.00	SF	$0.16	3,379
	13	P/P Concrete	11,440.00	SF	$1.19	13,614
	14	Const Joint Prep	2,376.00	SF	$2.15	5,108
		Total VECP Pier 11 & 12 Footing Concrete - Labor				**449,322**
		Pier 11 & 12 VECP Direct Concrete Labor Cost Savings				**105,939**

Material

404	00	**Original Pier 11 & 12 Footing Concrete - Material**				
	01	Buy Footing Forms	14,872.00	SF	$40.00	594,880
	02	Salvage Footing Form	14,872.00	SF	-$20.00	(297,440)
	03	Buy Form Hardware	14,300.00	SF	$0.60	8,580
	04	Buy Form Oil	14,300.00	SF	$0.05	715
	05	Buy Curing Material	23,980.00	SF	$0.10	2,398
	06	Buy Form Lumber	8.00	MF	$800.00	6,400
	07	Buy Plyform	4,000.00	SF	$1.25	5,000
	08	Buy P/P Matl	14,300.00	SF	$0.05	715
	09	Buy Curing Blankets	24,000.00	SF	$0.25	6,000
	10	Spray Foam Forms	15,000.00	SF	$1.50	22,500
	11	Buy Misc Temp Instruments	1.00	LS	$10,000.00	10,000
	12	Buy Misc Cooling Supplies	1.00	LS	$10,000.00	10,000
	13	Buy Class B1 Concrete	9,412.00	CY	$78.75	741,195
	14	Buy Class B1 Conc Cooling	9,412.00	CY	$15.00	141,180
	15	Buy Cooling Pipe	27,000.00	LF	$1.00	27,000
	16	Buy Cooling Grout	150.00	CF	$12.00	1,800
		Total Original Piers 11 & 12 Footing Concrete - Material				**1,280,923**
404	00	**VECP Pier 11 & 12 Footing Concrete - Material**				
	01	Buy Footing Forms	11,900.00	SF	$40.00	476,000
	02	Salvage Footing Form	11,900.00	SF	-$20.00	(238,000)
	03	Buy Form Hardware	11,440.00	SF	$0.60	6,864
	04	Buy Form Oil	11,440.00	SF	$0.05	572
	05	Buy Curing Material	21,120.00	SF	$0.10	2,112
	06	Buy Form Lumber	8.00	MF	$800.00	6,400
	07	Buy Plyform	4,000.00	SF	$1.25	5,000
	08	Buy P/P Matl	11,440.00	SF	$0.05	572
	09	Buy Curing Blankets	22,000.00	SF	$0.25	5,500

Operations

Cost Code		Description	QTY	UOM	Unit Price	Total
	10	Spray Foam Forms	12,000.00	SF	$1.50	18,000
	11	Buy Misc Temp Instruments	1.00	LS	$10,000.00	10,000
	12	Buy Misc Cooling Supplies	1.00	LS	$10,000.00	10,000
	13	Buy Class B1 Concrete	8,201.00	CY	$78.75	645,829
	14	Buy Class B1 Conc Cooling	8,201.00	CY	$15.00	123,015
	15	Buy Cooling Pipe	21,600.00	LF	$1.00	21,600
	16	Buy Cooling Grout	150.00	CF	$12.00	1,800
		Total VECP Piers 11 & 12 Footing Concrete - Material				**1,095,264**
		Pier 11 & 12 VECP Direct Concrete Material Cost Savings				**185,659**

Subcontracts

406	00	**Original Pier 11 & 12 Subcontracts**				
	01	Thermal Analysis	1.00	LS	$25,000.00	25,000
	02	Temp Monitoring Equip	1.00	LS	$20,000.00	20,000
	03	Site Services for Thermal Analysis	1.00	LS	$10,000.00	10,000
		Total Original Piers 11&12 Footing Concrete - Subcontracts				**55,000**
406	00	**VECP Pier 11 & 12 Subcontracts**				
	01	Thermal Analysis	1.00	LS	$25,000.00	25,000
	02	Temp Monitoring Equip	1.00	LS	$20,000.00	20,000
	03	Site Services for Thermal Analysis	1.00	LS	$10,000.00	10,000
		Total VECP Piers 11&12 Footing Concrete - Subcontracts				**55,000**
		Pier 11 & 12 Direct Concrete Subcontract Cost Savings				**0**

Pier 11 & 12 Shafts & Footings Reinforcing Steel (Line Item 0930)

60000 Piers 11&12 Substructure Reinforcing Steel

Labor

601	00	**Original Pier 11 & 12- Shafts & Footing Rebar - Labor**				
	01	Unload Resteel	1,881.00	TN	$3.44	6,471
	02	Transfer Steel To Barge	1,881.00	TN	$3.44	6,471
	03	Hook Service for Rebar Sub	1,881.00	TN	$68.73	129,281
	04	Set Shaft Resteel Cages	12.00	EA	$1,655.32	19,864
	05	Unload/Store Couplers	1,944.00	EA	$0.20	389
		Total Original Pier 11 & 12 Shafts & Footing Rebar & Couplers - Labor				**162,476**
602	00	**VECP Pier 11 & 12 - Shafts & Footing Rebar - Labor**				
	01	Unload Resteel	1,584.00	TN	$3.44	5,449
	02	Transfer Steel To Barge	1,584.00	TN	$3.44	5,449
	03	Hook Service for Rebar Sub	1,584.00	TN	$68.73	108,868
	04	Set Shaft Resteel Cages	12.00	EA	$1,655.32	19,864
	05	Unload/Store Couplers	1,795.00	EA	$0.20	359
		Total VECP Pier 11 & 12 - Shafts & Footing Rebar & Couplers - Labor				**139,989**
		Total Pier 11 & 12 VECP Direct Rebar Labor Cost Savings				**22,487**

Material

604	00	**Original Pier 11 & 12 Shafts & Footing Rebar - Material**				
	01	Barge Steel	1.00	LS	$25,000.00	25,000
	02	Buy Support Steel	200,000.00	LB	$0.40	80,000
		Total Original Pier 11 12 Shafts & Footing Rebar & Couplers - Material				**105,000**
604	00	**VECP Pier 11 & 12 Shafts & Footing Rebar - Material**				
	01	Barge Steel	1.00	LS	$21,000.00	21,000
	02	Buy Support Steel	168,000.00	LB	$0.40	67,200
		Total VECP Pier 11 12 Shafts & Footing Rebar & Couplers - Material				**88,200**
		Total Pier 11 & 12 VECP Direct Rebar Material Cost Savings				**16,800**

Cost Code		Operations Description	QTY	UOM	Unit Price	Total
Subcontracts						
606	00	**Original Shafts & Footing Rebar - Subcontracts**				
	01	Furnish & Install Black Resteel (Tarrasco)	3,761,010.00	LB	$0.688	2,587,575
	02	Furnish & Place #18 Position Couplers (Tarrasco)	480.00	EA	$134.00	64,320
	03	Furnish & Place #6 Rebar Couplers (Tarrasco)	2,928.00	EA	$32.64	95,570
	04	Furnish Black Accessories	3,761,010.00	LB	$0.04	150,440
		Total Original Pier 11 & 12 Shafts & Footing Reinforcing Steel & Couplers - Subcontract				**2,897,905**
606	00	**VECP Shafts & Footing Rebar - Subcontracts**				
	01	Furnish & Install Black Resteel (Tarrasco)	3,167,765.00	LB	$0.688	2,179,422
	02	Furnish & Place #18 Position Couplers (Tarrasco)	432.00	EA	$134.00	57,888
	03	Furnish & Place #6 Rebar Couplers (Tarrasco)	2,635.00	EA	$32.64	86,006
	04	Furnish Black Accessories	3,167,765.00	LB	$0.04	126,711
		Total VECP Pier 11 & 12 Shafts & Footing Reinforcing Steel & Couplers - Subcontracts				**2,450,027**
		Total Pier 11 & 12 VECP Direct Subcontract Cost Savings				**447,878**

VECP Cost Summary

Subtotal Direct Cost Labor Savings				**126,128**	(2,298) + 105,959 + 22,487
Workmens Compensation	126,128.00	$	$0.1200	15,135	
Payroll Taxes	126,128.00	$	$0.1195	15,072	
General Liability Insurance	126,128.00	$	$0.0200	2,523	
Fringes on Concrete Labor	185,659.00	$	$0.5581	103,616	
Fringes on Resteel Labor	22,487.00	$	$0.7958	17,895	
Subtotal Labor plus Burden				280,369	
Section 109.5 Markup	280,369.00	$	$0.2000	56,074	
Total VECP Labor				**336,443**	
Subtotal Direct Cost Material Savings				**172,474**	(29,985) + 185,659 + 16,800
Section 109.5 Markup	172,474.00	$	$0.2000	34,495	
Total VECP Material				**206,969**	
Subtotal Direct Cost Subcontracts Savings				**447,878**	0 + 447,878
Section 109.5 Markup	447,878.00	$	$0.0500	22,394	
Total VECP Subcontracts				**470,272**	
Subtotal Direct Equipment Operating Exspense Sav	1.00	LS	18,285.00	18,285	FROM SUMMARY SHEET
Section 109.5 Markup	18,285.00	$	$0.2000	3,657	
Total VECP Equipment Savings				**21,942**	
Total VECP Savings				**1,035,626**	

MASSMAN CONSTRUCTION CO.
8901 State Line Road, Suite 240, P.O. Box 8458
Kansas City, MO 64114-0458
816-523-1000
Fax 816-333-2109
massman@massman.net

JOB: MRB - VELP
SHEET NO. 1 OF 4
CALCULATED BY: TKJ DATE: 1/27/10
CHECKED BY: DATE:
SCALE:

Footing Concrete 55 x 88 x 25 ATC

Forms (Wall)

ATC: (55+88) x2 x25 = 7150 #/EA x2 = 14300 #

Rev to 20' $\frac{20}{25}$ x 7150 = 5720 #/EA x2 = 11440 #

Conc.

ATC (55x88x25)/27 = 4881 cyd/ea x2 = 8963 cyd
Buy +5% 9412 cyd

Rev to 20': $\frac{20}{25}$ x 4881 = 3904.8 cyd EA x2 = 7810 cyd
Buy +5% 8201 cyd

Add back Shafts
$\left(\frac{\pi \times 11.5^2}{4} \times 5 \times 6\right)/27$ = 115.4 cyd/Ea x2 = 231 cyd
Buy +5% 243

8041 Place
8444 Buy

Cure

ATC 7150 + (88x55) = 11990 #/pier x2 = 23980 #

Rev To 20' 5720 + (88x55) = 10560 #/pier x2 = 21120 #

Grading Pipe

ATC: 13500 LF/pier x2 = 27000 LF

Rev $\frac{20}{25}$ 13500 = 10800 LF/pier = 21600 LF

Forms

ATC: 31 #/SF 4% waste 14300 # x1.04 = 14872 #
(14872 x 31)/2000 = 230 Ton

Rev: 11440 # x1.04 = 11898 #
(11898 x 31)/2000 = 185 Ton

MASSMAN CONSTRUCTION CO.
P.O. BOX 8458
KANSAS CITY, MO 64114-0458
816-523-1000
FAX: 816-333-2109
massman@massman.net

JOB: MRB - VECP
SHEET NO. 2 OF 4
CALCULATED BY: FKO DATE: 1/27/10
CHECKED BY: DATE:
SCALE:

VECP Savings (FTG Rebar) Item 5304

Ftg Rebar ATC
1,483,112 #/FTG x 2 = 2966225

Shaft Rebar ATC
Total Per 11 & 12 = 794785

Total ATC Rebar 3,761,010 #
3761010 / 2000 = 1881 TON

VECP Design change to reduce overall FTG Rebar weight by a maximum of 20%, change main bars 7 to 8 and increase spacing and size of shear steel

∴ Assume 20% Reduction in FTG Steel 0.20 x 2966225 = 593245 #
593245 / 2000 = 297 TON

Couplers
ATC
#11 Couplers 972 / FTG = 1944 EA

8% Reduction
1944 x 0.92 = 1795 EA

MASSMAN CONSTRUCTION CO.
8901 State Line Road, Suite 240, P.O. Box 8458
Kansas City, MO 64114-0458
816-523-1000
Fax 816-333-2109
massman@massman.net

JOB MRB -VECP
SHEET NO 3 OF 4
CALCULATED BY FKJ DATE 1/27/10
CHECKED BY DATE
SCALE

EQUIPMENT OPERATING EXPENSE (EOE)

(EOE Extracted from each affected Bid Item)

Line Item	Estimate ITEM	TOTAL Quantity	TOTAL EOE	Revised Quantity	Revised EOE	Δ
0890	530B	732 LF	17,563	792 LF	19,003	1440
0920	530K	8963 cyd	77,113	8201 cyd	70557	<6556>
0930	530L	376/010 lb	83484	3,167,765 lb	70315	<13169>
		TOTAL EOE SAVINGS				18285

QUANTITY ESTIMATE

MASSMAN CONSTRUCTION CO.

RR I70 BID DATE

530 L 550

ATC BID ITEM DESCRIPTION

REER. 11/12 FOUND. REINFORCING

MTA - VECP 4 of 4

Sheet ___ of ___ Estm. W&P. ITEM 530L

Plan Sheet No. ___ Bid Quantity 3761010 #

Spec. Ref. ___ Take-off Quantity ___

DETAIL	L	W	H	CY	# REIN	AVG
					TOTAL 6,789,000	
NAN PER PLANS				4	(794785) SHAFTS	
				12	(296025) "	
				5/7	1,545	5,178,000	416 #/CY

MTA ATC

530L 1-4

Drilled Shaft - 794785 #

FTG 2961025 #

3,761,010 #

Set Cross-Shafts 12 ea

9.31 4 22/23/24 FTG Reinforcing

2 39/40/41/42 Shaft

PW 24015/16/17

S 24010/11

D 24025

Keith Jacobson

From: Robert Bittner [rbb@bittner-shen.com]
Sent: Thursday, December 31, 2009 11:21 AM
To: Keith Jacobson
Subject: FW: MHTC awards main span contract for I-70 Bridge

Keith,
Here is my correspondence with AB regarding their release of BSCE.

Robert B. Bittner, P.E.

Bittner-Shen Consulting Engineers, Inc.
921 SW Washington St. Suite 765
Portland, Oregon 97205

Tel: 503-766-3199 Direct: 503-766-3562
Cell: 503-926-4360 Fax: 503-922-0105
www.bittner-shen.com

From: Cegelis, Mike [mailto:Mcegelis@americanbridge.net]
Sent: Wednesday, December 30, 2009 7:44 PM
To: Robert Bittner
Subject: RE: MHTC awards main span contract

No problem with that at all Bob,

Good luck, and best wishes for a great new year>

Best,

Michael Cegelis
American Bridge Co.

From: Robert Bittner [mailto:rbb@bittner-shen.com]
Sent: Wednesday, December 30, 2009 5:50 PM
To: Cegelis, Mike
Subject: FW: MHTC awards main span contract

Mike,
Would American Bridge have any objection to BSCE contacting the Massman-Traylor JV to see if we can do any engineering for them on this project? We will make sure not to disclose any information we have received from AB.

Bob

Bittner-Shen Consulting Engineers, Inc.
921 SW Washington St. Suite 765
Portland, Oregon 97205

Tel: 503-766-3199 Direct: 503-766-3562
Cell: 503-926-4360 Fax: 503-922-0105
www.bittner-shen.com

From: Mississippi River Bridge Public Involvement [mailto:updates@riverbridgeupdates.ccsend.com] **On Behalf Of** Mississippi River Bridge Public Involvement
Sent: Wednesday, December 30, 2009 10:41 AM
To: rbb@bittner-shen.com
Subject: MHTC awards main span contract

MHTC awards main span contract for Mississippi River Bridge

Press Release

MHTC awards contract for Mississippi River Bridge main span

ST. LOUIS - This morning, the Missouri Highway and Transportation Commission awarded the Mississippi River Bridge main span contract to a joint venture from Massman Construction/Traylor Brothers/Alberici Constructors for $229.5 million.
The decision was made with concurrence from the Illinois Department of Transportation.

"We're excited to be moving forward with this needed project," said Kevin Keith, P.E., the Missouri Department of Transportation's Chief Engineer. "The important thing to remember is this bridge dramatically improves safety, relieves congestion on the Poplar Street Bridge and provides alternate routes through the region. Additionally, the overall bridge project will promote economic growth regionally."

The lowest bid for the main span contract was about $39 million higher than expected. Additional funding comes from savings on the overall river bridge project, $11 million from the I-64 construction project and bond savings.

"We anticipate some significant savings on the remaining portions of the project from innovative value engineering concepts," said Gregory Hom, P.E., Mississippi River Bridge project director. "These concepts helped us design a bridge that met the regional requirements for traffic flow and safety, while providing excellent value to the taxpayers of Missouri and Illinois."

The Disadvantaged Business Enterprise (DBE) goal for the new Mississippi River Bridge main span is 18 percent. This aggressive goal means approximately 18 percent of the money the prime contractor gets for the project - more than $41 million - will be paid to minority- or woman-owned businesses. This goal is based on the availability and willingness of certified DBE companies to accomplish certain tasks on the project. Since the construction of the main span is very specialized, the goal required the contractor to be innovative and expand their use of DBE companies. Additionally, MoDOT and IDOT have included a possible $3.5 million incentive to encourage the contractor to be socially and environmentally responsible, with the desire that this will increase overall diversity throughout the project.

###

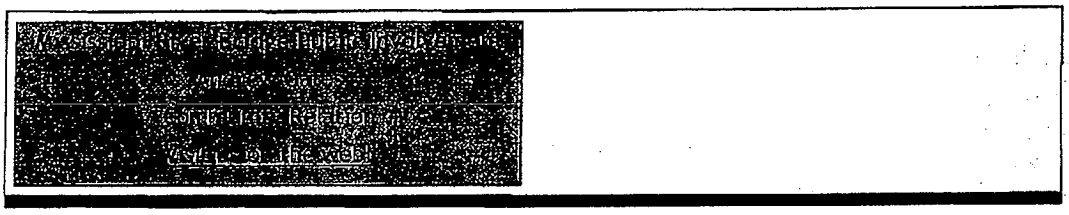

Forward email

Email Marketing by

This email was sent to rbb@bittner-shen.com by andrew.gates@modot.mo.gov.
Update Profile/Email Address | Instant removal with SafeUnsubscribe™ | Privacy Policy.
Mississippi River Bridge Public Involvement | 707 N. 2nd Street | St. Louis | MO | 63102

Keith Jacobson

From: Robert Bittner [rbb@bittner-shen.com]
Sent: Monday, January 04, 2010 12:10 PM
To: Keith Jacobson
Cc: ls@bittner-shen.com
Subject: RE: I-70 MRB - BSCE ATC Package for Piers 11 & 12
Attachments: PMB N1 Footing Rebar 010.JPG; N1 Dewatered Cofferdam #1.JPG; N1 Dewatered Cofferdam #3.JPG; Cofferdam N1 in the Sound.JPG

Keith,
Here are a few photos of the float-in cofferdam we designed for the Kiewit-Flatiron JV working on the Port Mann Bridge up in Vancouver, BC, Canada. It is essentially the same concept we are proposing for I-70. The major difference with the Port Mann Bridge Cofferdam is that it is a "float-in cofferdam" where the I-70 will be built above and then lowered. We were able to float-in on Port Mann because the site was tidal and water levels where within a fairly predictable range.
Bob

Bittner-Shen Consulting Engineers, Inc.
921 SW Washington St. Suite 765
Portland, Oregon 97205

Tel: 503-766-3199 Direct: 503-766-3562
Cell: 503-926-4360 Fax: 503-922-0105
www.bittner-shen.com

From: Robert Bittner [mailto:rbb@bittner-shen.com]
Sent: Thursday, December 31, 2009 10:40 AM
To: 'Keith Jacobson'
Cc: 'ls@bittner-shen.com'
Subject: I-70 MRB - BSCE ATC Package for Piers 11 & 12

Keith,
Here is the ATC Submittal that BSCE prepared for AB. You will note that we have eliminated the seal with our approach. This will eliminate over 4,000 CY of seal concrete from your design of Piers 11 & 12, and significantly reduce seismic loadings into the foundation. We would be interested in designing the cofferdam for your solution.

Additionally, if we have the opportunity to work with your pile cap designer (as consultants), we believe we could significantly reduce the quantity of reinforcing steel in your pile caps. (See the quantity of reinforcing steel in our pile caps.) We would also recommend from a constructability standpoint using headed #18 bars rather than the mass of #11 bars shown on your drawings. (We used this concept for the main pier foundations on the Cooper River Bridge.)

Robert B. Bittner, P.E.

Bittner-Shen Consulting Engineers, Inc.
921 SW Washington St. Suite 765
Portland, Oregon 97205

Tel: 503-766-3199 Direct: 503-766-3562
Cell: 503-926-4360 Fax: 503-922-0105
www.bittner-shen.com

From: Keith Jacobson [mailto:kjacobson@massman.net]
Sent: Thursday, December 31, 2009 9:29 AM
To: Robert Bittner
Subject: FW: MRB ATC Revisions

Bob,

Attached you will find copies of our ATC concept. We are interested in any potential cofferdam, footing and/or seal changes that will be cost effective. After you review these drawings and if you see potential savings or advantage please contact me.

Thanks,

F. Keith Jacobson
Vice President
Massman Construction Co.
816 523-1000 (O)
816 806-4901 (C)

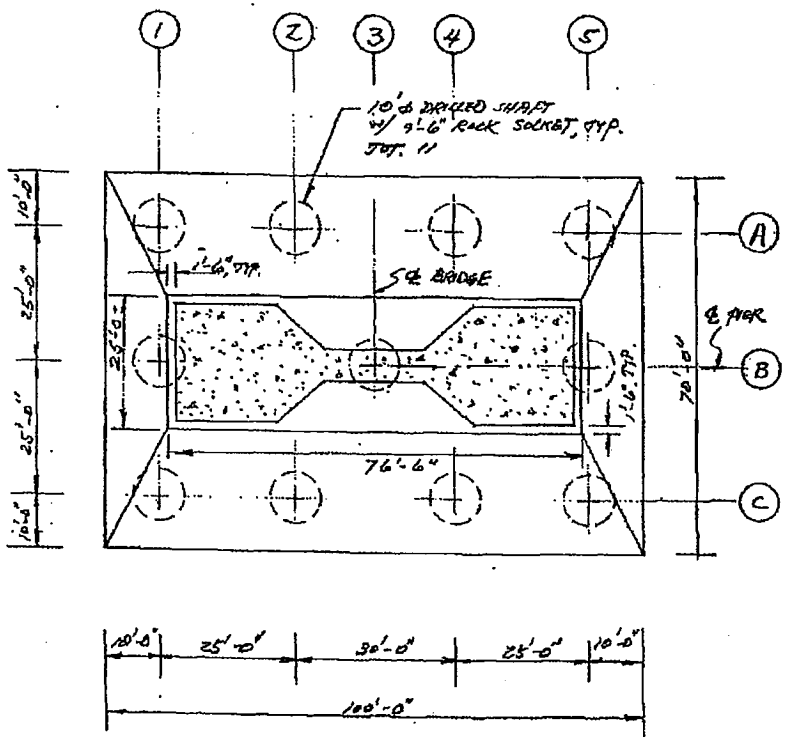

FOUNDATION PLAN
(PIERS 11 & 12)
1" = 20'

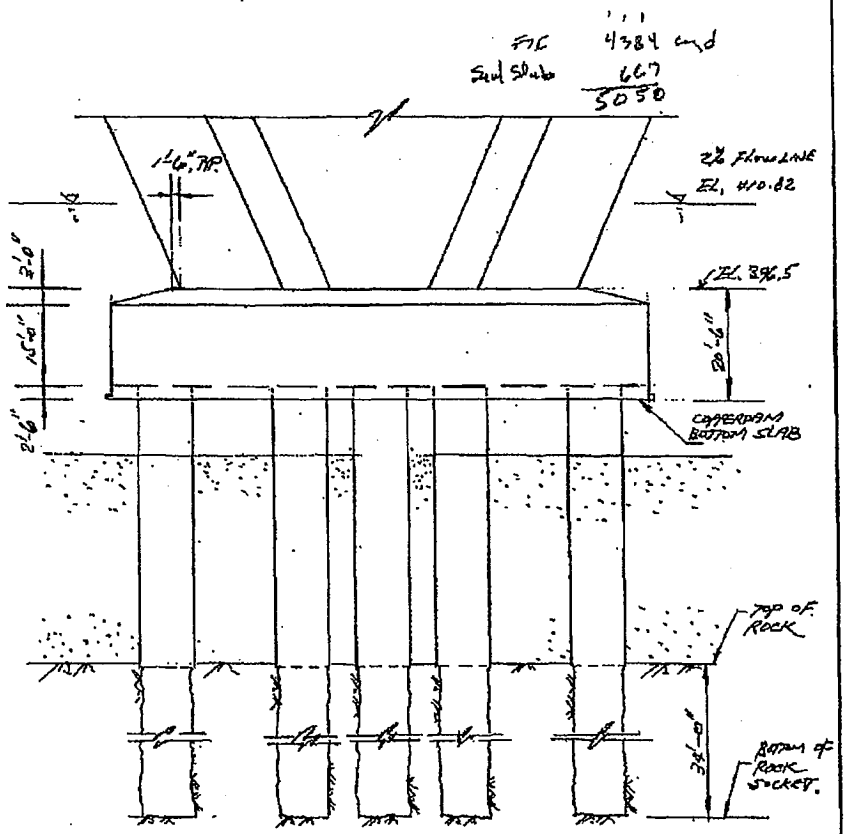

ELEVATION
1" = 20'

BITTNER-SHEN Consulting Engineers, Inc. 921 SW Washington St., Suite 765 Portland, OR 97205	Job No 2009-20	Page 1 of 8	
	Project I-70 BRIDGE ACROSS THE MISSISSIPPI RIVER AT ST. LOUIS	Design LS	
		Date 5/6/07	
	Subject PIERS 11 & 12 FOUNDATION LAYOUT	Checked RBB	
		Date 5-06-07	

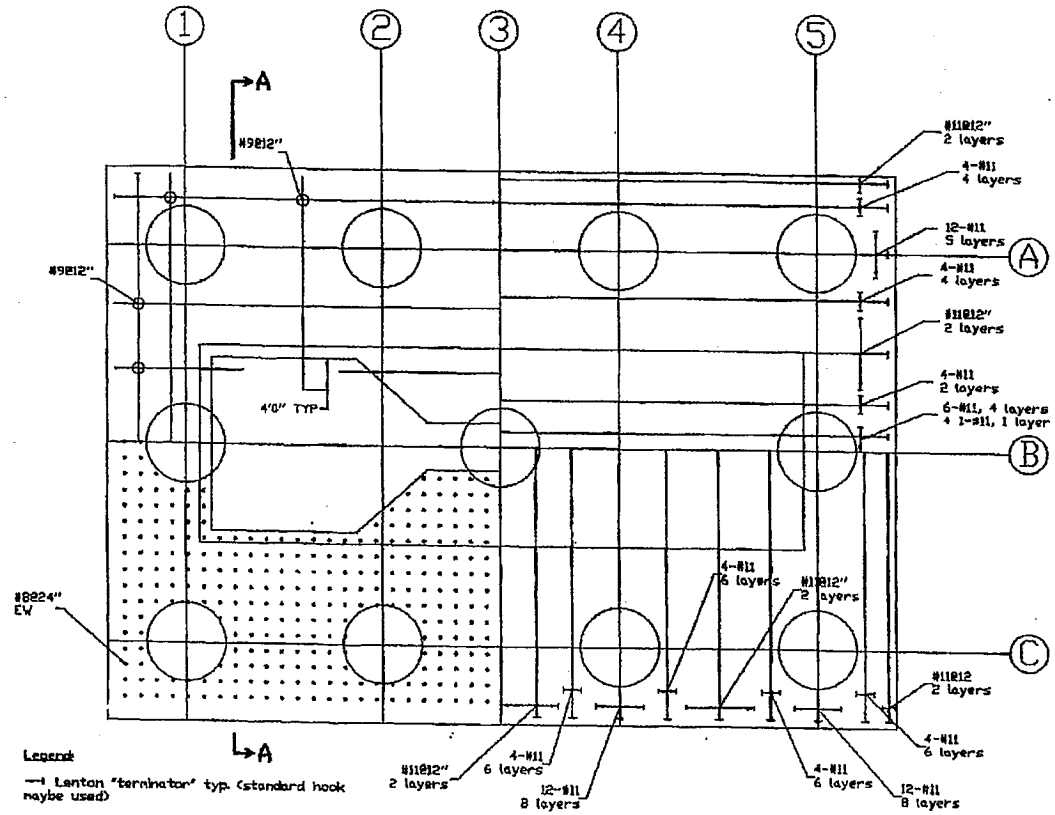

PLAN

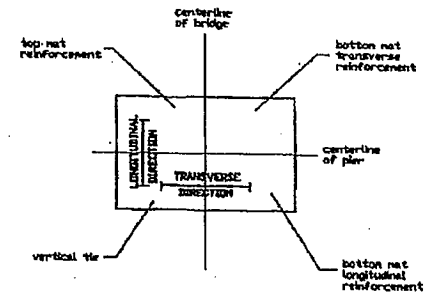

KEY PLAN

NOTES:

1. FOOTING CONCRETE f_c'=5 ksi.
2. REINFORCEMENT f_y = 60 ksi (ASTM A706).
3. REBAR TERMINATOR: ASTM A576.
4. BOTTOM MAT BAR SPLICES SHALL BE MECHANICAL CONNECTION.
5. THE CONNECTION OF THE REBAR TERMINATIONS TO THE REINFORCING STEEL SHALL MEET FULL TENSION SPLICE REQUIREMENT OF DEVELOPING 125% f_y.

BITTNER-SHEN Consulting Engineers, Inc. 921 SW Washington St., Suite 765 Portland, OR 97205	Job No 2009-20	Page 3 of 8
	Project I-70 BRIDGE ACROSS THE MISSISSIPPI RIVER AT ST LOUIS	Design LS
		Date 8/17/09
	Subject PIERS 11 & 12 FOUNDATION FOOTING REINF. LAYOUT	Checked RBB
		Date 8/18/09

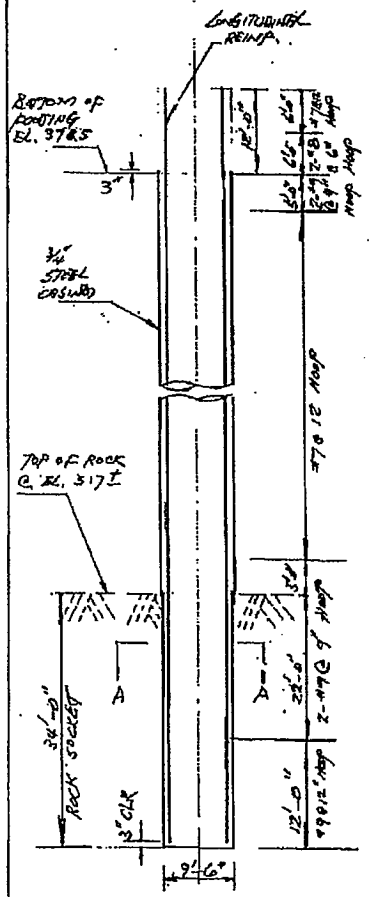

DRILLED SHAFT ELEV.
(PIER 11)

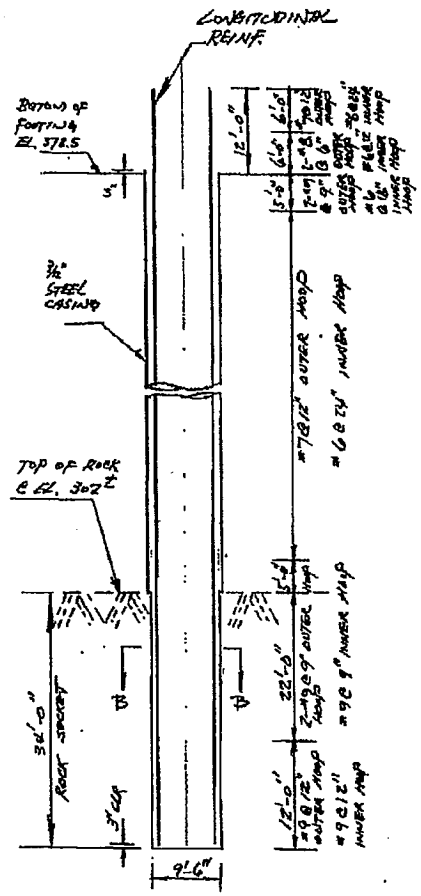

DRILLED SHAFT ELEV.
(PIER 12)

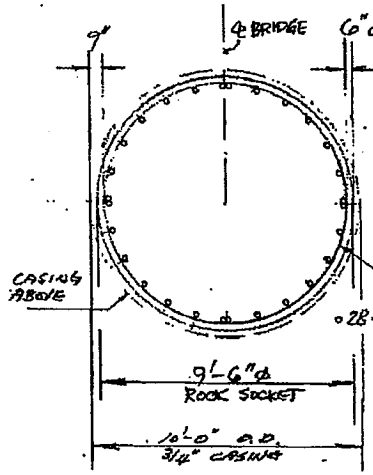

SECTION A-A
(PIER 11)

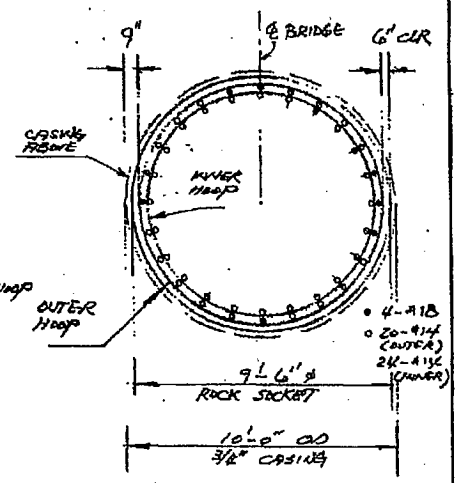

SECTION B-B
(PIER 12)

NOTES:

1. TREMIE CONCRETE $f'_c = 5000$ PSI
2. DRILLED SHAFT CASING $f_y = 50$ KSI (ASTM A572)
3. REINFORCEMENT $f_y = 60$ KSI (ASTM A706)
4. LONGITUDINAL BAR SPLICES SHALL BE MECHANICAL CONNECTION OR WELDED SPLICES.
5. PROVIDE 8 CSL TUBES AND SHALL BE EQUALLY SPACED.
6. CSL TUBES SHALL BE EXTENDED 6" ABOVE THE BOTTOM OF AS-DRILLED SHAFT.
7. FOR DRILLED SHAFT LONGITUDINAL REINF. ARRANGEMENT WITH THE FOOTING BOTTOM MAT REINF. SEE SECTION B-B ON PAGE 4.

BITTNER-SHEN Consulting Engineers, Inc. 921 SW Washington St., Suite 765 Portland, OR 97205	Job No 2009-20	Page 2 of 8
	Project I-70 BRIDGE ACROSS THE MISSISSIPPI RIVER AT ST. LOUIS	Design LS
		Date 8/17/09
	Subject PIERS 11 & 12 DRILLED SHAFTS DETAILS	Checked RBB
		Date 8/18/09

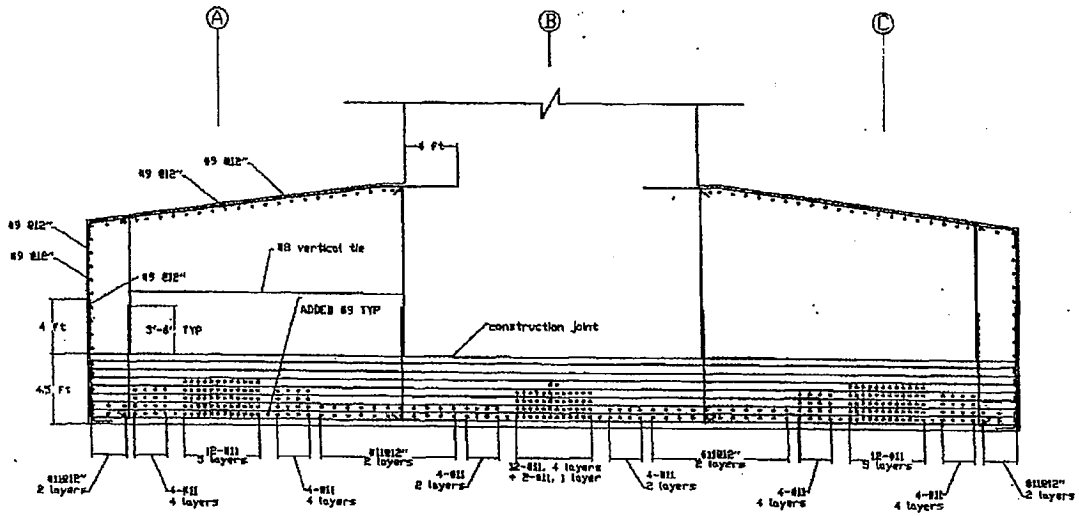

NOTE: pier reinforcement not shown

SECTION A-A

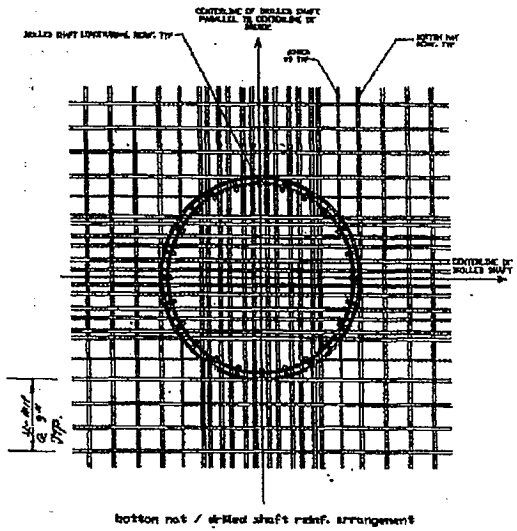

bottom mat / drilled shaft reinf. arrangement

SECTION B-B

REV. 1	8/24/09		

BITTNER-SHEN
Consulting Engineers, Inc.
921 SW Washington St., Suite 765
Portland, OR 97205

Job No 219-20	Page 4 of 8
Project I-70 BRIDGE ACROSS THE MISSISSIPPI RIVER AT ST. LOUIS	Design LS
	Date 8/24/09
Subject PIERS 11 & 12	Checked RRB
FOUNDATION FOOTING REINF. DETAILS	Date 8/24/09

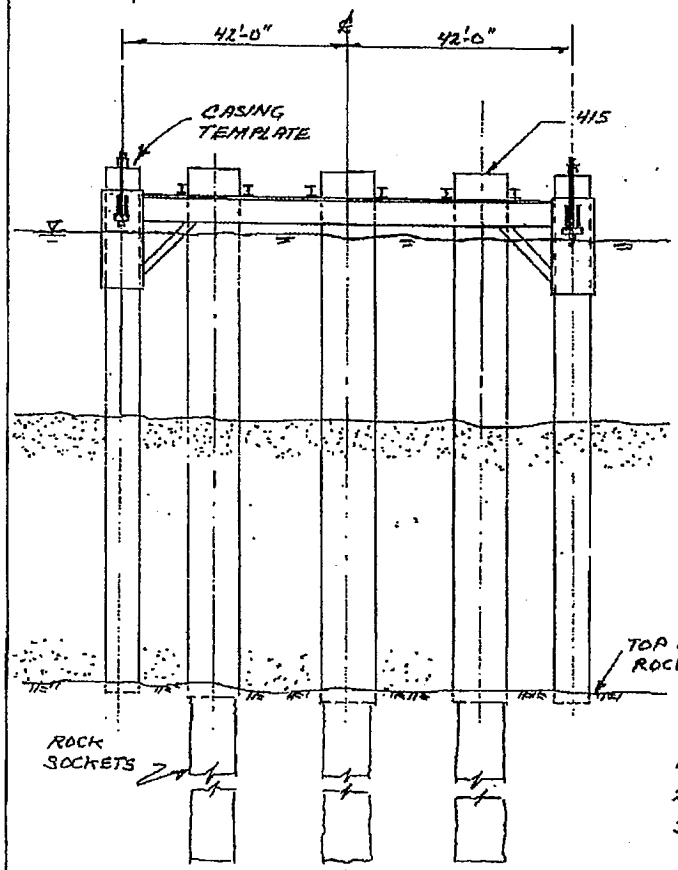

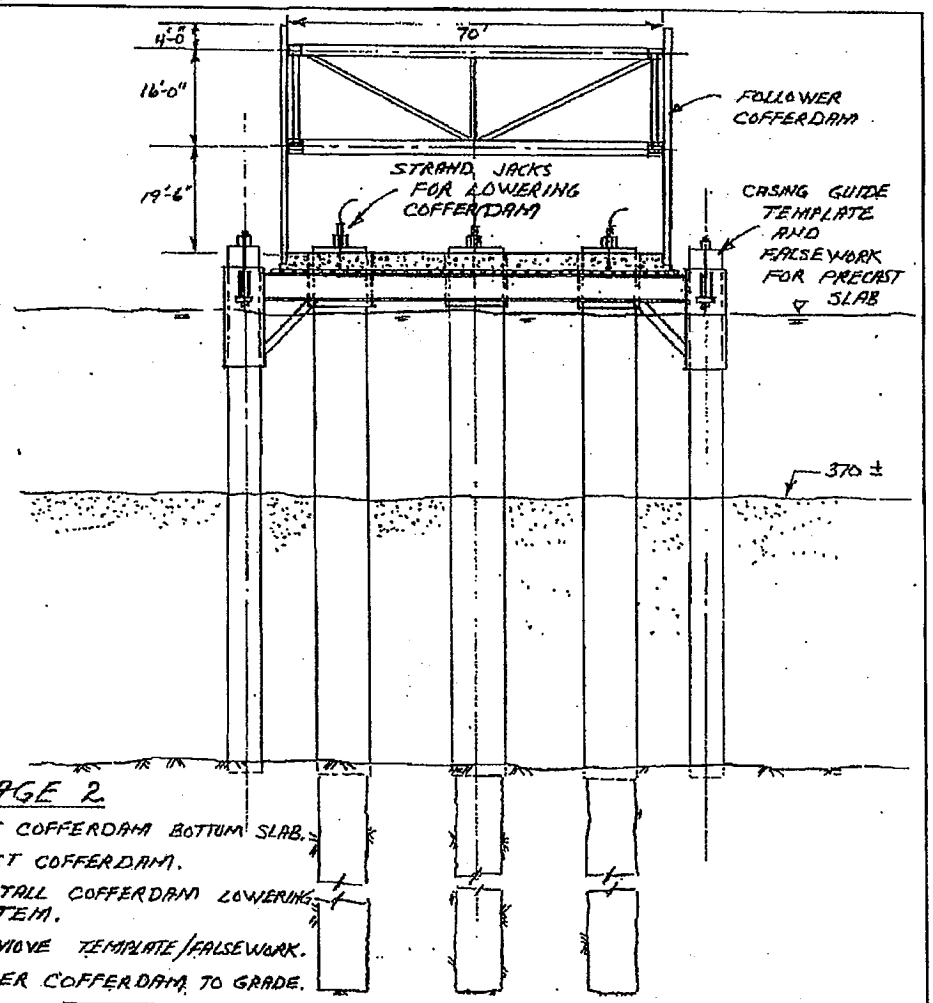

STAGE 1

1. INSTALL CASING TEMPLATE.
2. INSTALL DRILLED SHAFT CASINGS.
3. DRILL ROCK SOCKETS.
4. PLACE REINFORCING AND CONCRETE IN SHAFTS.

STAGE 2

1. CAST COFFERDAM BOTTOM SLAB.
2. ERECT COFFERDAM.
3. INSTALL COFFERDAM LOWERING SYSTEM.
4. REMOVE TEMPLATE/FALSEWORK.
5. LOWER COFFERDAM TO GRADE.

BITTNER-SHEN Consulting Engineers, Inc. 921 SW Washington St., Suite 765 Portland, OR 97205	Job No 2009-20	Page 5 of 8
	Project I-70 BRIDGE ACROSS THE MISSISSIPPI AT ST. LOUIS	Design RBB
		Date 5-06-09
	Subject CONSTRUCTION SEQUENCE FOUNDATIONS AT PIERS 11 & 12	Checked LS
		Date 5-06-09

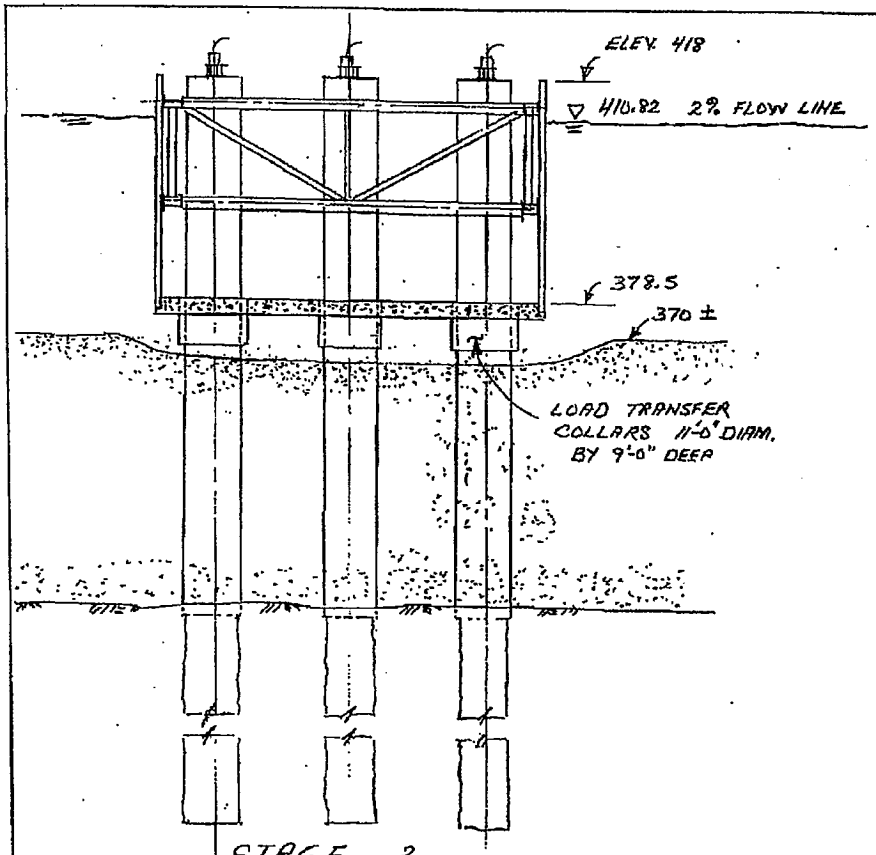

STAGE 3

1. PLACE AND CURE TREMIE GROUT IN ANNULUS BETWEEN DRILLED SHAFT CASING AND 11'-0" DIAMETER LOAD TRANSFER COLLARS.
2. DEWATER COFFERDAM.

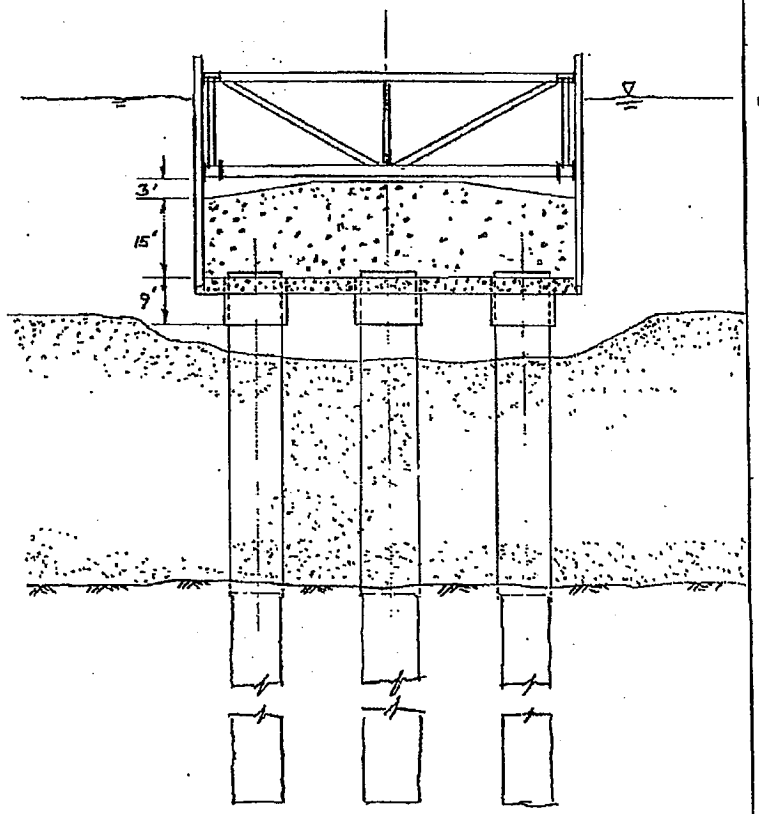

STAGE 4

1. REMOVE LOWERING SYSTEM AND CUT-OFF CASINGS.
2. SPLICE REINFORCING BARS IN DRILLED SHAFTS AND COMPLETE CONCRETE PLACEMENT IN DRILLED SHAFTS.
3. PLACE REINFORCING AND CAST PILE CAP.

BITTNER-SHEN Consulting Engineers, Inc. 921 SW Washington St, Suite 765 Portland, OR 97205	Job No 2009-20	Page 6 of 8
	Project I-70 BRIDGE ACROSS THE MISSISSIPPI AT ST LOUIS	Design RBB
		Date 5-06-09
	Subject CONSTRUCTION SEQUENCE FOUNDATIONS AT PIERS 11 & 12	Checked LS
		Date 5-06-09

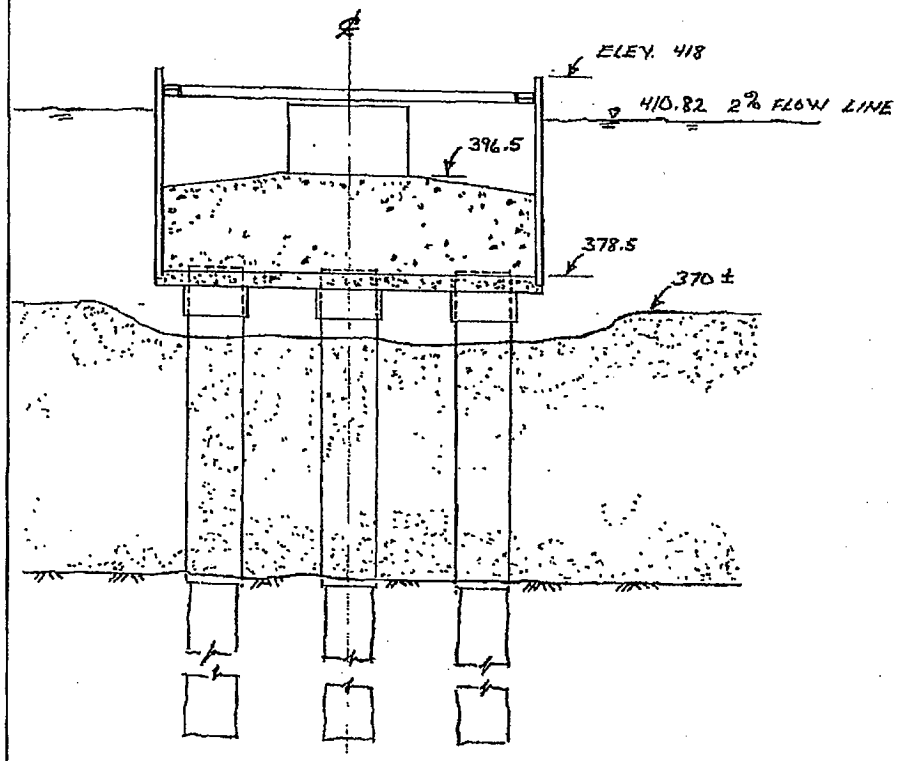

STAGE 5

1. REMOVE LOWER WALE FRAME AND DIAGONAL BRACING IN COFFERDAM.
2. FORM AND CAST LOWER 15-FT OF PIER SHAFT.

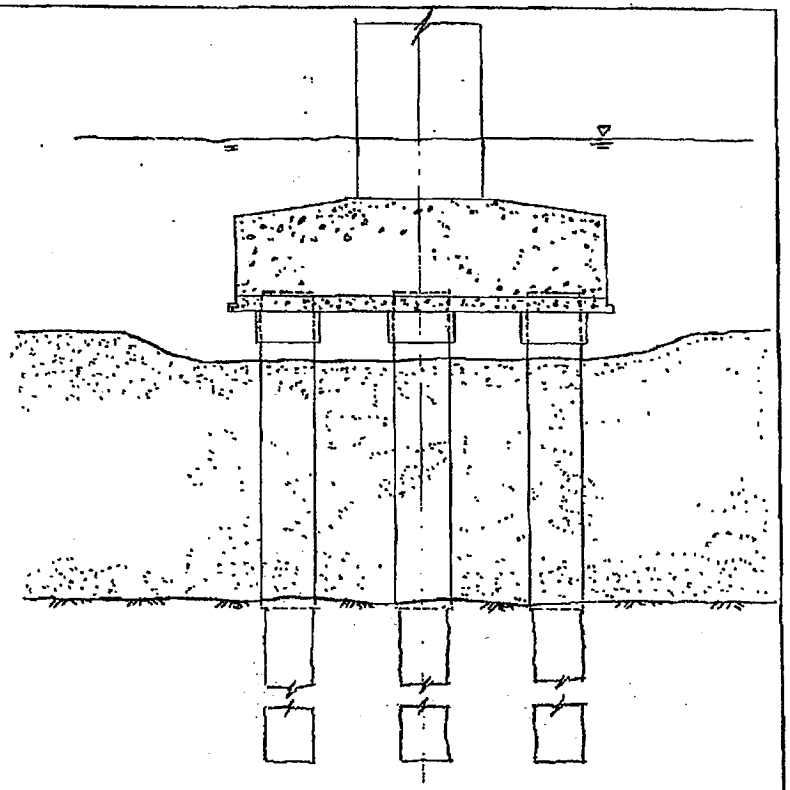

STAGE 6

1. FLOOD COFFERDAM.
2. REMOVE COFFERDAM SHEET AND BRACING FRAME.
3. COMPLETE PIER SHAFT.

BITTNER-SHEN Consulting Engineers, Inc. 921 SW Washington St., Suite 765 Portland, OR 97205	Job No 2009-20	Page 7 of 8
	Project I-70 BRIDGE ACROSS THE MISSISSIPPI AT ST. LOUIS	Design RBB
		Date 5-06-09
	Subject CONSTRUCTION SEQUENCE FOUNDATIONS AT PIERS 11 & 12	Checked LS
		Date 5-06-09

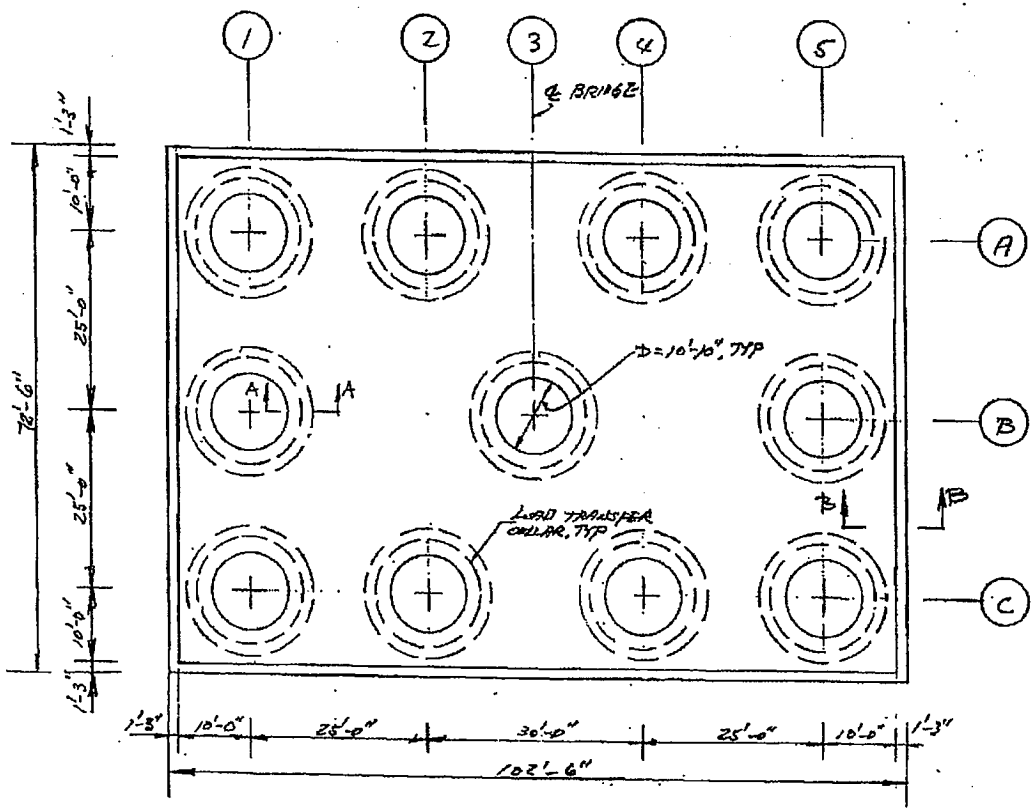

PLAN
COFFERDAM BOTTOM SLAB
1" = 15'-0"

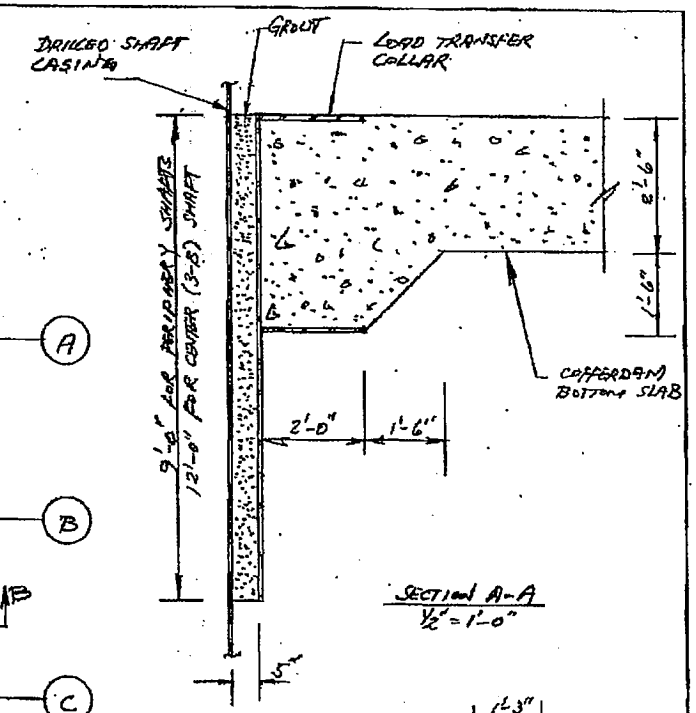

SECTION A-A
1/2" = 1'-0"

SECTION B-B
1/2" = 1'-0"

BITTNER-SHEN Consulting Engineers, Inc. 921 SW Washington St., Suite 765 Portland, OR 97205	Job No 2009-20		Page 8 of 8
	Project I-70 BRIDGE ACROSS THE MISSISSIPPI RIVER AT ST LOUIS		Design LS
			Date 8/17/09
	Subject PIERS 11 & 12 COFFERDAM BOTTOM SLAB		Checked RBB
			Date 8/18/09

VALUE ENGINEERING CHECK SHEET

TYPE OF WORK

(Check one that applies)

X Bridge/Structure/Footings
- ❑ Drainage Structures (RCP, RCB, CMP's, ect.)
- ❑ TCP/MOT
- ❑ Paving (PCCP, ect.)
- ❑ Grading/MSE Walls
- ❑ Signal/Lighting/ITS
- ❑ Misc. _____

SUMMARY OF PROPOSAL

(If needed, condense summary to a couple of lines)

_____Pier 11 & 12 Footing changes

SCANNING OF DOCUMENT

If the proposal is large, please mark or make note, which pages need to be scanned into the database. If there are special instructions, make note of them here.

_____All