Form C-104
Rev. 02/2009

VALUE ENGINEERING CHANGE PROPOSAL
MISSOURI DEPARTMENT OF TRANSPORTATION

☒ **Conceptual Proposal** ☐ **Final Proposal** **Date** 9/17/12

Contract ID 091208-601 **Job No.** J6I0984

County St. Louis **Original Bid Cost** $229,450,505.00

Contractor Massman, Traylor, Alberici, A JV **By** Thomas G. Tavernaro

Designed By BRK Electrical/PCE **Phone** (314) 881-6704

VECP# 12-62 **(to be completed by C.O.)** **VECP** ☒ **or** **PDVECP** ☐

1. **Description of existing requirements and proposed change(s). Advantages/Disadvantages**
   The existing plans indicate PVC Coated Aluminum conduit (PCA) shall be used for the electrical risers at Piers 1, 8, 22, and 23, and for the fiber optic conduit which runs from Pier 1 to Pier 8. As identified in RFI-MTA-MODOT-233, we propose to furnish fiberglass conduit in lieu of the PCA conduit. Standard wall fiberglass conduit would be used at all locations using an interference joint sealed with epoxy. The proposed conduit is less expensive than PCA conduit, and is more durable than PVC.

2. **Estimate of reduction in construction costs.** $18,230.24

3. **Prediction of any effects the proposed change(s) will have on other department costs, such as maintenance and operations.**
   The coating on the outside of this fiberglass conduit will fade over time. This does not affect the structural intergity of the conduit.

4. **Anticipated date for submittal of detailed change(s) of items required by Section 104.6 of the Specifications.**

   9/17/12
   (date)

5. **Deadline for issuing a change order to obtain maximum cost reduction, noting the effect of contract completion time or delivery schedule.**

   9/19/12 (date) — Possible schedule delay in delivery of material (effect)

6. **Dates of any previous or concurrent submission of the same proposal.**

   _____
   (date and/or dates)

Additional Comments:

**** Portion Below This Line To Be Filled Out by MoDOT ****

Comments:

This concept proposal provides for a substitution of fiberglass conduit in lieu of PVC Coated Aluminum Conduit. Based on discussions with District MoDOT Lighting, approval is recommended for this concept proposal. Cost savings are currently under review.

Digitally signed by john grana
DN: cn=john grana, c=US, o=6FMB, ou=Construction, email=john.grana@modot.mo.gov
Date: 2012.09.18 07:24:22 -05'00'

Submitted By Resident Engineer — Date

Comments:

Digitally signed by John P Donahue
DN: cn=John P Donahue, o=MoDOT, ou=3H35, email=john.donahue@modot.mo.gov, c=US
Date: 2012.09.20 08:05:26 -05'00'

Digitally signed by Randy C. Hitt
DN: cn=Randy C. Hitt, c=US, o=MoDOT, ou=6FMB, email=randy.hitt@modot.mo.gov
Date: 2012.09.24 06:53:09 -05'00'

- [x] **Approval Recommended**
- [ ] **Rejection Recommended**

District Engineer — Date

Comments:

Digitally signed by Pete
DN: cn=Pete, c=US, o=MO Division, ou=FHWA, email=peter.clogston@dot.gov
Date: 2012.09.20 08:55:05 -05'00'

- [x] **Approval Recommended**
- [ ] **Rejection Recommended**

Federal Highway Administration — Date
Required for FHWA Full Oversight Projects

Comments:

Digitally signed by John P Donahue
DN: cn=John P Donahue, o=MoDOT, ou=3H35, email=john.donahue@modot.mo.gov, c=US
Date: 2012.09.24 06:53:50 -05'00'

- [x] **Approval**
- [ ] **Rejection**

State Construction and Materials Engineer — Date

Distribution: **Resident Engineer, Project Manager, District Construction & Materials Engineer, State Construction & Materials Engineer, FHWA Value Engineering Administrator – MoDOT, P. O. Box 270, Jefferson City, MO 65102**

Straight Section

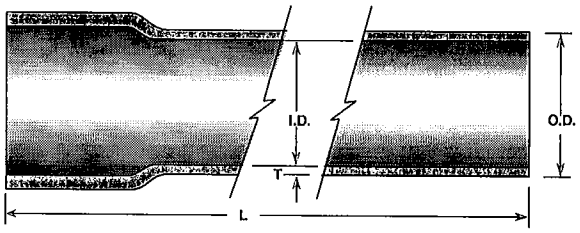

Straight Socket Joint (IPS)

Type SW (Standard Wall) Inches (Metric)															
Nominal Size		Item No Belowground	Item No Aboveground	UL/CSA Listed	Outside Diameter Average		Outside Diameter Tolerance		Min. Inside Diameter		Nominal Wall Thickness* (T)		Length (L)		Weight lbs/ft	kg/m
¾	(19)	07A-SW-10S-S	07C-SW-10S-S	Yes	1.050	(27)	+0.028 -0.018	(0.7) (0.4)	0.910	(23)	.070	(2)	9.5 ft	(2.9m)	.17	(0.25)
1	(25)	10A-SW-10S-S	10C-SW-10S-S	Yes	1.315	(33)	+0.028 -0.018	(0.7) (0.4)	1.175	(30)	.070	(2)	9.5 ft	(2.9m)	.19	(0.28)
1¼	(32)	12A-SW-20-S	12C-SW-20-S	Yes	1.660	(42)	+0.028 -0.018	(0.7) (0.4)	1.520	(39)	.070	(2)	20 ft	(6.1m)	.23	(0.34)
1½	(38)	15A-SW-20-S	15C-SW-20-S	Yes	1.900	(48)	+0.028 -0.018	(0.7) (0.4)	1.760	(45)	.070	(2)	20 ft	(6.1m)	.33	(0.49)

Iron Pipe Size (IPS)

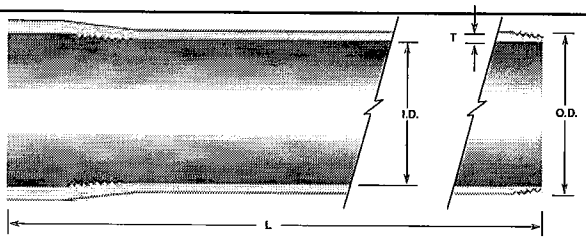

Interference Joint (IPS)

Type SW (Standard Wall) Inches (Metric)															
Nominal Size		Item No Belowground	Item No Aboveground	UL/CSA Listed	Outside Diameter Average		Outside Diameter Tolerance		Min. Inside Diameter		Nominal Wall Thickness* (T)		Length (L)**		Weight lbs/ft	kg/m
2	(51)	20A-SW-20-I	20C-SW-20-I	Yes	2.375	(60)	+0.028 -0.018	(0.7) (0.4)	2.235	(57)	.070	(2)	20 ft	(6.1m)	.38	(0.57)
2½	(64)	25A-SW-20-I	25C-SW-20-I	Yes	2.875	(73)	+0.028 -0.018	(0.7) (0.4)	2.740	(69)	.070	(2)	20 ft	(6.1m)	.46	(0.68)
3	(76)	30A-SW-20-I	30C-SW-20-I	Yes	3.500	(89)	+0.028 -0.018	(0.7) (0.4)	3.360	(85)	.070	(2)	20 ft	(6.1m)	.60	(0.89)
4	(102)	40A-SW-20-I	40C-SW-20-I	Yes	4.460	(113)	+0.028 -0.018	(0.7) (0.4)	4.320	(110)	.070	(2)	20 ft	(6.1m)	.72	(1.07)
5	(127)	50A-SW-20-I	50C-SW-20-I	--	5.520	(140)	+0.028 -0.018	(0.7) (0.4)	5.380	(137)	.070	(2)	20 ft	(6.1m)	.90	(1.34)
6	(152)	60A-SW-20-I	60C-SW-20-I	--	6.575	(167)	+0.028 -0.018	(0.7) (0.4)	6.435	(163)	.070	(2)	20 ft	(6.1m)	1.00	(1.49)
8	(203)	80A-SW-20-I	80C-SW-20-I	--	8.592	(218)	+0.028 -0.018	(0.7) (0.4)	8.400	(213)	.096	(2)	20 ft	(6.1m)	2.02	(3.01)
Type MW (Medium Wall) Inches (Metric)															
5	(127)	50A-MW-20-I	50C-MW-20-I	Yes	5.572	(142)	+0.034 -0.028	(0.9) (0.7)	5.380	(137)	.096	(2)	20 ft	(6.1m)	1.20	(1.79)
6	(152)	60A-MW-20-I	60C-MW-20-I	Yes	6.627	(168)	+0.034 -0.028	(0.9) (0.7)	6.435	(163)	.096	(2)	20 ft	(6.1m)	1.42	(2.11)
8	(203)	80A-MW-20-I	80C-MW-20-I	--	8.620	(219)	+0.034 -0.028	(0.9) (0.7)	8.400	(213)	.110	(3)	20 ft	(6.1m)	2.14	(3.20)
Type HW (Heavy Wall) Inches (Metric)															
4	(102)	40A-HW-20-I	40C-HW-20-I	Yes	4.512	(115)	+0.028 -0.022	(0.7) (0.6)	4.320	(110)	.096	(2)	20 ft	(6.1m)	0.97	(1.44)
5	(127)	50A-HW-20-I	50C-HW-20-I	Yes	5.600	(142)	+0.034 -0.028	(0.9) (0.7)	5.380	(137)	.110	(3)	20 ft	(6.1m)	1.32	(1.96)
6	(152)	60A-HW-20-I	60C-HW-20-I	Yes	6.655	(169)	+0.034 -0.028	(0.9) (0.7)	6.435	(163)	.110	(3)	20 ft	(6.1m)	1.63	(2.43)
8	(203)	80A-HW-20-I	80C-HW-20-I	--	8.650	(220)	+0.034 -0.028	(0.9) (0.7)	8.400	(213)	.125	(3)	20 ft	(6.1m)	2.43	(3.62)

** Actual wall thickness is that required to meet the performance requirements for specifications. Other wall thicknesses are available by special request.*

*** When ordering 10 ft **(3.05m)** lengths, half of the order will be supplied with interference joint and half with straight socket joint.*

CHAMPION MIX®

(Epoxy Adhesive)

The CHAMPION MIX system is a two part adhesive, epoxy resin system, designed to permanently bond fittings and joints of fiberglass reinforced epoxy pipe. It is also designed for use with pultruded polyester and vinylester components. Each cartridge system contains resin, hardener, and one plastic static mixer. An adhesive gun is required for applying the adhesive (ordered separately).

Under normal conditions, it takes approximately 1 hour for the adhesive to harden at its rated temperature. Therefore, additional mixer tips (see below) might be required for an installation.

The CHAMPION MIX system consists of the following components:

- Adhesive gun, Item #CM-AG
- Epoxy cartridge, 20 fl. oz., available for two different ambient curing temperatures
  CM-2070 for 70°F ***(21°C)*** ambient temperature (which is the standard grade)
  CM-2040 for 40°F ***(4°C)*** ambient temperature
- Mixer tip, 9" long, Item #CM-MT (one tip is included with each cartridge ordered).

Note: Proper mixing can be visually ascertained when the epoxy mixture is evenly grey.

Estimated Number of Joints Per Cartridge
(estimated only, as it varies depending on the amount of adhesive applied per application)

¾"	100 Joints	1½"	60 Joints	3"	35 Joints	5"	20 Joints
1"	85 Joints	2"	50 Joints	3½"	30 Joints	6"	15 Joints
1¼"	75 Joints	2½"	40 Joints	4"	25 Joints		

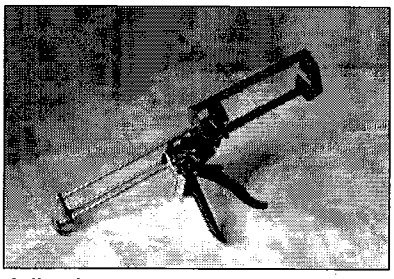
Adhesive gun

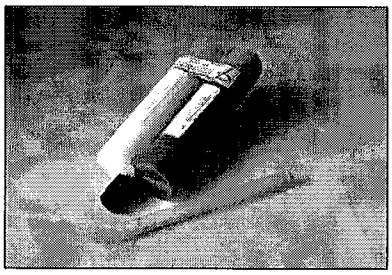
Epoxy Cartridge & Mixer Tip

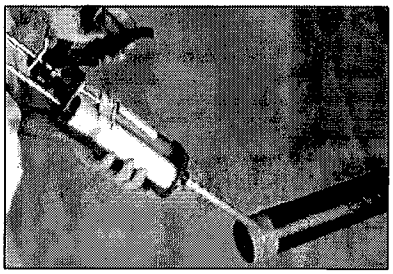
Assembled Unit

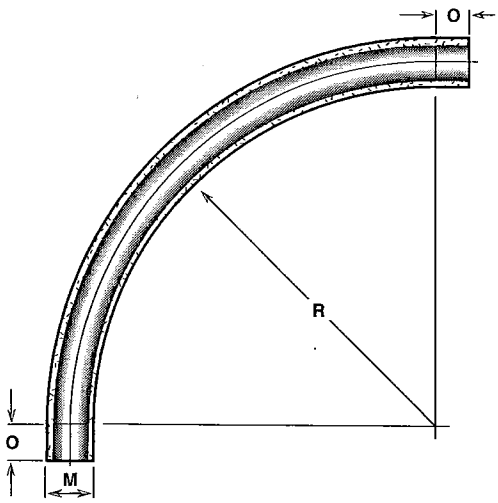

90° x 24"

Nominal Size	Type	IPS Item No. Belowground	IPS Item No. Aboveground	M	O-Tangent (min.)	R-Radius (min.)	Weight lbs	Weight kg
¾	SW	07A-SW-91-P	07C-SW-91-P	1.05 (27)	6 (152)	24 (610)	0.71	(0.32)
1	SW	10A-SW-91-P	10C-SW-91-P	1.32 (33)	6 (152)	24 (610)	0.79	(0.36)
1¼	SW	12A-SW-91-P	12C-SW-91-P	1.66 (42)	6 (152)	24 (610)	0.96	(0.44)
1½	SW	15A-SW-91-P	15C-SW-91-P	1.90 (48)	6 (152)	24 (610)	1.38	(0.63)
2	SW	20A-SW-91-P	20C-SW-91-P	2.37 (60)	6 (152)	24 (610)	1.58	(0.72)
2½	SW	25A-SW-91-P	25C-SW-91-P	2.88 (73)	6 (152)	24 (610)	1.92	(0.87)
3	SW	30A-SW-91-P	30C-SW-91-P	3.50 (89)	6 (152)	24 (610)	2.50	(1.14)
4	SW	40A-SW-91-P	40C-SW-91-P	4.46 (113)	6 (152)	24 (610)	3.00	(1.36)
4	HW	40A-HW-91-P	40C-HW-91-P	4.51 (115)	6 (152)	24 (610)	4.04	(1.83)

Nominal Size	Type	ID Item No. Belowground	ID Item No. Aboveground	M	O-Tangent (min)	R-Radius (min)	Weight lbs	Weight kg
2	SW	20B-SW-91-P	20D-SW-91-P	2.14 (54)	6 (152)	24 (610)	1.42	(0.65)
2½	SW	25B-SW-91-P	25D-SW-91-P	2.64 (67)	6 (152)	24 (610)	1.75	(0.80)
3	SW	30B-SW-91-P	30D-SW-91-P	3.14 (80)	6 (152)	24 (610)	2.00	(0.91)
4	SW	40B-SW-91-P	40D-SW-91-P	4.14 (105)	6 (152)	24 (610)	2.88	(1.30)
4	HW	40A-HW-91-P	40C-HW-91-P	4.19 (106)	6 (152)	24 (610)	3.84	(1.74)

Nominal Size	Type	Item No. Belowground	Item No. Aboveground	M	O-Tangent (min)	R-Radius (min)	Weight lbs	Weight kg
2	XW	20B-XW-91	20D-XW-91-P	2.50 (65)	6 (152)	24 (610)	5.25	(2.38)
2½	XW	25B-XW-91	25D-XW-91-P	3.00 (76)	6 (152)	24 (610)	6.42	(2.92)
3	XW	30B-XW-91	30D-XW-91-P	3.50 (89)	6 (152)	24 (610)	7.58	(3.44)
3½	XW	35B-XW-91	35D-XW-91-P	4.00 (102)	6 (152)	24 (610)	8.76	(3.98)
4	XW	40B-XW-91	40D-XW-91-P	4.50 (114)	6 (152)	24 (610)	9.92	(4.50)

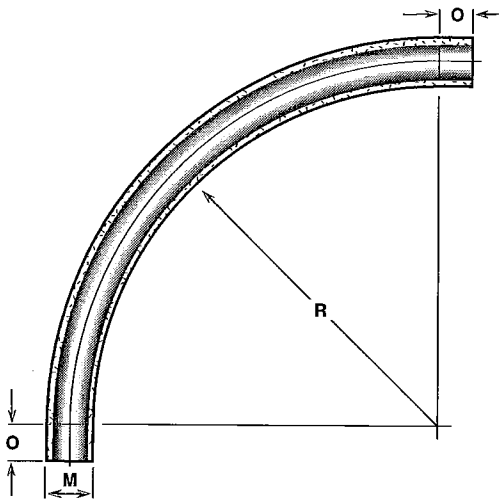

90° x 36"

Nominal Size	Type	IPS Item No. Belowground	IPS Item No. Aboveground	M	O-Tangent (min)	R-Radius (min)	Weight lbs	Weight kg
¾	SW	07A-SW-92-P	07C-SW-92-P	1.05 (27)	6 (152)	36 (914)	0.96	(0.44)
1	SW	10A-SW-92-P	10C-SW-92-P	1.32 (33)	6 (152)	36 (914)	1.08	(0.49)
1¼	SW	12A-SW-92-P	12C-SW-92-P	1.66 (42)	6 (152)	36 (914)	1.30	(0.59)
1½	SW	15A-SW-92-P	15C-SW-92-P	1.90 (48)	6 (152)	36 (914)	1.87	(0.85)
2	SW	20A-SW-92-P	20C-SW-92-P	2.37 (60)	6 (152)	36 (914)	2.15	(0.98)
2½	SW	25A-SW-92-P	25C-SW-92-P	2.88 (73)	6 (152)	36 (914)	2.61	(1.19)
3	SW	30A-SW-92-P	30C-SW-92-P	3.50 (89)	6 (152)	36 (914)	3.40	(1.54)
4	SW	40A-SW-92-P	40C-SW-92-P	4.46 (113)	6 (152)	36 (914)	4.08	(1.85)
4	HW	40A-HW-92-P	40C-HW-92-P	4.51 (115)	6 (152)	36 (914)	5.50	(2.50)
5	SW	50A-SW-92-P	50C-SW-92-P	5.52 (140)	6 (152)	36 (914)	5.14	(2.34)
5	MW	50A-MW-92-P	50C-MW-92-P	5.57 (141)	6 (152)	36 (914)	6.85	(3.08)
5	HW	50A-HW-92-P	50C-HW-92-P	5.60 (142)	6 (152)	36 (914)	7.54	(3.42)
6	SW	60A-SW-92-P	60C-SW-92-P	6.58 (167)	6 (152)	36 (914)	5.71	(2.57)
6	MW	60A-MW-92-P	60C-MW-92-P	6.63 (168)	6 (152)	36 (914)	8.11	(3.65)
6	HW	60A-HW-92-P	60C-HW-92-P	6.66 (169)	6 (152)	36 (914)	9.31	(4.19)

Nominal Size	Type	ID Item No. Belowground	ID Item No. Aboveground	M	O-Tangent (min)	R-Radius (min)	Weight lbs	Weight kg
2	SW	20B-SW-92-P	20D-SW-92-P	2.14 (54)	6 (152)	36 (914)	1.93	(1.14)
2½	SW	25B-SW-92-P	25D-SW-92-P	2.64 (67)	6 (152)	36 (914)	2.38	(1.36)
3	SW	30B-SW-92-P	30D-SW-92-P	3.14 (80)	6 (152)	36 (914)	2.72	(1.59)
3½	SW	35B-SW-92-P	35D-SW-92-P	3.64 (92)	6 (152)	36 (914)	3.40	(1.63)
4	SW	40B-SW-92-P	40D-SW-92-P	4.14 (105)	6 (152)	36 (914)	3.91	(1.68)
4	HW	40B-HW-92-P	40D-HW-92-P	4.19 (106)	6 (152)	36 (914)	5.21	(2.09)
4½	SW	45B-SW-92-P	45D-SW-92-P	4.64 (117)	6 (152)	36 (914)	4.25	(1.86)
4½	HW	45B-HW-92-P	45D-HW-92-P	4.69 (118)	6 (152)	36 (914)	5.89	(2.27)
5	SW	50B-SW-92-P	50D-SW-92-P	5.14 (131)	6 (152)	36 (914)	4.86	(2.18)
5	MW	50B-MW-92-P	50D-MW-92-P	5.19 (132)	6 (152)	36 (914)	6.45	(2.90)
5	HW	50B-HW-92-P	50D-HW-92-P	5.22 (132)	6 (152)	36 (914)	7.42	(3.34)
6	SW	60B-SW-92-P	60D-SW-92-P	6.14 (156)	6 (152)	36 (914)	5.83	(2.62)
6	MW	60BMW-92-P	60D-MW-92-P	6.19 (157)	6 (152)	36 (914)	7.71	(3.47)
6	HW	60B-HW-92-P	60D-HW-92-P	6.22 (158)	6 (152)	36 (914)	9.02	(4.06)

Nominal Size	Type	Item No. Belowground	Item No. Aboveground	M	O-Tangent (min)	R-Radius (min)	Weight lbs	Weight kg
2	XW	20B-XW-92	20D-XW-92-P	2.50 (65)	6 (152)	36 (914)	7.14	(3.24)
2½	XW	25B-XW-92	25D-XW-92-P	3.00 (76)	6 (152)	24 (610)	8.73	(3.96)
3	XW	30B-XW-92	30D-XW-92-P	3.50 (89)	6 (152)	36 (914)	10.31	(4.68)
3½	XW	35B-XW-92	35D-XW-92-P	4.00 (102)	6 (152)	24 (610)	11.90	(5.40)
4	XW	40B-XW-92	40D-XW-92-P	4.50 (114)	6 (152)	36 (914)	13.49	(6.12)
5	XW	50B-XW-92	50D-XW-92-P	5.50 (140)	6 (152)	36 (914)	16.79	(7.56)
6	XW	60B-XW-92	60D-XW-92-P	6.50 (165)	6 (152)	36 (914)	19.99	(9.00)

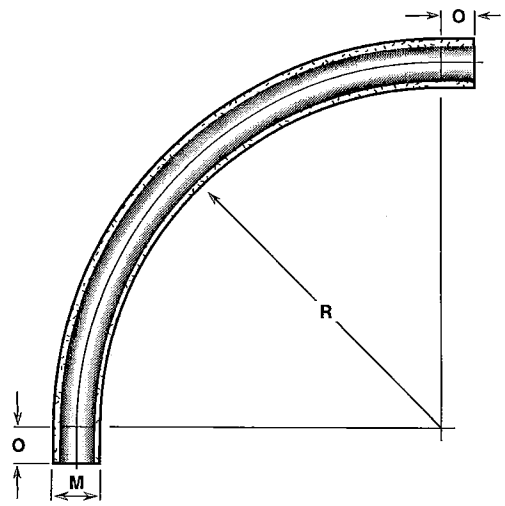

90° x 48"

Nominal Size	Type	IPS Item No. Belowground	IPS Item No. Aboveground	M	O-Tangent (min)	R-Radius (min)	Weight lbs	Weight kg
¾	SW	07A-SW-93-P	07C-SW-93-P	1.05 (27)	6 (152)	48 (1,219)	1.36	(0.62)
1	SW	10A-SW-93-P	10C-SW-93-P	1.32 (33)	6 (152)	48 (1,219)	1.52	(0.69)
1¼	SW	12A-SW-93-P	12C-SW-93-P	1.66 (42)	6 (152)	48 (1,219)	1.84	(0.84)
1½	SW	15A-SW-93-P	15C-SW-93-P	1.90 (48)	6 (152)	48 (1,219)	2.64	(1.20)
2	SW	20A-SW-93-P	20C-SW-93-P	2.37 (60)	6 (152)	48 (1,219)	3.04	(1.38)
2½	SW	25A-SW-93-P	25C-SW-93-P	2.88 (73)	6 (152)	48 (1,219)	3.68	(1.67)
3	SW	30A-SW-93-P	30C-SW-93-P	3.50 (89)	6 (152)	48 (1,219)	4.80	(2.18)
4	SW	40A-SW-93-P	40C-SW-93-P	4.46 (113)	6 (152)	48 (1,219)	5.76	(2.62)
4	HW	40A-HW-93-P	40C-HW-93-P	4.51 (114)	6 (152)	48 (1,219)	7.76	(3.52)
5	SW	50A-SW-93-P	50C-SW-93-P	5.52 (140)	6 (152)	48 (1,219)	7.20	(3.27)
5	MW	50A-MW-93-P	50C-MW-93-P	5.57 (141)	6 (152)	48 (1,219)	9.60	(4.36)
5	HW	50A-HW-93-P	50C-HW-93-P	5.60 (142)	6 (152)	48 (1,219)	10.40	(4.72)
6	SW	60A-SW-93-P	60C-SW-93-P	6.58 (167)	6 (152)	48 (1,219)	8.64	(3.92)
6	MW	60A-MW-93-P	60C-MW-93-P	6.63 (168)	6 (152)	48 (1,219)	11.52	(5.23)
6	HW	60A-HW-93-P	60C-HW-93-P	6.66 (169)	6 (152)	48 (1,219)	12.67	(5.75)

Nominal Size	Type	ID Item No. Belowground	ID Item No. Aboveground	M	O-Tangent (min)	R-Radius (min)	Weight lbs	Weight kg
2	SW	20B-SW-93-P	20D-SW-93-P	2.14 (54)	6 (152)	48 (1,219)	2.72	(1.24)
2½	SW	25B-SW-93-P	25D-SW-93-P	2.64 (67)	6 (152)	48 (1,219)	3.36	(1.53)
3	SW	30B-SW-93-P	30D-SW-93-P	3.14 (80)	6 (152)	48 (1,219)	3.84	(1.74)
3½	SW	35B-SW-93-P	35D-SW-93-P	3.64 (92)	6 (152)	48 (1,219)	4.80	(2.18)
4	SW	40B-SW-93-P	40D-SW-93-P	4.14 (105)	6 (152)	48 (1,219)	5.52	(2.51)
4	HW	40B-HW-93-P	40D-HW-93-P	4.19 (106)	6 (152)	48 (1,219)	7.36	(3.34)
4½	SW	45B-SW-93-P	45D-SW-93-P	4.64 (117)	6 (152)	48 (1,219)	6.00	(2.72)
4½	HW	45B-HW-93-P	45D-HW-93-P	4.69 (118)	6 (152)	48 (1,219)	8.32	(3.78)
5	SW	50B-SW-93-P	50D-SW-93-P	5.14 (131)	6 (152)	48 (1,219)	6.80	(3.09)
5	MW	50B-MW-93-P	50D-MW-93-P	5.19 (132)	6 (152)	48 (1,219)	9.04	(4.10)
5	HW	50B-HW-93-P	50D-HW-93-P	5.22 (133)	6 (152)	48 (1,219)	10.56	(4.79)
6	SW	60B-SW-93-P	60D-SW-93-P	6.14 (156)	6 (152)	48 (1,219)	8.16	(3.70)
6	MW	60B-MW-93-P	60D-MW-93-P	6.19 (157)	6 (152)	48 (1,219)	10.85	(4.92)
6	HW	60B-HW-93-P	60D-HW-93-P	6.22 (158)	6 (152)	48 (1,219)	12.48	(5.66)

Nominal Size	Type	Item No. Belowground	Item No. Aboveground	M	O-Tangent (min)	R-Radius (min)	Weight lbs	Weight kg
2	XW	20B-XW-93-P	20D-XW-93-P	2.50 (65)	6 (152)	48 (1,219)	10.08	(4.58)
2½	XW	25B-XW-93-P	25D-XW-93-P	3.00 (76)	6 (152)	48 (1,219)	12.32	(5.59)
3	XW	30B-XW-93-P	30D-XW-93-P	3.50 (89)	6 (152)	48 (1,219)	14.56	(6.61)
3½	XW	35B-XW-93-P	35D-XW-93-P	4.00 (102)	6 (152)	48 (1,219)	16.80	(7.63)
4	XW	40B-XW-93-P	40D-XW-93-P	4.50 (114)	6 (152)	48 (1,219)	19.04	(8.64)
5	XW	50B-XW-93-P	50D-XW-93-P	5.50 (140)	6 (152)	48 (1,219)	23.52	(10.68)
6	XW	60B-XW-93-P	60D-XW-93-P	6.50 (165)	6 (152)	48 (1,219)	28.00	(12.71)

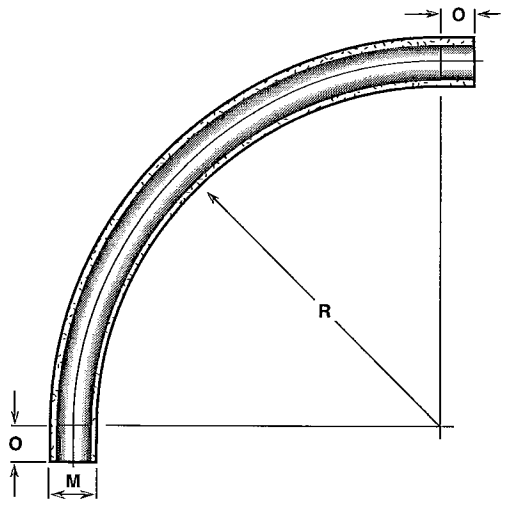

90° x 60"

Nominal Size	Type	IPS Item No. Belowground	IPS Item No. Aboveground	M	O-Tangent (min)	R-Radius (min)	Weight lbs	Weight kg
¾	SW	07A-SW-94-P	07C-SW-94-P	1.05 (27)	6 (152)	60 (1,524)	1.50	(0.68)
1	SW	10A-SW-94-P	10C-SW-94-P	1.32 (33)	6 (152)	60 (1,524)	1.68	(0.76)
1¼	SW	12A-SW-94-P	12C-SW-94-P	1.66 (42)	6 (152)	60 (1,524)	2.03	(0.92)
1½	SW	15A-SW-94-P	15C-SW-94-P	1.90 (48)	6 (152)	60 (1,524)	2.92	(1.33)
2	SW	20A-SW-94-P	20C-SW-94-P	2.37 (60)	6 (152)	60 (1,524)	3.36	(1.53)
2½	SW	25A-SW-94-P	25C-SW-94-P	2.88 (73)	6 (152)	60 (1,524)	4.06	(1.84)
3	SW	30A-SW-94-P	30C-SW-94-P	3.50 (89)	6 (152)	60 (1,524)	5.30	(2.41)
4	SW	40A-SW-94-P	40C-SW-94-P	4.46 (113)	6 (152)	60 (1,524)	6.36	(2.89)
4	HW	40A-HW-94-P	40C-HW-94-P	4.51 (115)	6 (152)	60 (1,524)	8.57	(3.89)
5	SW	50A-SW-94-P	50C-SW-94-P	5.52 (140)	6 (152)	60 (1,524)	7.95	(3.61)
5	MW	50A-MW-94-P	50C-MW-94-P	5.57 (141)	6 (152)	60 (1,524)	10.60	(4.81)
5	HW	50A-HW-94-P	50C-HW-94-P	5.60 (142)	6 (152)	60 (1,524)	11.48	(5.21)
6	SW	60A-SW-94-P	60C-SW-94-P	6.58 (167)	6 (152)	60 (1,524)	8.83	(4.01)
6	MW	60A-MW-94-P	60C-MW-94-P	6.63 (168)	6 (152)	60 (1,524)	12.54	(5.69)
6	HW	60A-HW-94-P	60C-HW-94-P	6.66 (169)	6 (152)	60 (1,524)	14.40	(6.54)

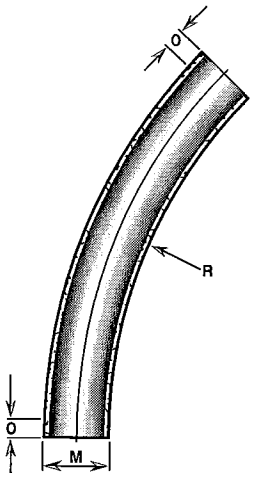

45° x 36"

Nominal Size	Type	IPS Item No. Belowground	IPS Item No. Aboveground	M	O-Tangent (min)	R - Radius (min)	Weight lbs	Weight kg
¾	SW	07A-SW-82-P	07C-SW-82-P	1.05 (27)	6 (152)	36 (914)	0.57	(0.26)
1	SW	10A-SW-82-P	10C-SW-82-P	1.32 (33)	6 (152)	36 (914)	0.63	(0.29)
1¼	SW	12A-SW-82-P	12C-SW-82-P	1.66 (42)	6 (152)	36 (914)	0.77	(0.35)
1½	SW	15A-SW-82-P	15C-SW-82-P	1.90 (48)	6 (152)	36 (914)	1.10	(0.50)
2	SW	20A-SW-82-P	20C-SW-82-P	2.37 (60)	6 (152)	36 (914)	1.27	(0.58)
2½	SW	25A-SW-82-P	25C-SW-82-P	2.88 (73)	6 (152)	36 (914)	1.53	(0.70)
3	SW	30A-SW-82-P	30C-SW-82-P	3.50 (89)	6 (152)	36 (914)	2.00	(0.91)
4	SW	40A-SW-82-P	40C-SW-82-P	4.46 (113)	6 (152)	36 (914)	2.40	(1.09)
4	HW	40A-HW-82-P	40C-HW-82-P	4.50 (114)	6 (152)	36 (914)	3.23	(1.47)
5	SW	50A-SW-82-P	50C-SW-82-P	5.52 (140)	6 (152)	36 (914)	3.00	(1.36)
5	MW	50A-MW-82-P	50C-MW-82-P	5.57 (141)	6 (152)	36 (914)	4.00	(1.81)
5	HW	50A-HW-82-P	50C-HW-82-P	5.60 (152)	6 (152)	36 (914)	4.39	(2.00)
6	SW	60A-SW-82-P	60C-SW-82-P	6.58 (167)	6 (152)	36 (914)	3.33	(1.51)
6	MW	60A-MW-82-P	60C-MW-82-P	6.63 (168)	6 (152)	36 (914)	4.73	(2.15)
6	HW	60A-HW-82-P	60C-HW-82-P	6.66 (169)	6 (152)	36 (914)	5.43	(2.46)

Nominal Size	Type	ID Item No. Belowground	ID Item No. Aboveground	M	O-Tangent (min)	R - Radius (min)	Weight lbs	Weight kg
2	SW	20B-SW-82-P	20D-SW-82-P	2.14 (54)	6 (152)	36 (914)	1.13	(0.51)
2½	SW	25B-SW-82-P	25D-SW-82-P	2.64 (67)	6 (152)	36 (914)	1.40	(0.64)
3	SW	30B-SW-82-P	30D-SW-82-P	3.14 (80)	6 (152)	36 (914)	1.60	(0.73)
3½	SW	35B-SW-82-P	35D-SW-82-P	3.64 (92)	6 (152)	36 (914)	2.00	(0.91)
4	SW	40B-SW-82-P	40D-SW-82-P	4.14 (105)	6 (152)	36 (914)	2.30	(1.04)
4	HW	40B-HW-82-P	40D-HW-82-P	4.19 (106)	6 (152)	36 (914)	3.07	(1.39)
4½	SW	45B-SW-82-P	45D-SW-82-P	4.64 (117)	6 (152)	36 (914)	3.65	(1.66)
4½	HW	45B-HW-82-P	45D-HW-82-P	4.69 (118)	6 (152)	36 (914)	4.00	(1.82)
5	SW	50B-SW-82-P	50D-SW-82-P	5.14 (131)	6 (152)	36 (914)	2.83	(1.28)
5	MW	50B-MW-82-P	50D-MW-82-P	5.19 (132)	6 (152)	36 (914)	3.76	(1.71)
5	HW	50B-HW-82-P	50D-HW-82-P	5.22 (132)	6 (152)	36 (914)	4.33	(1.96)
6	SW	60B-SW-82-P	60D-SW-82-P	6.14 (156)	6 (152)	36 (914)	3.40	(1.54)
6	MW	60B-MW-82-P	60D-MW-82-P	6.19 (157)	6 (152)	36 (914)	4.50	(2.04)
6	HW	60B-HW-82-P	60D-HW-82-P	6.22 (158)	6 (152)	36 (914)	5.26	(2.39)

Nominal Size	Type	Item No. Belowground	Item No. Aboveground	M	O-Tangent (min)	R - Radius (min)	Weight lbs	Weight kg
2	XW	20B-XW-82	20D-XW-82-P	2.50 (65)	6 (152)	36 (914)	4.20	(1.91)
2½	XW	25B-XW-82	25D-XW-82-P	3.00 (76)	6 (152)	24 (610)	5.13	(2.33)
3	XW	30B-XW-82	30D-XW-82-P	3.50 (89)	6 (152)	24 (610)	6.07	(2.76)
3½	XW	35B-XW-82	35D-XW-82-P	4.00 (102)	6 (152)	24 (610)	6.99	(3.18)
4	XW	40B-XW-82	40D-XW-82-P	4.59 (114)	6 (152)	36 (914)	7.93	(3.60)
5	XW	50B-XW-82	50D-XW-82-P	5.50 (140)	6 (152)	36 (914)	9.79	(4.44)
6	XW	60B-XW-82	60D-XW-82-P	6.50 (165)	6 (152)	36 (914)	11.65	(5.29)

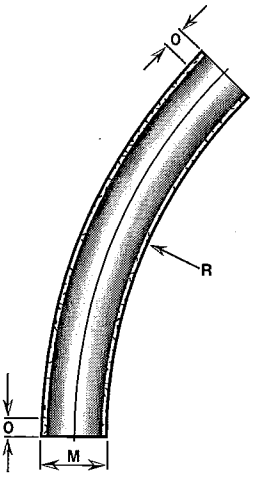

45° x 48"

Nominal Size	Type	IPS Item No. Belowground	IPS Item No. Aboveground	M	O-Tangent (min)	R - Radius (min)	Weight lbs	Weight kg
¾	SW	07A-SW-83-P	07C-SW-83-P	1.05 (27)	6 (152)	48 (1,219)	0.69	(0.31)
1	SW	10A-SW-83-P	10C-SW-83-P	1.32 (33)	6 (152)	48 (1,219)	0.78	(0.35)
1¼	SW	12A-SW-83-P	12C-SW-83-P	1.66 (42)	6 (152)	48 (1,219)	0.94	(0.43)
1½	SW	15A-SW-83-P	15C-SW-83-P	1.90 (48)	6 (152)	48 (1,219)	1.35	(0.61)
2	SW	20A-SW-83-P	20C-SW-83-P	2.37 (60)	6 (152)	48 (1,219)	1.55	(0.70)
2½	SW	25A-SW-83-P	25C-SW-83-P	2.88 (73)	6 (152)	48 (1,219)	1.88	(0.85)
3	SW	30A-SW-83-P	30C-SW-83-P	3.50 (89)	6 (152)	48 (1,219)	2.45	(1.11)
4	SW	40A-SW-83-P	40C-SW-83-P	4.46 (113)	6 (152)	48 (1,219)	2.94	(1.34)
4	HW	40A-HW-83-P	40C-HW-83-P	4.51 (114)	6 (152)	48 (1,219)	3.96	(1.80)
5	SW	50A-SW-83-P	50C-SW-83-P	5.52 (140)	6 (152)	48 (1,219)	3.68	(1.67)
5	MW	50A-MW-83-P	50C-MW-83-P	5.57 (141)	6 (152)	48 (1,219)	4.90	(2.23)
5	HW	50A-HW-83-P	50C-HW-83-P	5.60 (142)	6 (152)	48 (1,219)	5.31	(2.41)
6	SW	60A-SW-83-P	60C-SW-83-P	6.58 (167)	6 (152)	48 (1,219)	4.09	(1.86)
6	MW	60A-MW-83-P	60C-MW-83-P	6.63 (168)	6 (152)	48 (1,219)	5.80	(2.63)
6	HW	60A-HW-83-P	60C-HW-83-P	6.66 (169)	6 (152)	48 (1,219)	6.66	(3.02)

Nominal Size	Type	ID Item No. Belowground	ID Item No. Aboveground	M	O-Tangent (min)	R - Radius (min)	Weight lbs	Weight kg
2	SW	20B-SW-83-P	20D-SW-83-P	2.14 (54)	6 (152)	48 (1,219)	1.39	(0.63)
2½	SW	25B-SW-83-P	25D-SW-83-P	2.64 (67)	6 (152)	48 (1,219)	1.72	(0.78)
3	SW	30B-SW-83-P	30D-SW-83-P	3.14 (80)	6 (152)	48 (1,219)	1.96	(0.89)
3½	SW	35B-SW-83-P	35D-SW-83-P	3.64 (92)	6 (152)	48 (1,219)	2.45	(1.11)
4	SW	40B-SW-83-P	40D-SW-83-P	4.14 (105)	6 (152)	48 (1,219)	2.82	(1.28)
4	HW	40B-HW-83-P	40D-HW-83-P	4.19 (106)	6 (152)	48 (1,219)	3.76	(1.71)
4½	SW	45B-SW-83-P	45D-SW-83-P	4.64 (117)	6 (152)	48 (1,219)	3.06	(1.39)
4½	HW	45B-HW-83-P	45D-HW-83-P	4.69 (118)	6 (152)	48 (1,219)	4.25	(1.93)
5	SW	50B-SW-83-P	50D-SW-83-P	5.14 (131)	6 (152)	48 (1,219)	3.47	(1.58)
5	MW	50B-MW-83-P	50D-MW-83-P	5.19 (132)	6 (152)	48 (1,219)	4.61	(2.09)
5	HW	50B-HW-83-P	50D-HW-83-P	5.22 (133)	6 (152)	48 (1,219)	5.39	(2.45)
6	SW	60B-SW-83-P	60D-SW-83-P	6.14 (156)	6 (152)	48 (1,219)	4.16	(1.89)
6	MW	60B-MW-83-P	60D-MW-83-P	6.19 (157)	6 (152)	48 (1,219)	5.51	(2.50)
6	HW	60B-HW-83-P	60D-HW-83-P	6.22 (158)	6 (152)	48 (1,219)	6.45	(2.93)

Nominal Size	Type	Item No. Belowground	Item No. Aboveground	M	O-Tangent (min)	R - Radius (min)	Weight lbs	Weight kg
2	XW	20B-XW-83-P	20D-XW-83-P	2.50 (65)	6 (152)	48 (1,219)	5.15	(2.34)
2½	XW	25B-XW-83-P	25D-XW-83-P	3.00 (76)	6 (152)	48 (1,219)	6.29	(2.85)
3	XW	30B-XW-83-P	30D-XW-83-P	3.50 (89)	6 (152)	48 (1,219)	7.43	(3.37)
3½	XW	35B-XW-83-P	35D-XW-83-P	4.00 (102)	6 (152)	48 (1,219)	8.57	(3.89)
4	XW	40B-XW-83-P	40D-XW-83-P	4.50 (114)	6 (152)	48 (1,219)	9.72	(4.41)
5	XW	50B-XW-83-P	50D-XW-83-P	5.50 (140)	6 (152)	48 (1,219)	12.01	(5.45)
6	XW	60B-XW-83-P	60D-XW-83-P	6.50 (165)	6 (152)	48 (1,219)	14.29	(6.49)

CHAMPION FIBERGLASS®
6400 Spring Stuebner Rd. • Spring, TX 77389 • 281-655-8900 • Fax 281-257-2523
E-mail: info@championfiberglass.com • www.championfiberglass.com

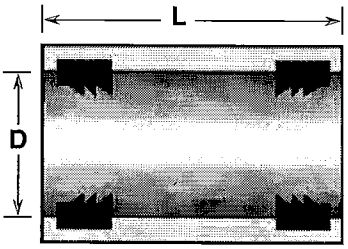

Sleeve Coupling with Gasket

Nominal Size	Type	IPS Item No. Belowground	IPS Item No. Aboveground	D		L		Weight lbs	Weight kg
¾	SW	07A-SW-42-G	07C-SW-42-G	1.06	(27)	8	(203)	0.06	(0.03)
1	SW	10A-SW-42-G	10C-SW-42-G	1.32	(34)	8	(203)	0.08	(0.04)
1¼	SW	12A-SW-42-G	12C-SW-42-G	1.67	(42)	8	(203)	0.10	(0.05)
1½	SW	15A-SW-42-G	15C-SW-42-G	1.91	(49)	8	(203)	0.11	(0.05)
2	SW	20A-SW-42-G	20C-SW-42-G	2.40	(61)	8	(203)	0.70	(0.32)
3	SW	30A-SW-42-G	30C-SW-42-G	3.52	(89)	8	(203)	0.95	(0.43)
4	SW	40A-SW-42-G	40C-SW- 42-G	4.47	(114)	8	(203)	1.30	(0.59)
4	HW	40A-HW-42-G	40C-HW-42-G	4.52	(115)	8	(203)	1.40	(0.64)
5	SW	50A-SW-42-G	50C-SW-42-G	5.54	(141)	8	(203)	1.60	(0.73)
5	MW	50A-MW-42-G	50C-MW-42-G	5.59	(142)	8	(203)	1.80	(0.82)
5	HW	50A-HW-42-G	50C-HW-42-G	5.63	(143)	8	(203)	1.90	(0.86)
6	SW	60A-SW-42-G	60C-SW-42-G	6.61	(168)	8	(203)	2.00	(0.91)
6	MW	60A-MW-42-G	60C-MW-42-G	6.66	(169)	8	(203)	2.10	(0.95)
6	HW	60A-HW-42-G	60C-HW-42-G	6.69	(170)	8	(203)	2.40	(1.09)

Nominal Size	Type	ID Item No. Belowground	ID Item No. Aboveground	D		L		Weight lbs	Weight kg
2	SW	20B-SW-42-G	20D-SW-42-G	2.16	(55)	8	(203)	0.70	(0.32)
2½	SW	25B-SW-42-G	25D-SW-42-G	2.66	(68)	8	(203)	0.80	(0.36)
3	SW	30B-SW-42-G	30D-SW-42-G	3.16	(80)	8	(203)	0.95	(0.43)
3½	SW	35B-SW-42-G	35D-SW-42-G	3.66	(93)	8	(203)	1.20	(0.55)
4	SW	40B-SW-42-G	40D-SW-42-G	4.16	(106)	8	(203)	1.30	(0.59)
4	HW	40B-HW-42-G	40D-HW-42-G	4.20	(107)	8	(203)	1.40	(0.64)
4½	SW	45B-SW-42-G	45D-SW-42-G	4.66	(118)	8	(203)	1.50	(0.68)
4½	HW	45B-HW-42-G	45D-HW-42-G	4.70	(119)	8	(203)	1.60	(0.73)
5	SW	50B-SW-42-G	50D-SW-42-G	5.16	(131)	8	(203)	1.60	(0.73)
5	MW	50B-MW-42-G	50D-MW-42-G	5.20	(132)	8	(203)	1.70	(0.77)
5	HW	50B-HW-42-G	50D-HW-42-G	5.24	(133)	8	(203)	1.80	(0.82)
6	SW	60B-SW-42-G	60D-SW-42-G	6.16	(156)	8	(203)	1.90	(0.86)
6	MW	60B-MW-42-G	60D-MW-42-G	6.20	(157)	8	(203)	1.90	(0.86)
6	HW	60B-HW-42-G	60D-HW-42-G	6.24	(158)	8	(203)	2.00	(0.91)

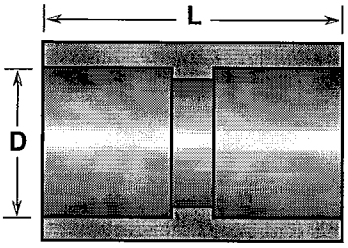

Stop Coupling

Stop coupling is sometimes referred to as a double bell coupling.

Nominal Size	Type	IPS Item No. Belowground	IPS Item No. Aboveground	D		L		Weight lbs	Weight kg
¾	SW	07A-SW-40	07C-SW-40	1.06	(27)	6	(152)	0.07	(0.03)
1	SW	10A-SW-40	10C-SW-40	1.32	(34)	6	(152)	0.08	(0.04)
1¼	SW	12A-SW-40	12C-SW-40	1.67	(42)	6	(152)	0.09	(0.04)
1½	SW	15A-SW-40	15C-SW-40	1.91	(49)	6	(152)	0.11	(0.05)
2	SW	20A-SW-40	20C-SW-40	2.40	(61)	6	(152)	0.20	(0.10)
3	SW	30A-SW-40	30C-SW-40	3.52	(89)	6	(152)	0.30	(0.14)
4	SW	40A-SW-40	40C-SW-40	4.47	(114)	6	(152)	0.43	(0.20)
4	HW	40A-HW-40	40C-HW-40	4.52	(115)	6	(152)	0.58	(0.26)
5	SW	50A-SW-40	50C-SW-40	5.54	(141)	6	(152)	0.50	(0.23)
5	MW	50A-MW-40	50C-MW-40	5.59	(142)	6	(152)	0.70	(0.31)
5	HW	50A-HW-40	50C-HW-40	5.63	(143)	6	(152)	0.90	(0.41)
6	SW	60A-SW-40	60C-SW-40	6.61	(168)	6	(152)	0.65	(0.30)
6	MW	60A-MW-40	60C-MW-40	6.66	(169)	6	(152)	0.85	(0.39)
6	HW	60A-HW-40	60C-HW-40	6.69	(170)	6	(152)	0.95	(0.43)

Nominal Size	Type	ID Item No. Belowground	ID Item No. Aboveground	D		L		Weight lbs	Weight kg
2	SW	20B-SW-40	20D-SW-40	2.16	(55)	6	(152)	0.20	(0.09)
2½	SW	25B-SW-40	25D-SW-40	2.66	(68)	6	(152)	0.25	(0.11)
3	SW	30B-SW-40	30D-SW-40	3.16	(80)	6	(152)	0.30	(0.14)
3½	SW	35B-SW-40	35D-SW-40	3.66	(93)	6	(152)	0.35	(0.16)
4	SW	40B-SW-40	40D-SW-40	4.16	(106)	6	(152)	0.40	(0.18)
4	HW	40B-HW-40	40D-HW-40	4.20	(107)	6	(152)	0.54	(0.25)
4½	SW	45B-SW-40	45D-SW-40	4.66	(118)	6	(152)	0.45	(0.20)
4½	HW	45B-HW-40	45D-HW-40	4.70	(119)	6	(152)	0.60	(0.27)
5	SW	50B-SW-40	50D-SW-40	5.16	(131)	6	(152)	0.50	(0.23)
5	MW	50B-MW-40	50D-MW-40	5.20	(132)	6	(152)	0.68	(0.31)
5	HW	50B-HW-40	50D-HW-40	5.24	(133)	6	(152)	0.80	(0.36)
6	SW	60B-SW-40	60D-SW-40	6.16	(156)	6	(152)	0.60	(0.27)
6	MW	60B-MW-40	60D-MW-40	6.20	(157)	6	(152)	0.80	(0.36)
6	HW	60B-HW-40	60D-HW-40	6.24	(158)	6	(152)	0.92	(0.42)

Nominal Size	Type	Item No. Belowground	Item No. Aboveground	D		L		Weight lbs	Weight kg
2	XW	20B-XW-40	20D-XW-40	2.520	(64)	6	(152)	0.65	(0.29)
2½	XW	25B-XW-40	25D-XW-40	3.025	(77)	6	(152)	0.77	(0.35)
3	XW	30B-XW-40	30D-XW-40	3.520	(89)	6	(152)	0.95	(0.43)
3½	XW	35B-XW-40	35D-XW-40	4.025	(102)	6	(152)	1.12	(0.51)
4	XW	40B-XW-40	40D-XW-40	4.520	(115)	10	(254)	2.00	(0.91)
5	XW	50B-XW-40	50D-XW-40	5.520	(140)	10	(254)	2.50	(1.13)
6	XW	60B-XW-40	60D-XW-40	6.520	(166)	10	(254)	2.90	(1.32)

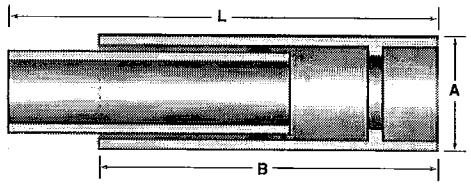

Single Expansion Joint Socket x Spigot with O-Ring

Installation of Expansion Joints:

- When the duct is shorter than 50 ft., no Expansion Joint needed
- When the duct is between 50 ft. up to 200 ft., install one Expansion Joint at the mid point
- If the duct is longer than 200 ft., install one Expansion Joint every 200 ft. apart

Note:
All Expansion Joints have a yellow line on the nipple end of the joint for proper installation.

Nominal Size	Type	IPS Item No. Belowground	IPS Item No. Aboveground	A	B	L - Min	L - Max	Weight lbs	Weight kg
¾	SW	07A-SW-36	07C-SW-36	1.20 (30)	12 (305)	15 (381)	23 (584)	0.39	(0.18)
1	SW	10A-SW-36	10C-SW-36	1.46 (37)	12 (305)	15 (381)	23 (584)	0.44	(0.20)
1¼	SW	12A-SW-36	12C-SW-36	1.81 (46)	12 (305)	15 (381)	23 (584)	0.53	(0.24)
1½	SW	15A-SW-36	15C-SW-36	2.04 (52)	12 (305)	15 (381)	23 (584)	0.76	(0.35)
2	SW	20A-SW-36	20C-SW-36	2.54 (65)	12 (305)	15 (381)	23 (584)	0.87	(0.40)
3	SW	30A-SW-36	30C-SW-36	3.66 (93)	12 (305)	15 (381)	23 (584)	1.38	(0.63)
4	SW	40A-SW-36	40C-SW-36	4.61 (117)	12 (305)	15 (381)	23 (584)	1.66	(0.75)
4	HW	40A-HW-36	40C-HW-36	4.69 (119)	12 (305)	15 (381)	23 (584)	2.23	(1.01)
5	SW	50A-SW-36	50C-SW-36	5.68 (144)	12 (305)	15 (381)	23 (584)	2.07	(0.94)
5	MW	50A-MW-36	50C-MW-36	5.79 (147)	12 (305)	15 (381)	23 (584)	2.76	(1.25)
5	HW	50A-HW-36	50C-HW-36	5.85 (149)	12 (305)	15 (381)	23 (584)	2.99	(1.36)
6	SW	60A-SW-36	60C-SW-36	6.75 (171)	12 (305)	15 (381)	23 (584)	2.30	(1.04)
6	MW	60A-MW-36	60C-MW-36	6.85 (174)	12 (305)	15 (381)	23 (584)	3.27	(1.49)
6	HW	60A-HW-36	60C-HW-36	6.91 (176)	12 (305)	15 (381)	23 (584)	3.75	(1.70)

Nominal Size	Type	ID Item No. Belowground	ID Item No. Aboveground	A	B	L - Min	L - Max	Weight lbs	Weight kg
2	SW	20B-SW-36	20D-SW-36	2.30 (58)	12 (305)	15 (381)	23 (584)	0.78	(0.35)
2½	SW	25B-SW-36	25D-SW-36	2.80 (71)	12 (305)	15 (381)	23 (584)	0.97	(0.44)
3	SW	30B-SW-36	30D-SW-36	3.30 (84)	12 (305)	15 (381)	23 (584)	1.10	(0.50)
3½	SW	35B-SW-36	35D-SW-36	3.80 (96)	12 (305)	15 (381)	23 (584)	1.38	(0.63)
4	SW	40B-SW-36	40D-SW-36	4.30 (109)	12 (305)	15 (381)	23 (584)	1.59	(0.72)
4	HW	40B-HW-36	40D-HW-36	4.39 (111)	12 (305)	15 (381)	23 (584)	2.12	(0.96)
4½	SW	45B-SW-36	45D-SW-36	4.80 (122)	12 (305)	15 (381)	23 (584)	1.73	(0.79)
4½	HW	45B-HW-36	45D-HW-36	4.89 (124)	12 (305)	15 (381)	23 (584)	2.39	(1.09)
5	SW	50B-SW-36	50D-SW-36	5.30 (135)	12 (305)	15 (381)	23 (584)	1.95	(0.89)
5	MW	50B-MW-36	50D-MW-36	5.39 (137)	12 (305)	15 (381)	23 (584)	2.60	(1.18)
5	HW	50B-HW-36	50D-HW-36	5.42 (138)	12 (305)	15 (381)	23 (584)	3.04	(1.38)
6	SW	60B-SW-36	60D-SW-36	6.30 (160)	12 (305)	15 (381)	23 (584)	2.35	(1.07)
6	MW	60B-MW-36	60D-MW-36	6.39 (162)	12 (305)	15 (381)	23 (584)	3.11	(1.41)
6	HW	60B-HW-36	60D-HW-36	6.42 (163)	12 (305)	15 (381)	23 (584)	3.63	(1.65)

Nominal Size	Type	Item No. Belowground	Item No. Aboveground	A	B	L - Min	L - Max	Weight lbs	Weight kg
2	XW	20B-XW-36	20D-XW-36	3.000 (76)	12 (305)	15 (381)	23 (584)	2.90	(1.32)
2½	XW	25B-XW-36	25D-XW-36	3.525 (90)	12 (305)	15 (381)	23 (584)	3.56	(1.61)
3	XW	30B-XW-36	30D-XW-36	4.000 (102)	12 (305)	15 (381)	23 (584)	4.19	(1.90)
3½	XW	35B-XW-36	35D-XW-36	4.525 (115)	12 (305)	15 (381)	23 (584)	4.83	(2.19)
4	XW	40B-XW-36	40D-XW-36	5.000 (127)	14 (356)	19 (482)	27 (686)	6.42	(2.92)
5	XW	50B-XW-36	50D-XW-36	6.000 (152)	14 (356)	19 (482)	27 (686)	7.94	(3.60)
6	XW	60B-XW-36	60D-XW-36	7.000 (178)	14 (356)	19 (482)	27 (686)	10.06	(4.57)

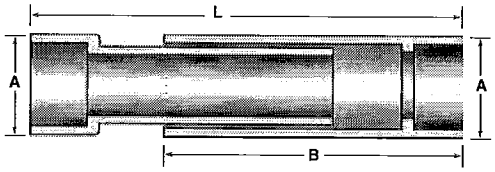

Single Expansion Joint Socket x Socket, no O-Ring

Same instructions & note as above

Nominal Size	Type	IPS Item No. Belowground	IPS Item No. Aboveground	A	B	L - Min	L - Max	Weight lbs	Weight kg
¾	SW	07A-SW-35	07C-SW-35	1.20 (30)	12 (305)	18 (457)	26 (660)	0.49	(0.22)
1	SW	10A-SW-35	10C-SW-35	1.46 (37)	12 (305)	18 (457)	26 (660)	0.55	(0.25)
1¼	SW	12A-SW-35	12C-SW-35	1.81 (46)	12 (305)	18 (457)	26 (660)	0.66	(0.30)
1½	SW	15A-SW-35	15C-SW-35	2.04 (52)	12 (305)	18 (457)	26 (660)	0.76	(0.35)
2	SW	20A-SW-35	20C-SW-35	2.54 (65)	12 (305)	18 (457)	26 (660)	1.09	(0.50)
3	SW	30A-SW-35	30C-SW-35	3.66 (93)	12 (305)	18 (457)	26 (660)	1.73	(0.79)
4	SW	40A-SW-35	40C-SW-35	4.61 (117)	12 (305)	18 (457)	26 (660)	2.07	(0.94)
4	HW	40A-HW-35	40C-HW-35	4.69 (119)	12 (305)	18 (457)	26 (660)	2.79	(1.27)
5	SW	50A-SW-35	50C-SW-35	5.68 (144)	12 (305)	18 (457)	26 (660)	2.59	(1.18)
5	MW	50A-MW-35	50C-MW-35	5.79 (147)	12 (305)	18 (457)	26 (660)	3.45	(1.57)
5	HW	50A-HW-35	50C-HW-35	5.85 (149)	12 (305)	18 (457)	26 (660)	3.74	(1.70)
6	SW	60A-SW-35	60C-SW-35	6.75 (171)	12 (305)	18 (457)	26 (660)	2.88	(1.31)
6	MW	60A-MW-35	60C-MW-35	6.85 (174)	12 (305)	18 (457)	26 (660)	4.08	(1.85)
6	HW	60A-HW-35	60C-HW-35	6.91 (176)	12 (305)	18 (457)	26 (660)	4.69	(2.13)

Nominal Size	Type	ID Item No. Belowground	ID Item No. Aboveground	A	B	L - Min	L - Max	Weight lbs	Weight kg
2	SW	20B-SW-35	20D-SW-35	2.30 (58)	12 (305)	18 (457)	26 (660)	0.98	(0.45)
2½	SW	25B-SW-35	25D-SW-35	2.30 (58)	12 (305)	18 (457)	26 (660)	1.21	(0.55)
3	SW	30B-SW-35	30D-SW-35	3.30 (84)	12 (305)	18 (457)	26 (660)	1.38	(0.63)
3½	SW	35B-SW-35	35D-SW-35	3.80 (96)	12 (305)	18 (457)	26 (660)	1.73	(0.79)
4	SW	40B-SW-35	40D-SW-35	4.30 (109)	12 (305)	18 (457)	26 (660)	1.98	(0.90)
4	HW	40B-HW-35	40D-HW-35	4.39 (111)	12 (305)	18 (457)	26 (660)	2.65	(1.20)
4½	SW	45B-SW-35	45D-SW-35	4.80 (122)	12 (305)	18 (457)	26 (660)	2.16	(0.98)
4½	HW	45B-HW-35	45D-HW-35	4.89 (124)	12 (305)	18 (457)	26 (660)	2.99	(1.36)
5	SW	50B-SW-35	50D-SW-35	5.30 (135)	12 (305)	18 (457)	26 (660)	2.44	(1.11)
5	MW	50B-MW-35	50D-MW-35	5.39 (137)	12 (305)	18 (457)	26 (660)	3.25	(1.48)
5	HW	50B-HW-35	50D-HW-35	5.42 (138)	12 (305)	18 (457)	26 (660)	3.80	(1.73)
6	SW	60B-SW-35	60D-SW-35	6.30 (160)	12 (305)	18 (457)	26 (660)	2.93	(1.33)
6	MW	60B-MW-35	60D-MW-35	6.39 (162)	12 (305)	18 (457)	26 (660)	3.88	(1.76)
6	HW	60B-HW-35	60D-HW-35	6.42 (163)	12 (305)	18 (457)	26 (660)	4.54	(2.07)

Nominal Size	Type	Item No. Belowground	Item No. Aboveground	A	B	L - Min	L - Max	Weight lbs	Weight kg
2	XW	20B-XW-35	20D-XW-35	3.000 (76)	12 (305)	18 (457)	26 (660)	3.62	(1.64)
2½	XW	25B-XW-35	25D-XW-35	3.525 (90)	12 (305)	15 (381)	23 (584)	4.44	(2.01)
3	XW	30B-XW-35	30D-XW-35	4.000 (102)	12 (305)	18 (457)	26 (660)	5.23	(2.37)
3½	XW	35B-XW-35	35D-XW-35	4.525 (115)	12 (305)	15 (381)	23 (584)	6.06	(2.75)
4	XW	40B-XW-35	40D-XW-35	5.000 (127)	14 (356)	22 (559)	32 (812)	7.89	(3.58)
5	XW	50B-XW-35	50D-XW-35	6.000 (152)	14 (356)	22 (559)	32 (812)	9.75	(4.43)
6	XW	60B-XW-35	60D-XW-35	7.000 (178)	14 (356)	22 (559)	32 (812)	12.08	(5.48)

CHAMPION FIBERGLASS®
6400 Spring Stuebner Rd. • Spring, TX 77389 • 281-655-8900 • Fax 281-257-2523
E-mail: info@championfiberglass.com • www.championfiberglass.com

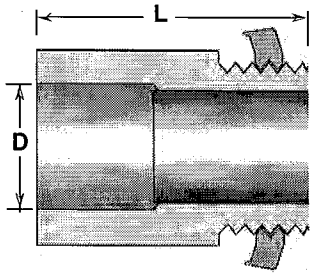

Box Connector

(Straight Threads)

A box connector creates a separable termination into a box. This connector has straight threads (NPS) and is supplied with a locknut. O-ring supplied upon request.

Nominal Size	Type	IPS Item No. Belowground	IPS Item No. Aboveground	D		L		Weight lbs	Weight kg
¾	SW	07A-SW-30	07C-SW-30	1.06	(27)	3	(76)	0.11	(.05)
1	SW	10A-SW-30	10C-SW-30	1.32	(34)	3	(76)	0.22	(.10)
1¼	SW	12A-SW-30	12C-SW-30	1.67	(42)	3	(76)	0.25	(.12)
1½	SW	15A-SW-30	15C-SW-30	1.91	(49)	3	(76)	0.29	(.13)
2	SW	20A-SW-30	20C-SW-30	2.40	(61)	5	(127)	0.85	(.39)
3	SW	30A-SW-30	30C-SW-30	3.52	(89)	5	(127)	1.28	(.58)
4	SW	40A-SW-30	40C-SW-30	4.47	(114)	5	(127)	2.09	(.95)
4	HW	40A-HW-30	40C-HW-30	4.52	(115)	5	(127)	2.09	(.95)
5	SW	50A-SW-30	50C-SW-30	5.54	(141)	5	(127)	2.75	(1.25)
5	MW	50A-MW-30	50C-MW-30	5.59	(142)	5	(127)	2.75	(1.25)
5	HW	50A-HW-30	50C-HW-30	5.63	(143)	5	(127)	2.75	(1.25)
6	SW	60A-SW-30	60C-SW-30	6.61	(168)	5	(127)	2.97	(1.35)
6	MW	60A-MW-30	60C-MW-30	6.66	(169)	5	(127)	2.97	(1.35)
6	HW	60A-HW-30	60C-HW-30	6.69	(170)	5	(127)	2.97	(1.35)

Nominal Size	Type	ID Item No. Belowground	ID Item No. Aboveground	D		L		Weight lbs	Weight kg
2	SW	20B-SW-30	20D-SW-30	2.16	(55)	5	(127)	0.85	(.39)
2½	SW	25B-SW-30	25D-SW-30	2.66	(68)	5	(127)	0.94	(.43)
3	SW	30B-SW-30	30D-SW-30	3.16	(80)	5	(127)	1.28	(.58)
3½	SW	35B-SW-30	35D-SW-30	3.66	(93)	5	(127)	1.77	(.80)
4	SW	40B-SW-30	40D-SW-30	4.16	(106)	5	(127)	2.09	(.95)
4	HW	40B-HW-30	40D-HW-30	4.20	(107)	5	(127)	2.09	(.95)
4½	SW	45B-SW-30	45D-SW-30	4.66	(118)	5	(127)	2.40	(1.08)
4½	HW	45B-HW-30	45D-HW-30	4.70	(119)	5	(127)	2.40	(1.08)
5	SW	50B-SW-30	50D-SW-30	5.16	(131)	5	(127)	2.75	(1.25)
5	MW	50B-MW-30	50D-MW-30	5.20	(132)	5	(127)	2.75	(1.25)
5	HW	50B-HW-30	50D-HW-30	5.24	(133)	5	(127)	2.75	(1.25)
6	SW	60B-SW-30	60D-SW-30	6.16	(156)	5	(127)	2.97	(1.35)
6	MW	60B-MW-30	60D-MW-30	6.20	(157)	5	(127)	2.97	(1.35)
6	HW	60B-HW-30	60D-HW-30	6.24	(158)	5	(127)	2.97	(1.35)

Nominal Size	Type	Item No. Belowground	Item No. Aboveground	D		L		Weight lbs	Weight kg
2	XW	20B-XW-30	20D-XW-30	2.520	(64)	5	(127)	0.85	(0.39)
2½	XW	25B-XW-30	25D-XW-33	3.025	(77)	5	(127)	0.94	(0.43)
3	XW	30B-XW-30	30D-XW-30	3.520	(89)	5	(127)	1.28	(0.58)
3½	XW	35B-XW-30	35D-XW-33	4.025	(102)	5	(127)	1.77	(0.80)
4	XW	40B-XW-30	40D-XW-30	4.520	(115)	7	(165)	2.09	(0.95)
5	XW	50B-XW-30	50D-XW-30	5.520	(140)	7	(165)	2.75	(1.25)
6	XW	60B-XW-30	60D-XW-30	6.520	(166)	7	(165)	2.97	(1.35)
8	XW	80A-XW-30	80C-XW-30	8.920	(227)	8	(203)	5.24	(2.37)

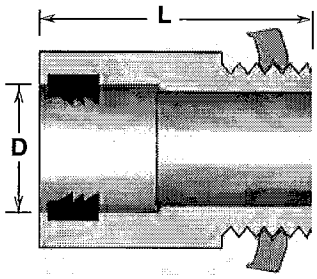

Box Connector with Gasket

(Straight Threads)

A box connector creates a separable termination into a box. This connector has straight threads (NPS) and is supplied with a locknut. O-ring supplied upon request.

Nominal Size	Type	IPS Item No. Belowground	IPS Item No. Aboveground	D		L		Weight lbs	Weight kg
¾	SW	07A-SW-30-G	07C-SW-30-G	1.06	(27)	3	(102)	0.08	(.04)
1	SW	10A-SW-30-G	10C-SW-30-G	1.32	(34)	3	(102)	0.08	(.04)
1¼	SW	12A-SW-30-G	12C-SW-30-G	1.67	(42)	3	(102)	0.15	(.07)
1½	SW	15A-SW-30-G	15C-SW-30-G	1.91	(49)	3	(102)	0.15	(.07)
2	SW	20A-SW-30-G	20C-SW-30-G	2.40	(61)	5	(127)	0.83	(0.38)
3	SW	30A-SW-30-G	30C-SW-30-G	3.52	(89)	5	(127)	1.10	(0.50)
4	SW	40A-SW-30-G	40C-SW-30-G	4.47	(114)	5	(127)	1.25	(0.57)
4	HW	40A-HW-30-G	40C-HW-30-G	4.52	(115)	5	(127)	1.25	(0.57)
5	SW	50A-SW-30-G	50C-SW-30-G	5.54	(141)	5	(127)	1.70	(0.77)
5	MW	50A-MW-30-G	50C-MW-30-G	5.59	(142)	5	(127)	1.65	(0.75)
5	HW	50A-HW-30-G	50C-HW-30-G	5.63	(143)	5	(127)	1.60	(0.73)
6	SW	60A-SW-30-G	60C-SW-30-G	6.61	(168)	5	(127)	2.20	(1.00)
6	MW	60A-MW-30-G	60C-MW-30-G	6.66	(169)	5	(127)	2.00	(0.91)
6	HW	60A-HW-30-G	60C-HW-30-G	6.69	(170)	5	(127)	1.80	(0.82)

Nominal Size	Type	ID Item No. Belowground	ID Item No. Aboveground	D		L		Weight lbs	Weight kg
2	SW	20B-SW-30-G	20D-SW-30-G	2.16	(55)	5	(127)	0.65	(0.30)
2½	SW	25B-SW-30-G	25D-SW-30-G	2.66	(68)	5	(127)	0.80	(0.36)
3	SW	30B-SW-30-G	30D-SW-30-G	3.16	(80)	5	(127)	0.90	(0.41)
3½	SW	35B-SW-30-G	35D-SW-30-G	3.66	(93)	5	(127)	1.00	(0.45)
4	SW	40B-SW-30-G	40D-SW-30-G	4.16	(106)	5	(127)	1.40	(0.64)
4	HW	40B-HW-30-G	40D-HW-30-G	4.20	(107)	5	(127)	1.30	(0.59)
4½	SW	45B-SW-30-G	45D-SW-30-G	4.66	(118)	5	(127)	1.60	(0.73)
4½	HW	45B-HW-30-G	45D-HW-30-G	4.70	(119)	5	(127)	1.50	(0.68)
5	SW	50B-SW-30-G	50D-SW-30-G	5.16	(131)	5	(127)	1.60	(0.73)
5	MW	50B-MW-30-G	50D-MW-30-G	5.20	(132)	5	(127)	1.40	(0.64)
5	HW	50B-HW-30-G	50D-HW-30-G	5.24	(133)	5	(127)	1.28	(0.58)
6	SW	60B-SW-30-G	60D-SW-30-G	6.16	(156)	5	(127)	2.30	(1.04)
6	MW	60A-MW-30-G	60D-MW-30-G	6.20	(157)	5	(127)	2.10	(0.95)
6	HW	60B-HW-30-G	60D-HW-30-G	6.24	(158)	5	(127)	1.90	(0.86)

CHAMPION FIBERGLASS®
6400 Spring Stuebner Rd. • Spring, TX 77389 • 281-655-8900 • Fax 281-257-2523
E-mail: info@championfiberglass.com • www.championfiberglass.com