BUTTERFLY SIGN SUPPORT STRUCTURES		
DMS SITE	STEEL POST SPOOL	
LOCATION	H (FT)	SIZE OD x THICK (IN)
SB I-270 AT CLAYTON ROAD	3	18 X $\frac{3}{4}$
SB I-270 SOUTH OF MANCHESTER ROAD	7	18 X $\frac{3}{4}$
SB I-270 SOUTH OF GRAVOIS ROAD	3	18 X $\frac{3}{4}$
NB I-270 NORTH OF TESSON FERRY ROAD	5	18 X $\frac{3}{4}$
NB I-270 NORTH OF DOUGHERTY FERRY ROAD	4	18 X $\frac{3}{4}$

POST BASE PLATE ASSEMBLY												
POST O.D. x THICKNESS	BASE PLATE								BRACKET PLATES			
	B	C	F	H	S	R	T	FILLET WELD	I	G	W	FILLET WELD
18" X $\frac{3}{4}$"	2'-1$\frac{1}{2}$"	3'-0$\frac{1}{2}$"	18"	3$\frac{5}{16}$"	2'-5"	5$\frac{1}{2}$"	3"	$\frac{1}{2}$"	12"	5"	$\frac{3}{4}$"	$\frac{1}{2}$"

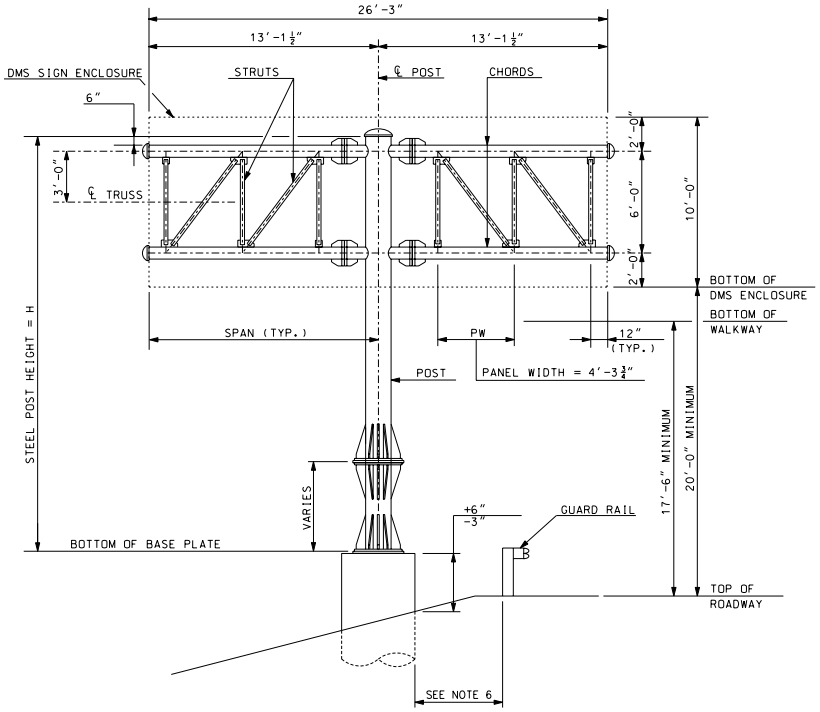

TYPICAL BUTTERFLY SIGN SUPPORT ELEVATION

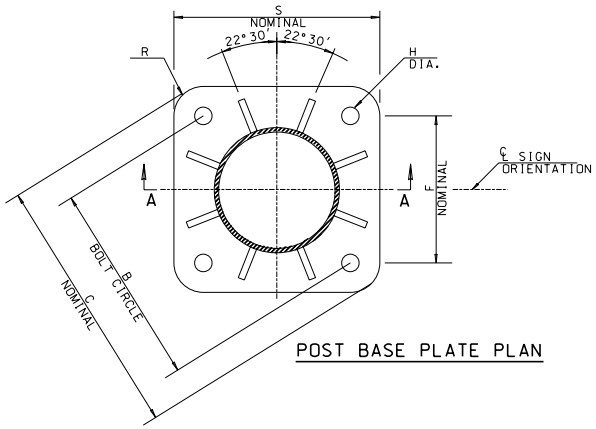

POST BASE PLATE PLAN

NOTES:

1. ALL ELEVATIONS SHALL BE VERIFIED BY THE CONTRACTOR IN THE FIELD PRIOR TO FABRICATION AND INSTALLATION.
2. MANUFACTURER MUST VERIFY DIMENSIONS AND SUBMIT TO THE ENGINEER PRIOR TO FABRICATION.
3. BOLTS ANCHORING THE SPOOL TO THE POST BASE PLATE SHOULD BE ORDERED WITH THE SPOOL. NO EXTRA PAYMENT WILL BE MADE FOR ANCHOR BOLTS.

PARSONS BRINCKERHOFF
1832
1831 Chestnut Street, Suite 700, St. Louis, MO 63103-2225
Phone: 314-421-1476, Fax: 314-421-1741

SCHEDULE OF
BUTTERFLY SIGN STRUCTURES
SPECIAL SHEET 2 OF 2

ROUTE	STATE	DISTRICT	SHEET NO.
	MO	6	

JOB NO.

COUNTY ST. LOUIS

REV.

Y:\35967B_I-270_DMS_Support\7.0 Workfile\Design\Plan Sheets\c-det-07.dgn 8:53:18 AM 1/5/2007