Matchline Exercise

1. Open the MicroStation file t:\de-proj\cole\j5p0100\data\rte50_pattern_shape.dgn.

2. In the project j5p0100.prj, copy the working alignment Route50 to 50-match, and select this working alignment.

3. In the 50-match working alignment definition, under the Shape section, change the colors to 1,3,5,6.

   Close the working alignment definition box.

4. Create the matchline locations as follows:

   Use the copy parallel tool to copy the Ramp1 shoulder 12’ right.

   Use the copy parallel tool to copy the Ramp1 shoulder 20’ right.

   Use the copy parallel tool to copy the Route50 shoulder 24’ left.

   Intersect the line that is 12’ offset from the ramp shoulder and the line that is offset 24’ from the Route50 shoulder.

   Trim the line that is 20’ offset from the ramp shoulder to the line that is offset 24’ from the Route50 shoulder.

   Draw a line from the 2 intersected lines to the gore point as shown.

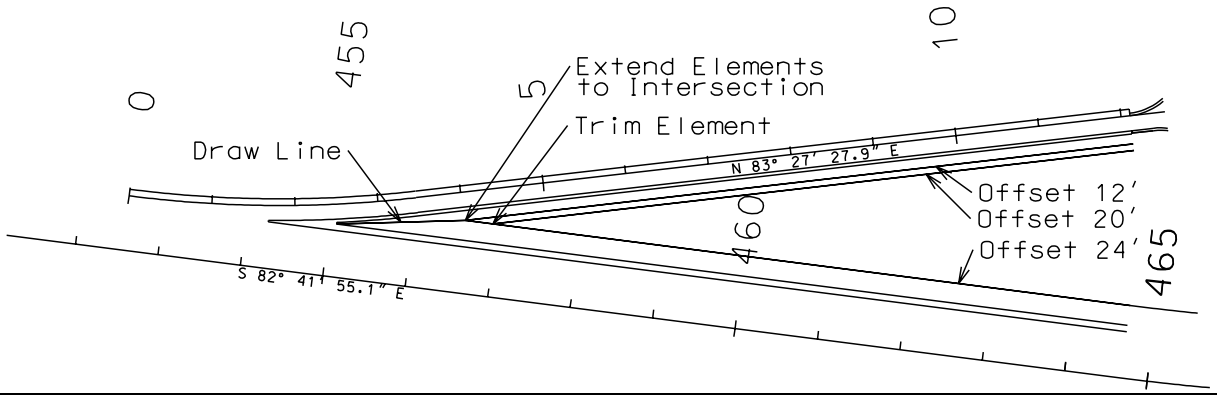

5. From Project Manager select Draw Pattern. Copy the MoDOT run to 50-match.

6. Create pattern lines for the alignment.

   Job: **100**
   Chain: **Route50**
   Beginning
   Offset LT: **200**
   Station: *Beginning of Chain*
   Offset RT: **200**
   Ending
   Offset LT: **200**
   Station: **491+00**
   Offset RT: **200**

   Even **100**

7. From the Project Manager, copy the working alignment Ramp1 to r1-match, and select this working alignment.

8. In the r1-match working alignment definition, under the Shape section, change the colors to 4.

   Under the Pattern section, change the color to 4.

   Close the working alignment definition box.

9. From Project Manager select Draw Pattern. Copy the MoDOT run to r1-match.

10. Create pattern lines for the alignment.

Job: **100**
Chain: **Ramp1**
Beginning
Offset LT: **100**
Station: **2+00**
Offset RT: **100**
Ending
Offset LT: **100**
Station: **12+00**
Offset RT: **100**

Even **100**

11. Create pattern lines at stations 4+02.11 and 4+34.58 for the alignment Ramp1. Use the same offsets as specified previously.

12. Trim the pattern lines for both Route50 and Ramp1 to the lines indicated in the drawing.

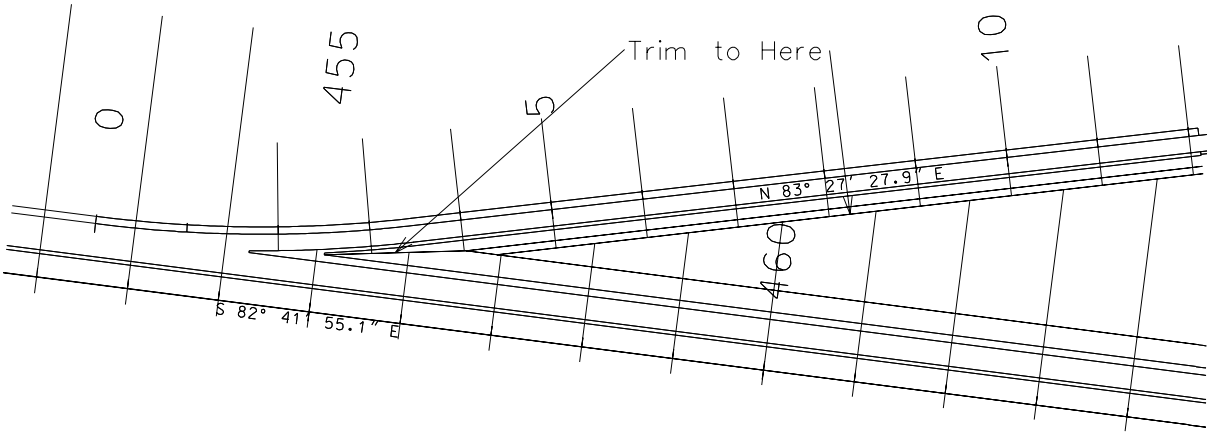

13. Open the MicroStation file t:\de-proj\cole\j5p0100\data\ ramp1_xs_matchline.dgn.

14. From Project Manager select Existing Ground Cross Sections. Copy the MoDOT run to r1-match.

15. Verify the settings on the XS Cells and Surfaces tabs.

16. Cut the existing ground cross sections.

17. In the r1-match working alignment, under the Cross Section View section, change the XS DGN File to ramp1_xs_matchline.dgn. Close the working alignment definition box.

18. Select the Proposed Cross Sections Dialog. Copy the MoDOT run to r1-match.

19. Add the following Shape Clusters.

```
shape cluster baseline  = RAMP1
shape cluster profile   = RAMP1PR
shape cluster tie       = 0.000
  side slope LT
    include t:\gpk_std\criteria\Setup.x
    include t:\gpk_std\criteria\pvmt_layers.x
    include t:\gpk_std\criteria\shldr_a_c.x
    include t:\gpk_std\criteria\sideslope.x

  side slope RT
    include t:\gpk_std\criteria\Setup.x
    include t:\gpk_std\criteria\pvmt_layers.x
    include t:\gpk_std\criteria\shldr_a_c.x
    include t:\gpk_std\criteria\sideslope.x
```

20. In the **Define Variables** set the following values for the given variables:

"NAME OF PLAN FILE"	ramp1_plan.dgn
"NAME OF CROSS-SECTION FILE"	ramp1_xs_matchline.dgn
"NAME OF SHAPE/PATTERN FILE"	rte50_pattern_shape.dgn
"NAME OF BASELINE"	ramp1
"PAVEMENT LAYER 1 THICKNESS (MM OR IN)"	12
"AGGREGATE LAYER 1 THICKNESS (MM OR IN)"	4
"FILL SLOPE 1 WIDTH (M OR FT)"	12
"DITCH DEPTH (M OR FT)"	2

Leave the remaining variables set to the defaults.

21. Process the cross sections.

22. Use the Profile Grade report to create a chain and profile at the cross section point MATCHPTR.

    Begin at station 3+00.

    Name the chain and profile MATCHR

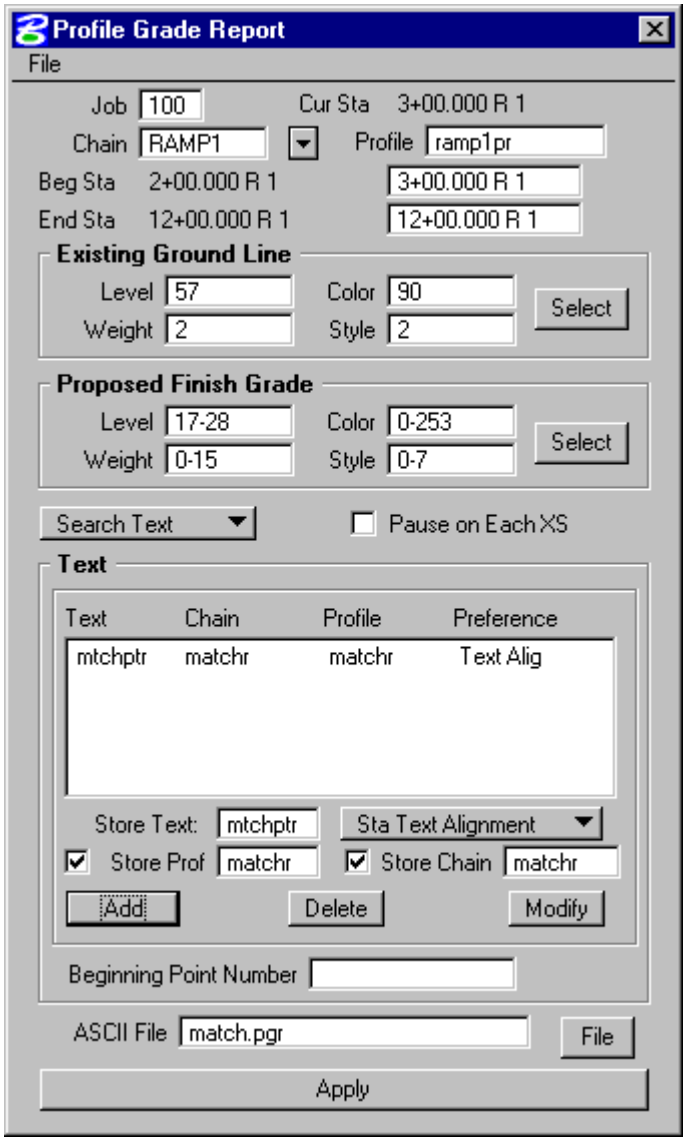

23. Select the 50-match Working Alignment.

24. Open the MicroStation file t:\de-proj\cole\j5p0100\data\ rte50_xs_matchline.dgn.

25. From Project Manager select Existing Ground Cross Sections. Copy the MoDOT run to 50-match.

26. Verify the settings on the XS Cells and Surfaces tabs.

27. Cut the existing ground cross sections.

28. In the 50-match working alignment, under the Cross Section View section, change the XS DGN File to rte50_xs_matchline.dgn. Close the working alignment definition box.

29. Select the Proposed Cross Sections Dialog. Copy the MoDOT run to 50-match.

30. Add the following Shape Clusters.

```
shape cluster baseline  = ROUTE50
shape cluster profile   = ROUTE50PR
shape cluster tie       = -30.000
  side slope LT where  Station  < 454+26.585 or  Station  > 464+38.825
    include t:\gpk_std\criteria\Setup.x
    include t:\gpk_std\criteria\pvmt_layers.x
    include t:\gpk_std\criteria\shldr_a_c.x
    include t:\gpk_std\criteria\sideslope.x

  side slope LT where  Station  >= 454+26.585 and  Station  < 455+08.57
    include t:\gpk_std\criteria\Setup.x
    include t:\gpk_std\criteria\pvmt_layers.x
    include t:\gpk_std\criteria\pvmt_vertical_cap.x

  side slope LT where  Station  >= 455+08.57 and  Station  <= 464+38.825
    include t:\gpk_std\criteria\Setup.x
    include t:\gpk_std\criteria\pvmt_layers.x
    include t:\gpk_std\criteria\shldr_a_c.x
    include t:\gpk_std\criteria\berm_to_chain&profile.x

  side slope RT
    include t:\gpk_std\criteria\Setup.x
    include t:\gpk_std\criteria\pvmt_layers.x
    include t:\gpk_std\criteria\shldr_a_c.x
    include t:\gpk_std\criteria\median_ditch.x

shape cluster baseline  = ROUTE50
shape cluster profile   = ROUTE50PR
shape cluster tie       = 30.000
  side slope LT
    include t:\gpk_std\criteria\Setup.x
    include t:\gpk_std\criteria\pvmt_layers.x
    include t:\gpk_std\criteria\shldr_a_c.x
    include t:\gpk_std\criteria\median_ditch.x

  side slope RT
    include t:\gpk_std\criteria\Setup.x
    include t:\gpk_std\criteria\pvmt_layers.x
    include t:\gpk_std\criteria\shldr_a_c.x
    include t:\gpk_std\criteria\sideslope.x
```

31. In the **Define Variables** set the following values for the given variables:

"NAME OF PLAN FILE"	rte50_plan_matchline.dgn
"NAME OF CROSS-SECTION FILE"	rte50_xs_matchline.dgn
"NAME OF SHAPE/PATTERN FILE"	rte50_pattern_shape.dgn
"NAME OF BASELINE"	route50
"PAVEMENT LAYER 1 THICKNESS (MM OR IN)"	12
"AGGREGATE LAYER 1 THICKNESS (MM OR IN)"	4
"LEFT BERM SLOPE (%, G TO USE EXISTING GROUND)"	16.667
"LEFT BERM PROFILE"	matchr
"LEFT BERM CHAIN"	matchr
"RIGHT BERM SLOPE (%, G TO USE EXISTING GROUND)"	25
"DRAW VERTICAL LINE TO EXISTING GROUND (Y OR N)"	Y

Leave the remaining variables set to the defaults.

32. Process the cross sections.