MISSOURI
HIGHWAYS and TRANSPORTATION COMMISSION

JEFFERSON CITY, MISSOURI

SUPPLEMENTAL PLANS TO JULY 2009 MISSOURI STANDARD PLANS FOR HIGHWAY CONSTRUCTION

EFFECTIVE October 1, 2013

EFFECTIVE: 10/01/2013

MISSOURI HIGHWAYS AND TRANSPORTATION COMMISSION

MISSOURI STANDARD PLANS FOR HIGHWAY CONSTRUCTION

TABLE OF CONTENTS

STANDARD NO.	DRAWING TITLE	NO. OF SHEETS	EFFECTIVE DATE
203.00E	EXCAVATION AND EMBANKMENT - TYPICAL DETAILS	1	08/01/1998
203.02F	UNDERGRADING - TYPICAL DETAILS	2	01/01/2004
203.10D	TABULATED EARTHWORK AND SECTION DATA	1	02/01/2009
203.20F	SUPERELEVATION SPIRALS AND WIDENING (UNDIVIDED HIGHWAY)	5	04/01/2002
203.21J	SUPERELEVATION SPIRALS AND WIDENING (DIVIDED HIGHWAY)	5	04/01/2002
203.35A	MAILBOX TURNOUTS	1	08/01/1981
203.40G	TYPICAL DETAILS ON AND OFF RAMP	2	10/01/2007
203.41F	TYPICAL DETAILS ON AND OFF RAMPS (ROADWAY WITH 6:1 FORESLOPE)	2	01/01/1995
203.50M	TYPICAL MEDIAN OPENINGS (DIVIDED HIGHWAYS) *	2	07/01/2004
203.61A	DRIVEWAY - TYPE I	1	07/01/2004
203.62C	DRIVEWAY - TYPE II	2	07/01/2004
203.63A	DRIVEWAY - TYPE III	2	01/01/1992
203.64C	DRIVEWAY - TYPE IV	2	07/01/2004
203.65A	DRIVEWAY - TYPE V	1	10/01/1998
204.00D	EMBANKMENT CONTROL - MEASURING DEVICES	1	04/01/1983
204.30	PORE PRESSURE MEASUREMENT DEVICES	1	03/01/1996
401.00A	TYPE A2 AND A3 SHOULDERS	2	04/01/2009
413.20	SCRUB SEAL BROOM CONFIGURATION	1	07/01/2004
502.05M	CONCRETE PAVEMENT AND BASE APPURTENANCES FOR 15 FT. JOINT SPACING *	4	06/01/2010
502.10K	DOWEL SUPPORTING UNITS *	2	06/01/2010
504.00H	CONCRETE APPROACH PAVEMENT	3	08/01/2007
602.00D	RIGHT-OF-WAY AND DRAIN MARKERS	2	01/01/2003
604.05D	PIPE CULVERT HEADWALLS - TYPE S	2	08/01/2006
604.10E	PIPE CULVERT HEADWALL - ENERGY DISSIPATOR FOR 18" CONCRETE PIPE	1	07/01/2001
604.11E	PIPE CULVERT HEADWALL - ENERGY DISSIPATOR FOR 24" CONCRETE PIPE	1	07/01/2001
604.12E	PIPE CULVERT HEADWALL - ENERGY DISSIPATOR FOR 30" CONCRETE PIPE	1	07/01/2001
604.13E	PIPE CULVERT HEADWALL - ENERGY DISSIPATOR FOR 36" CONCRETE PIPE	1	07/01/2001
604.14E	PIPE CULVERT HEADWALL - ENERGY DISSIPATOR FOR 42" CONCRETE PIPE	1	07/01/2001
604.15E	PIPE CULVERT HEADWALL - ENERGY DISSIPATOR FOR 48" CONCRETE PIPE	1	07/01/2001
604.29C	DROP INLET - TYPE X	2	04/01/1983
604.30F	CONCRETE MANHOLES	2	04/01/1983
604.40F	PIPE COLLARS	2	10/01/2000
604.70	SLOTTED DRAIN	2	03/01/1994
605.10I	PAVEMENT UNDERDRAINAGE *	4	06/01/2013
606.00AT	GUARDRAIL *	8	08/01/2012
606.01F	MEDIAN PIER PROTECTION *	9	08/01/2012
606.22T	BRIDGE ANCHOR SECTION - SAFETY BARRIER CURB ON BRIDGE *	5	08/01/2012
606.23I	BRIDGE ANCHOR SECTION (THRIE BEAM RAIL ON BRIDGE) *	5	08/01/2012
606.30G	GUARDRAIL (TERMINAL ENDS) *	8	11/01/2012
606.40D	ONE-STRAND ACCESS RESTRAINT CABLE	2	07/01/2004
606.41J	THREE-STRAND GUARD CABLE *	7	01/01/2005
607.10V	CHAIN-LINK FENCE	1	02/01/2007
607.11H	CHAIN-LINK FENCE FOR RETAINING WALLS	1	06/01/2009
607.20F	WOVEN WIRE FENCE	2	10/01/1998
608.00H	PAVED APPROACHES	2	10/01/2009
608.10N	CONCRETE SIDEWALK AND CURB RAMPS *	4	10/01/2009
608.20D	CONCRETE STAIRS	2	10/01/1992
608.30A	CONCRETE MEDIAN STRIP *	1	02/01/2011
609.00P	CONCRETE CURB, CURB AND GUTTER AND GUTTER *	2	08/01/2008
609.15C	PAVED DITCHES	1	03/01/1993
609.40P	DRAIN BASIN, SHOULDER PAVING AND FILL SLOPES AT BRIDGE ENDS	2	02/01/2009
609.60C	ROCK DITCH LINER	1	03/01/1993
609.70C	ROCK LINING FOR CULVERT OUTLET	1	10/01/1981
611.60Q	CONCRETE SLOPE PROTECTION	1	01/01/2005
612.20D	SAND FILLED IMPACT ATTENUATORS	1	08/01/2008
613.00P	PAVEMENT REPAIR *	3	06/01/2010
614.10T	GRATES AND BEARING PLATES	1	12/01/2005
614.11C	CURVED VANE GRATE AND FRAME *	1	06/01/2010
614.30E	MANHOLE FRAMES AND COVERS	2	07/01/1996
616.10AQ	TEMPORARY TRAFFIC CONTROL DEVICES *	8	08/01/2012
617.10H	PERMANENT CONCRETE TRAFFIC BARRIER *	12	08/01/2012
617.20C	TEMPORARY CONCRETE TRAFFIC BARRIER	6	06/01/2008
619.10G	PAVEMENT EDGE TREATMENT *	1	05/01/2012
620.00J	PAVEMENT MARKING *	5	12/01/2009
620.10C	TEMPORARY PAVEMENT MARKING *	4	07/01/2011
620.20	SNOWPLOWABLE RAISED PAVEMENT MARKERS	4	01/01/2003
625.00	HOLE PATTERN FOR PAVEMENT SLAB STABILIZATION	1	10/01/1998
626.00H	RUMBLE STRIPS	2	04/01/2009
702.02F	CAST-IN-PLACE CONCRETE PILES (APPROVED TYPES)	1	07/01/2004

* REVISED OR ADDED SINCE OCTOBER 2009

IF A SEAL IS PRESENT ON THIS SHEET IT HAS BEEN ELECTRONICALLY SEALED AND DATED.

MISSOURI HIGHWAYS AND TRANSPORTATION COMMISSION

MISSOURI STANDARD PLANS FOR HIGHWAY CONSTRUCTION

TABLE OF CONTENTS

STANDARD NO.	DRAWING TITLE		NO. OF SHEETS	EFFECTIVE DATE
703.10H	CONCRETE SINGLE BOX STRUCTURE - STRAIGHT WINGS (SQUARE)	*	3	04/01/2011
703.11H	CONCRETE SINGLE BOX STRUCTURE - FLARED WINGS (SQUARE)	*	3	04/01/2011
703.12H	CONCRETE SINGLE BOX STRUCTURE - STRAIGHT WINGS (LEFT ADVANCE)	*	3	04/01/2011
703.13H	CONCRETE SINGLE BOX STRUCTURE - FLARED WINGS (LEFT ADVANCE)	*	3	04/01/2011
703.14H	CONCRETE SINGLE BOX STRUCTURE - STRAIGHT WINGS (RIGHT ADVANCE)	*	3	04/01/2011
703.15D	CONCRETE SINGLE BOX STRUCTURE - FLARED WINGS (RIGHT ADVANCE)	*	3	04/01/2011
703.16	CONCRETE SINGLE BOX STRUCTURE - CUT SECTION	*	1	04/01/2011
703.17	CONCRETE SINGLE BOX STRUCTURE - MEMBER SIZES AND REINFORCEMENT	*	14	04/01/2011
703.37C	CONCRETE BOX STRUCTURE - EXTERIOR WING REINFORCEMENT	*	2	04/01/2011
703.38A	CONCRETE BOX STRUCTURE - CUTTING DETAILS		2	10/01/2009
703.40H	CONCRETE DOUBLE BOX STRUCTURE - STRAIGHT WINGS (SQUARE)	*	3	10/01/2011
703.41H	CONCRETE DOUBLE BOX STRUCTURE - FLARED WINGS (SQUARE)	*	3	10/01/2011
703.42H	CONCRETE DOUBLE BOX STRUCTURE - STRAIGHT WINGS (LEFT ADVANCE)	*	3	10/01/2011
703.43H	CONCRETE DOUBLE BOX STRUCTURE - FLARED WINGS (LEFT ADVANCE)	*	3	10/01/2011
703.44H	CONCRETE DOUBLE BOX STRUCTURE - STRAIGHT WINGS (RIGHT ADVANCE)	*	3	10/01/2011
703.45C	CONCRETE DOUBLE BOX STRUCTURE - FLARED WINGS (RIGHT ADVANCE)	*	3	10/01/2011
703.46	CONCRETE BOX STRUCTURE - CUT SECTION	*	1	10/01/2011
703.47	CONCRETE BOX STRUCTURE - MEMBER SIZES AND REINFORCEMENT	*	27	10/01/2011
703.60E	CONCRETE BOX STRUCTURE - PIPE INLET		1	07/01/2001
703.80H	CONCRETE TRIPLE BOX CULVERT - STRAIGHT WINGS (SQUARE)	*	3	12/01/2011
703.81H	CONCRETE TRIPLE BOX CULVERT - FLARED WINGS (SQUARE)	*	3	12/01/2011
703.82H	CONCRETE TRIPLE BOX CULVERT - STRAIGHT WINGS (LEFT ADVANCE)	*	3	12/01/2011
703.83H	CONCRETE TRIPLE BOX CULVERT - FLARED WINGS (LEFT ADVANCE)	*	3	12/01/2011
703.84H	CONCRETE TRIPLE BOX CULVERT - STRAIGHT WINGS (RIGHT ADVANCE)	*	3	12/01/2011
703.85H	CONCRETE TRIPLE BOX CULVERT - FLARED WINGS (RIGHT ADVANCE)	*	3	12/01/2011
703.86H	CONCRETE TRIPLE BOX CULVERT - CUT SECTIONS	*	1	12/01/2011
703.87H	CONCRETE TRIPLE BOX CULVERT - MEMBER SIZES AND REINFORCEMENT	*	27	12/01/2011
706.35H	BAR SUPPORTS FOR CONCRETE REINFORCEMENT		1	07/01/2004
712.40J	STEEL DAMS AT EXPANSION DEVICES		1	07/01/2004
725.00C	CORRUGATED METAL PIPE INSTALLATION METHODS	*	5	04/01/2011
725.31C	METAL CURTAIN WALL AND METAL INLETS		1	07/01/2004
726.30H	RIGID CULVERT INSTALLATION METHODS	*	2	02/01/2012
730.00D	CORRUGATED POLYETHYLENE AND POLYVINYL CHLORIDE PIPE INSTALLATION METHODS	*	1	04/01/2011
731.00T	PRECAST MANHOLES		2	10/01/1998
731.10R	PRECAST DROP INLET		8	12/01/2005
732.00Q	FLARED END SECTION	*	3	06/01/2013
732.05C	BEVELED PIPE END TREATMENT		2	07/01/2004
732.10H	SAFETY SLOPE END SECTION	*	3	06/01/2013
806.10H	TEMPORARY EROSION CONTROL MEASURES	*	7	04/01/2009
808.00	TYPICAL PLANTING ILLUSTRATIONS		3	07/01/2004
901.00Z	HIGHWAY LIGHTING - POLES, FOUNDATIONS & APPURTENANCES FOR 30' M.H.	*	4	02/01/2011
901.01AG	HIGHWAY LIGHTING - POLES, FOUNDATIONS & APPURTENANCES FOR 45' M.H.	*	6	02/01/2011
901.02B	HIGHWAY LIGHTING - CABLE, CONDUIT AND TRENCHING		1	04/01/2002
901.30F	HIGHWAY LIGHTING - BASE MOUNTED CONTROL STATION		2	04/01/2005
901.80D	HIGHWAY LIGHTING - POWER SUPPLY ASSEMBLY - SECONDARY SERVICE		2	04/01/2002
901.85A	HIGHWAY LIGHTING SYMBOLS		1	01/01/2003
902.00M	TRAFFIC SIGNALS - SIGNAL HEADS MOUNTING - LOUVERS		2	04/01/2008
902.10Q	TRAFFIC SIGNALS - CONTROLLERS CONDUIT LOCATION		1	04/01/2005
902.15K	TRAFFIC SIGNALS - POWER SUPPLY ASSEMBLY		3	07/01/2004
902.20G	TRAFFIC SIGNALS - CONCRETE PULL BOXES	*	3	11/01/2010
902.21C	TRAFFIC SIGNALS - TELEPHONE INTERCONNECT		1	03/01/1996
902.30P	TRAFFIC SIGNALS - POST BASES	*	2	02/01/2008
902.40Q	TRAFFIC SIGNALS - TUBULAR STEEL POSTS	*	3	02/01/2008
902.50L	TRAFFIC SIGNALS - INDUCTION LOOP DETECTORS		2	06/01/2009
902.70P	TRAFFIC SIGNALS - RIGID SPAN WIRE DETAILS		2	02/01/2008
902.80J	TRAFFIC SIGNALS - RIDID SPAN WIRE DETAILS SYMBOLS		1	02/01/2009
903.01H	SPECIAL SIGNING CHARACTERS		1	07/01/2004
903.02AL	HIGHWAY SIGNING STRUCTURE SIGNS	*	19	02/01/2012
903.03BH	SIGN MOUNTING DETAILS	*	11	02/01/2012
903.04F	HIGHWAY SIGNING - WEIGH STATION	*	1	02/01/2012
903.05H	HIGHWAY SIGNING - TUBULAR SUPPORT STEEL - TYPE S, ONE TUBE		2	04/01/2005
903.06H	HIGHWAY SIGNING - TUBULAR SUPPORT STEEL - TYPE S, TWO TUBE		2	04/01/2005
903.07H	HIGHWAY SIGNING - TUBULAR SUPPORT STEEL - TYPE C		2	04/01/2005
903.08G	HIGHWAY SIGNING - TUBULAR SUPPORT STEEL - TYPE B		2	04/01/2005
903.10BB	OVERHEAD SIGN TRUSSES - ALUMINUM	*	6	10/01/2011
903.12Y	OVERHEAD SIGN TRUSSES-BUTTERFLY AND CANTILEVER-STRUCTURAL STEEL	*	7	12/01/2008
903.60AA	OVERHEAD SIGN TRUSSES-STRUCTURAL STEEL	*	5	10/01/2011

* REVISED OR ADDED SINCE OCTOBER 2009

IF A SEAL IS PRESENT ON THIS SHEET IT HAS BEEN ELECTRONICALLY SEALED AND DATED.

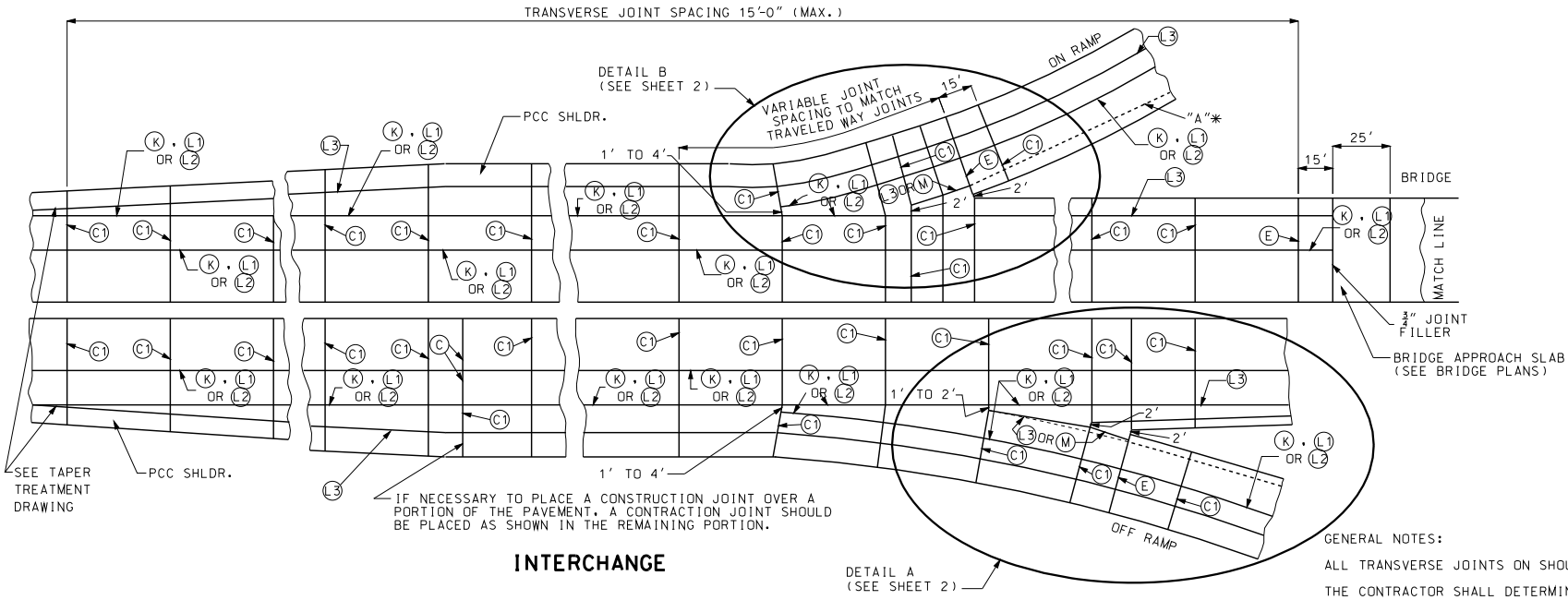

INTERCHANGE

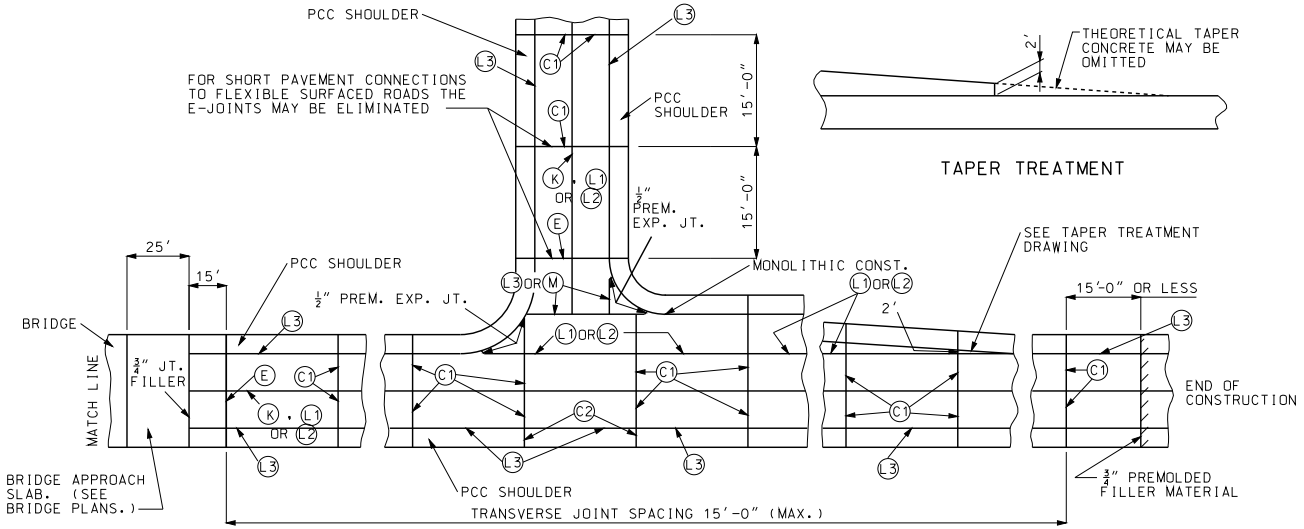

NON-INTERCHANGE

GENERAL NOTES:

ALL TRANSVERSE JOINTS ON SHOULDERS SHALL BE (C2).

THE CONTRACTOR SHALL DETERMINE THE PAVING WIDTH.

(L3) SHALL BE USED BETWEEN PAVEMENT AND SHOULDER GREATER THAN 4'. THE INTERCHANGE WILL EXTEND FROM THE BEGINNING OF THE ACCELERATION/DECELERATION LANE TO THE GORE RETURN TAPER ON THE MAINLINE. THE INTERCHANGE WILL ALSO INCLUDE THE RAMPS UP TO THE BEGINNING OF THE RADIUS WITH THE ROAD INTERSECTING THE RAMP.

FOR JOINT DETAILS, SEE SHEETS NO. 3 & 4.

THE JOINT LAYOUT OF RAMPS IS TYPICAL FOR OUTER RAMPS OF CLOVERLEAF AND DIAMOND INTERCHANGES. SEE OTHER DRAWINGS FOR SPECIAL JOINT LAYOUTS.

JOINT SPACING SHOWN IS MAXIMUM AND IS TO BE REDUCED TO AVOID CONFLICT WITH ABUTTING STRUCTURES. JOINTS IN MULTI-LANE PAVEMENT ARE TO BE CONTINUOUS.

ALL SHOULDERS 4' OR LESS IN WIDTH CAST MONOLITHICALLY WITH THE ADJACENT LANE AND SHALL NOT HAVE A LONGITUDINAL JOINT OR TIE BARS.

MISSOURI HIGHWAYS AND TRANSPORTATION COMMISSION
105 WEST CAPITOL
JEFFERSON CITY, MO 65102
1-888-ASK-MODOT (1-888-275-6636)

STATE OF MISSOURI
KATHRYN PHILLIPS HARVEY
NUMBER PE-23751
PROFESSIONAL ENGINEER
THIS SHEET HAS BEEN SIGNED, SEALED AND DATED ELECTRONICALLY.

CONCRETE PAVEMENT AND BASE APPURTENANCES FOR 15' JOINT SPACING

DATE EFFECTIVE: 06/01/2010
DATE PREPARED: 4/1/2013

502.05M

SHEET NO. 1 OF 4

IF A SEAL IS PRESENT ON THIS SHEET IT HAS BEEN ELECTRONICALLY SEALED AND DATED.

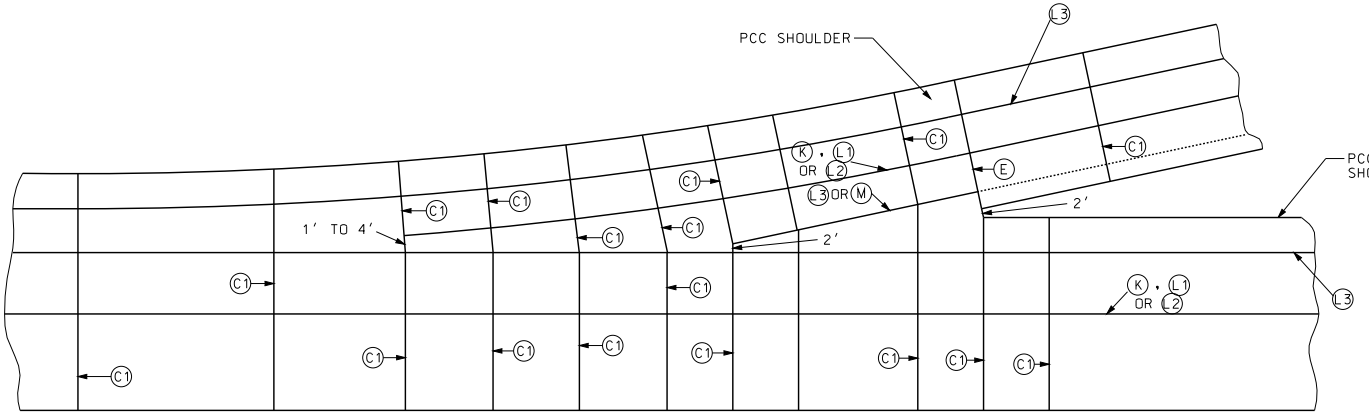

DETAIL B
(FROM SHEET 1 OF 4)

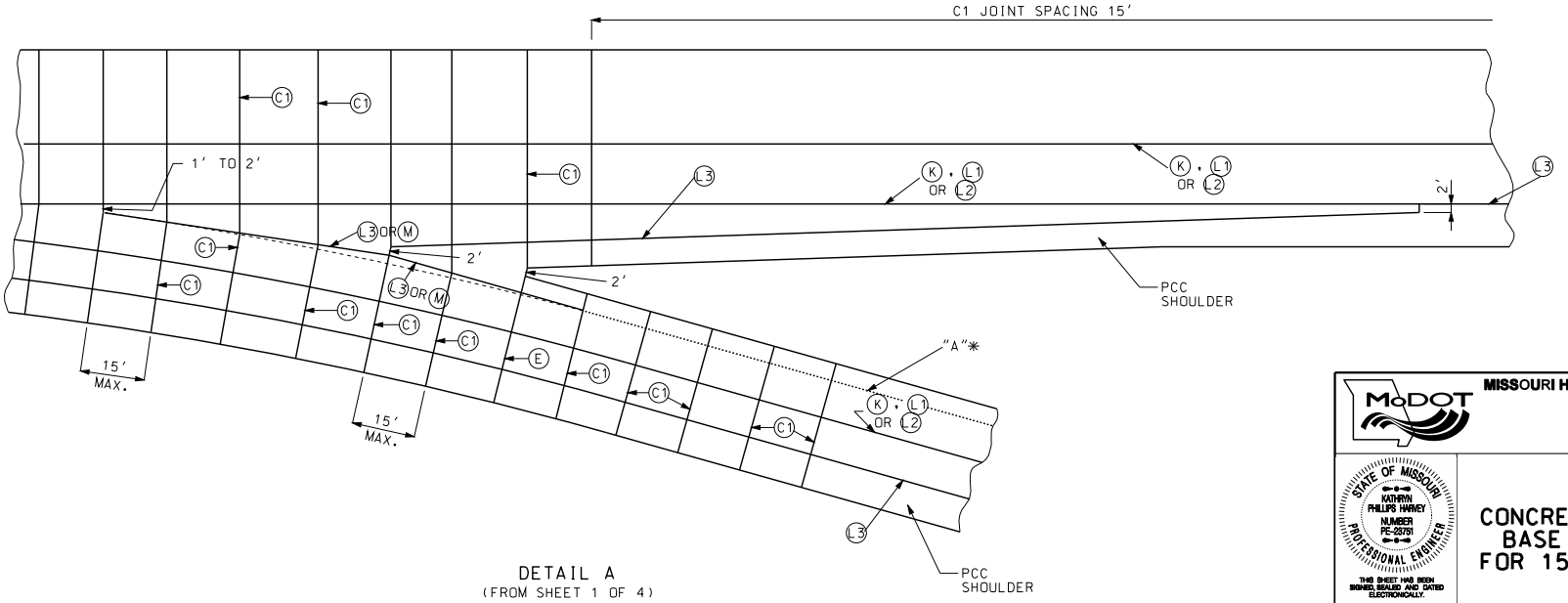

DETAIL A
(FROM SHEET 1 OF 4)

MISSOURI HIGHWAYS AND TRANSPORTATION COMMISSION
105 WEST CAPITOL
JEFFERSON CITY, MO 65102
1-888-ASK-MODOT (1-888-275-6636)

STATE OF MISSOURI
KATHRYN PHILLIPS HARVEY
NUMBER PE-23751
PROFESSIONAL ENGINEER
THIS SHEET HAS BEEN SIGNED, SEALED AND DATED ELECTRONICALLY.

CONCRETE PAVEMENT AND BASE APPURTENANCES FOR 15' JOINT SPACING

DATE EFFECTIVE: 06/01/2010
DATE PREPARED: 4/1/2013

502.05M

SHEET NO. 2 OF 4

IF A SEAL IS PRESENT ON THIS SHEET IT HAS BEEN ELECTRONICALLY SEALED AND DATED.

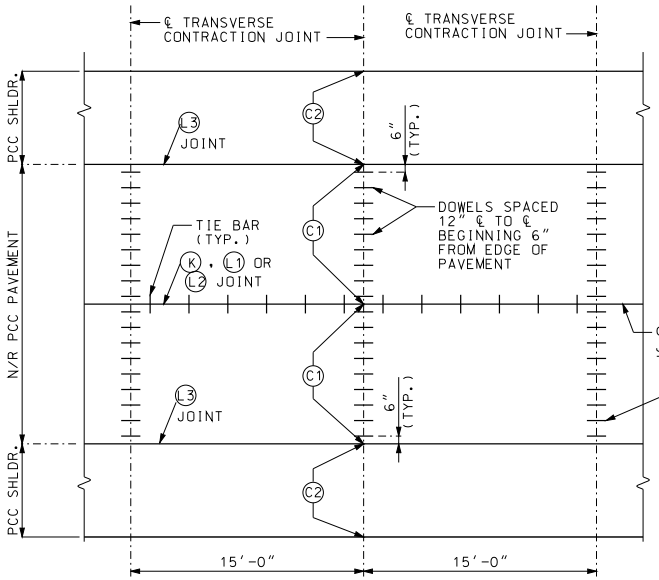

JOINT PLAN AND SPACING FOR CONTRACTION JOINTS (1)

(1) LONGITUDINAL JOINT NOT REQUIRED AT INSIDE SHOULDER ON DIVIDED HIGHWAYS OR AT INSIDE SHOULDER OF RAMPS. FOR 4' OR LESS INSIDE SHOULDERS, DOWELS ARE REQUIRED FOR THE FIRST TWO FEET ADJACENT TO THE TRAVEL LANE.

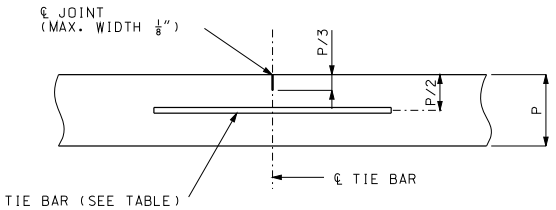

TIE BARS REQUIRED.

LONGITUDINAL JOINT (L1)

TIE BAR AND DOWEL TABLE				
PCCP THICKNESS (P)	DOWEL SIZE	TIE BAR SIZE	DOWEL SPACING	TIE BAR SPACING
LESS THAN 7"	NONE	#5X30"	NONE	30" CTR.-CTR.
7" TO 10"	1¼"X18"	#5X30"	12" CTR.-CTR.	30" CTR.-CTR.
GREATER THAN 10"	1½"X18"	#6X40"	12" CTR.-CTR.	30" CTR.-CTR.

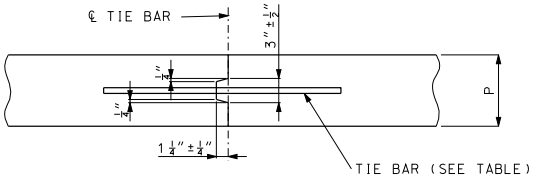

IF METAL IS USED TO FORM KEY DISCONTINUE STRIP FOR DISTANCE OF APPROXIMATELY 3" EACH SIDE OF TRANSVERSE JOINT.

TYPE (K) REQUIRES TIE BAR.

TYPE (M) CONSTRUCTED WITHOUT TIE BARS.

(K) AND (M) JOINTS SHALL NOT BE SAWED.

TONGUE AND GROOVE JOINTS (K) AND (M)

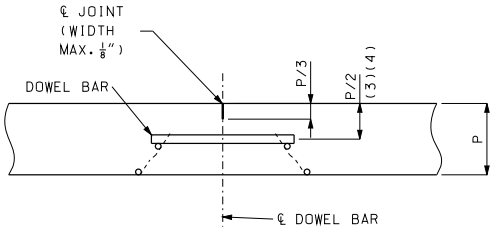

DOWELS REQUIRED. FOR PERMISSIBLE TYPES OF DOWELS SUPPORTING UNITS, SEE OTHER DRAWINGS.

TRANSVERSE CONTRACTION JOINTS FOR CONCRETE PAVEMENT OR BASE WIDENING SHALL MATCH EXISTING JOINTS.

TRANSVERSE CONTRACTION JOINT (C1) (2)

(2) DOWEL BARS ARE REQUIRED FOR ALL PAVEMENTS HAVING THE SAME THICKNESS AS THE TRAVELED WAY.
(3) FOR PAVEMENTS HAVING THICKNESS IN 1/2" INCREMENTS, DOWEL BASKETS SHALL BE P/2- 1/2".
(4) DOWEL BARS MAY BE PLACED BY MECHANICAL MEANS AT THE OPTION OF THE CONTRACTOR.

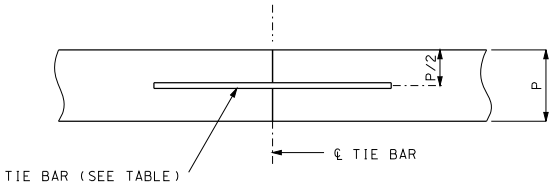

TIE BARS REQUIRED.

LONGITUDINAL CONSTRUCTION JOINT (L2)

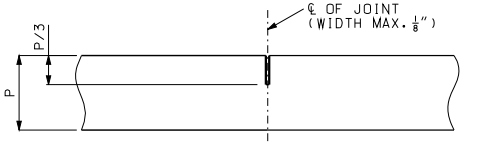

TRANSVERSE CONTRACTION JOINT (C2)

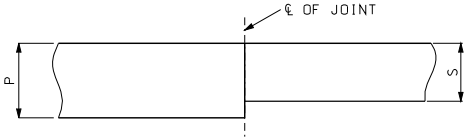

LONGITUDINAL CONSTRUCTION JOINT FOR SHOULDER (L3)

S = SHOULDER THICKNESS

GENERAL NOTES:

THE FINAL POSITION OF ALL DOWELS AND TIE BARS SHALL BE PERPENDICULAR TO THE PLANE OF THE JOINT AND PARALLEL TO THE SURFACE OF THE PAVEMENT AND PARALLEL TO EACH OTHER.

(L3) JOINT FOR FULL DEPTH OR PARTIAL DEPTH SHOULDERS.

MISSOURI HIGHWAYS AND TRANSPORTATION COMMISSION
105 WEST CAPITOL
JEFFERSON CITY, MO 65102
1-888-ASK-MODOT (1-888-275-6636)

STATE OF MISSOURI KATHRYN PHILLIPS HARVEY NUMBER PE-23751 PROFESSIONAL ENGINEER
THIS SHEET HAS BEEN SIGNED, SEALED AND DATED ELECTRONICALLY.

CONCRETE PAVEMENT AND BASE APPURTENANCES FOR 15' JOINT SPACING

DATE EFFECTIVE: 06/01/2010
DATE PREPARED: 4/1/2010

502.05M

SHEET NO. 3 OF 4

IF A SEAL IS PRESENT ON THIS SHEET IT HAS BEEN ELECTRONICALLY SEALED AND DATED.

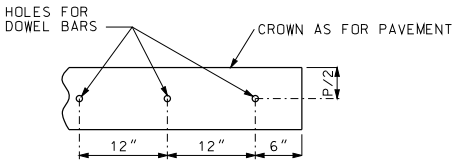

PART ELEVATION OF
HEADER PLANK

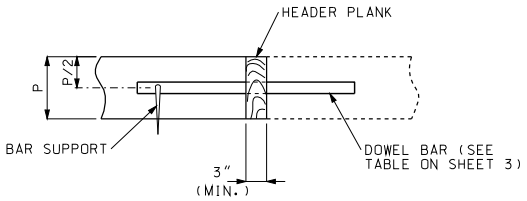

HEADER SECTION

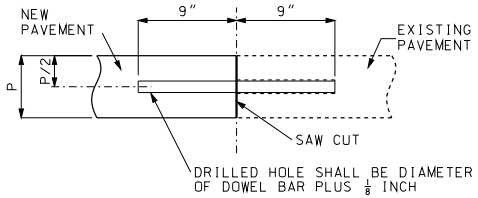

SAWED SECTION

THE HEADER BOARD SHALL BE SUFFICIENTLY RIGID TO PREVENT DISTORTION FROM THE TYPICAL SECTION AND MAINTAIN A STRAIGHT LINE FROM PAVEMENT EDGE TO PAVEMENT EDGE.

THE CONSTRUCTION JOINT MAY BE SAWED FULL DEPTH. HOLES FOR DOWEL BARS SHALL BE DRILLED AFTER THE CONCRETE HAS SUFFICIENT SET TO PREVENT DAMAGE. DOWEL BARS SHALL BE BONDED INTO THE HOLES.

BONDING FOR DOWEL BARS SHALL BE EPOXY OR POLYESTER BONDING AGENTS AS SPECIFIED IN SECTION 1039.

THE PORTION OF THE DOWEL OUTSIDE THE HOLE SHALL BE COATED WITH AN APPROVED LUBRICANT.

CONSTRUCTION JOINT (C)

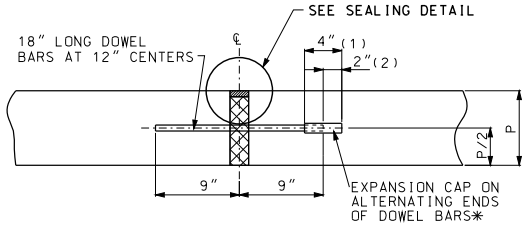

EXPANSION JOINTS (E)

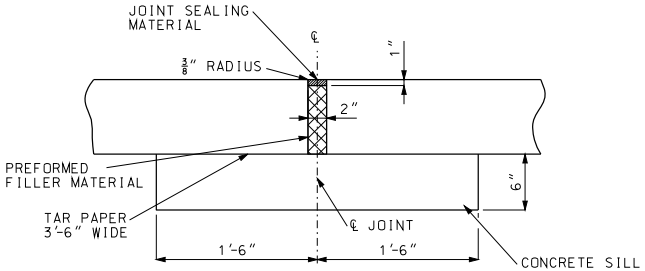

SILL SHALL EXTEND 18" BEYOND EACH EDGE OF THE PAVEMENT AND SHALL BE CONSTRUCTED OF CONCRETE REGARDLESS OF ADJACENT BASE MATERIAL.

ALTERNATE EXPANSION JOINTS (E)

(CONTRACTOR MAY SELECT EITHER EXPANSION JOINT (E))

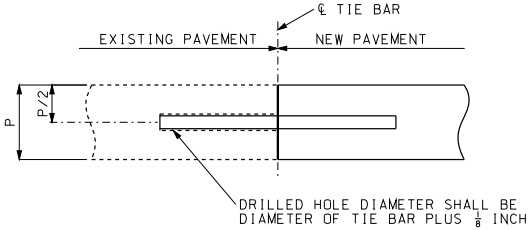

TIE BARS SHALL BE EPOXY COATED. DEFORMED REINFORCING BARS MEETING THE REQUIREMENTS OF SECTIONS 710 AND 1057.

BONDING FOR TIE BARS SHALL BE EPOXY OR POLYESTER BONDING AGENTS AS SPECIFIED IN SECTION 1039.

TIE BAR SIZE AND LENGTH SHALL BE BASED ON THE THICKNESS OF THE THINNER PAVEMENT OR SHOULDER TO BE TIED TOGETHER.

LONGITUDINAL CONSTRUCTION JOINT
(EXISTING PAVEMENT) (L)

(1) LENGTH OF CAP

(2) GAP BETWEEN END OF CAP AND DOWEL.

* FOR EXPANSION JOINTS FORMED USING A CONSTRUCTION HEADER, THE EXPANSION CAPS SHALL BE INSTALLED ON THE EXPOSED END OF EACH BAR ONCE THE HEADER HAS BEEN REMOVED AND THE JOINT FILLER MATERIAL HAS BEEN INSTALLED.

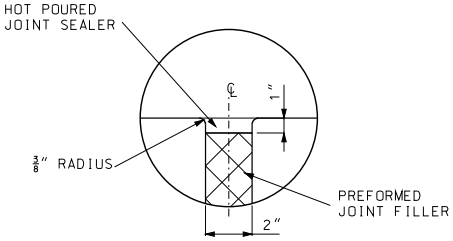

SEALING DETAIL

IF A SEAL IS PRESENT ON THIS SHEET IT HAS BEEN ELECTRONICALLY SEALED AND DATED.

MISSOURI HIGHWAYS AND TRANSPORTATION COMMISSION
105 WEST CAPITOL
JEFFERSON CITY, MO 65102
1-888-ASK-MODOT (1-888-275-6636)

STATE OF MISSOURI
KATHRYN PHILLIPS HARVEY
NUMBER PE-23751
PROFESSIONAL ENGINEER
THIS SHEET HAS BEEN SIGNED, SEALED AND DATED ELECTRONICALLY.

CONCRETE PAVEMENT AND BASE APPURTENANCES FOR 15' JOINT SPACING

DATE EFFECTIVE: 06/01/2010
DATE PREPARED: 4/1/2010

502.05M

SHEET NO. 4 OF 4

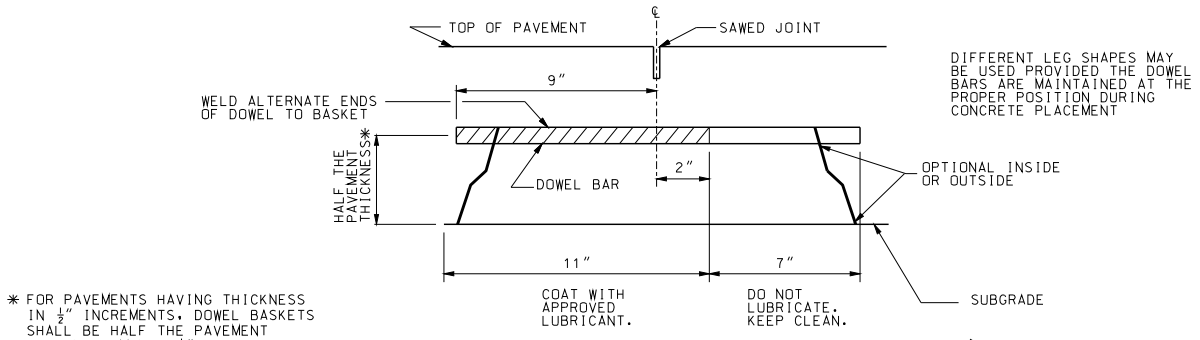

DIFFERENT LEG SHAPES MAY BE USED PROVIDED THE DOWEL BARS ARE MAINTAINED AT THE PROPER POSITION DURING CONCRETE PLACEMENT

DOWEL BARS		
PAVEMENT THICKNESS	BAR SIZE	
	DIAMETER	LENGTH
10″ AND LESS	1 1/4″	18″
GREATER THAN 10″	1 1/2″	18″

* FOR PAVEMENTS HAVING THICKNESS IN 1/2″ INCREMENTS, DOWEL BASKETS SHALL BE HALF THE PAVEMENT THICKNESS MINUS 1/2″.

SECTION A-A

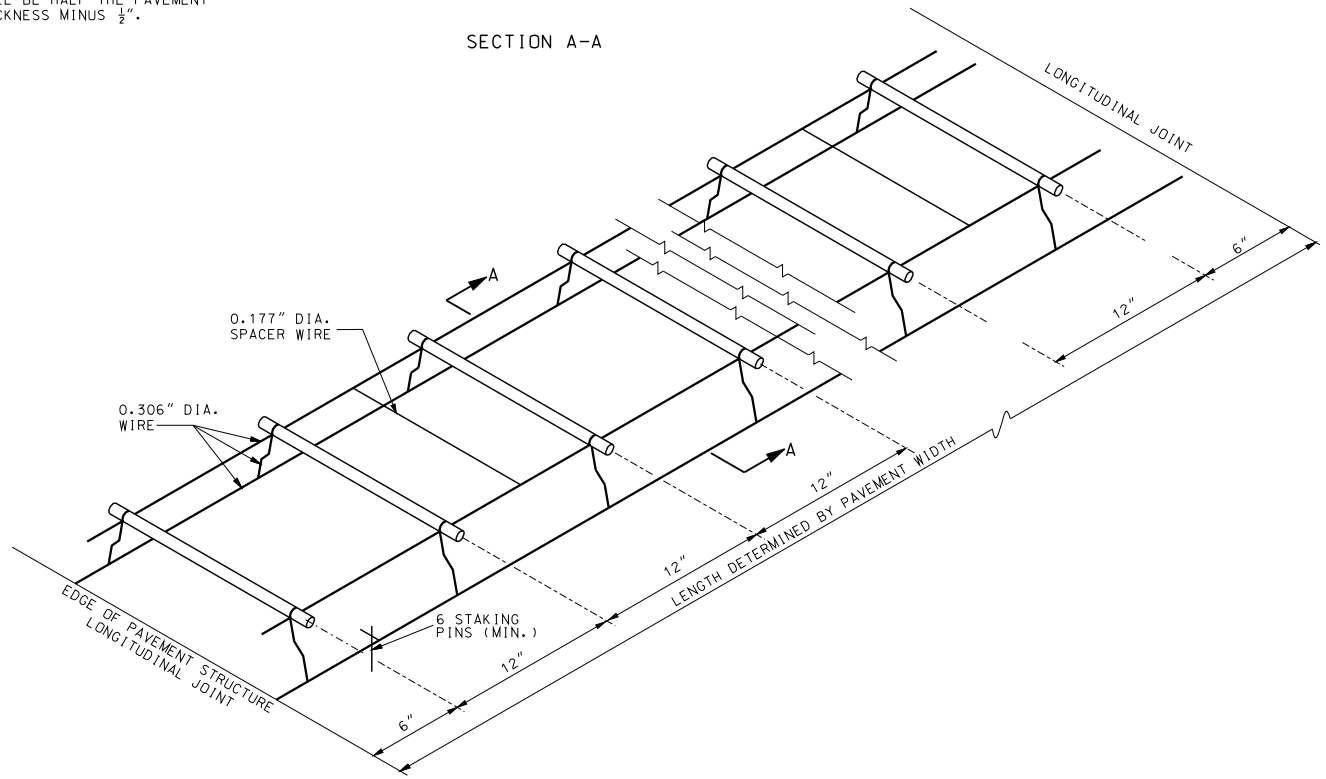

GENERAL NOTES:

THE DOWEL SUPPORTING UNITS SHALL BE FACTORY ASSEMBLED AND CAPABLE OF HOLDING THE DOWELS IN THEIR REQUIRED POSITIONS. IN THE COMPLETED JOINT INSTALLATION, DOWELS SHALL BE POSITIONED WITHIN 1/2″ OF THE VERTICAL AND HORIZONTAL PLANE AND IN THE LONGITUDINAL DIRECTION. THE SKEW TOLERANCE SHALL BE 1/4″.

THE FREE END OF EACH EPOXY COATED DOWEL SHALL BE MARKED WITH A SPOT OF PAINT AT LEAST ONE INCH IN DIAMETER AND CONTRASTING IN COLOR WITH THE EPOXY COATING.

WIRE SIZES SHOWN ARE MINIMUM REQUIRED.

WIRES, BARS OR CLIPS SHALL BE USED AS NECESSARY TO STRENGTHEN THE ASSEMBLIES.

THE DIAMETER OF THE SPACER WIRE SHALL NOT EXCEED 0.200″.

SPACER WIRE MAY BE CUT OR LEFT INTACT.

STAKING PINS SHALL BE FABRICATED FROM 0.306″ DIAMENTER WIRE MINIMUM WITH A SUITABLE HOOK. STAKING PINS SHALL HAVE A MINIMUM LENGTH OF 12″ FOR DOWEL ASSEMBLIES UNLESS OTHERWISE DIRECTED BY THE ENGINEER.

MINOR VARIATIONS IN THE CONFIGURATION OF THE SUPPORT UNITS WILL BE ALLOWED.

MISSOURI HIGHWAYS AND TRANSPORTATION COMMISSION
105 WEST CAPITOL
JEFFERSON CITY, MO 65102
1-888-ASK-MODOT (1-888-275-6636)

STATE OF MISSOURI
KATHRYN PHILLIPS HARVEY
NUMBER PE-23751
PROFESSIONAL ENGINEER
THIS SHEET HAS BEEN SIGNED, SEALED AND DATED ELECTRONICALLY.

DOWEL SUPPORTING UNITS

APPROVED FOR USE
WITH TRANSVERSE JOINTS

DATE EFFECTIVE: 06/01/2010
DATE PREPARED: 4/1/2010

502.10K

SHEET NO. 1 OF 2

IF A SEAL IS PRESENT ON THIS SHEET IT HAS BEEN ELECTRONICALLY SEALED AND DATED.

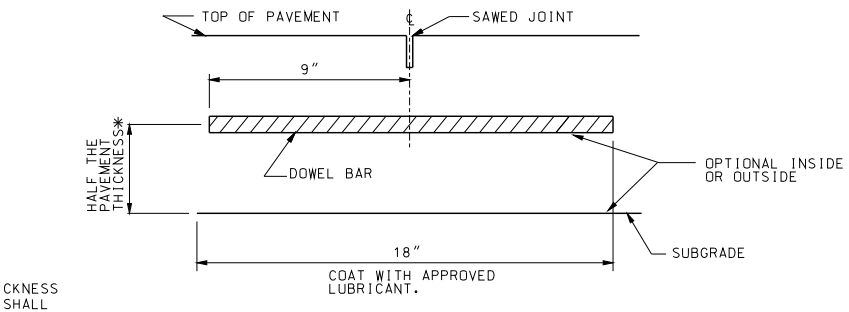

SECTION C-C

* FOR PAVEMENTS HAVING THICKNESS IN ½" INCREMENTS, DOWEL SHALL BE PLACED HALF THE PAVEMENT THICKNESS MINUS ½".

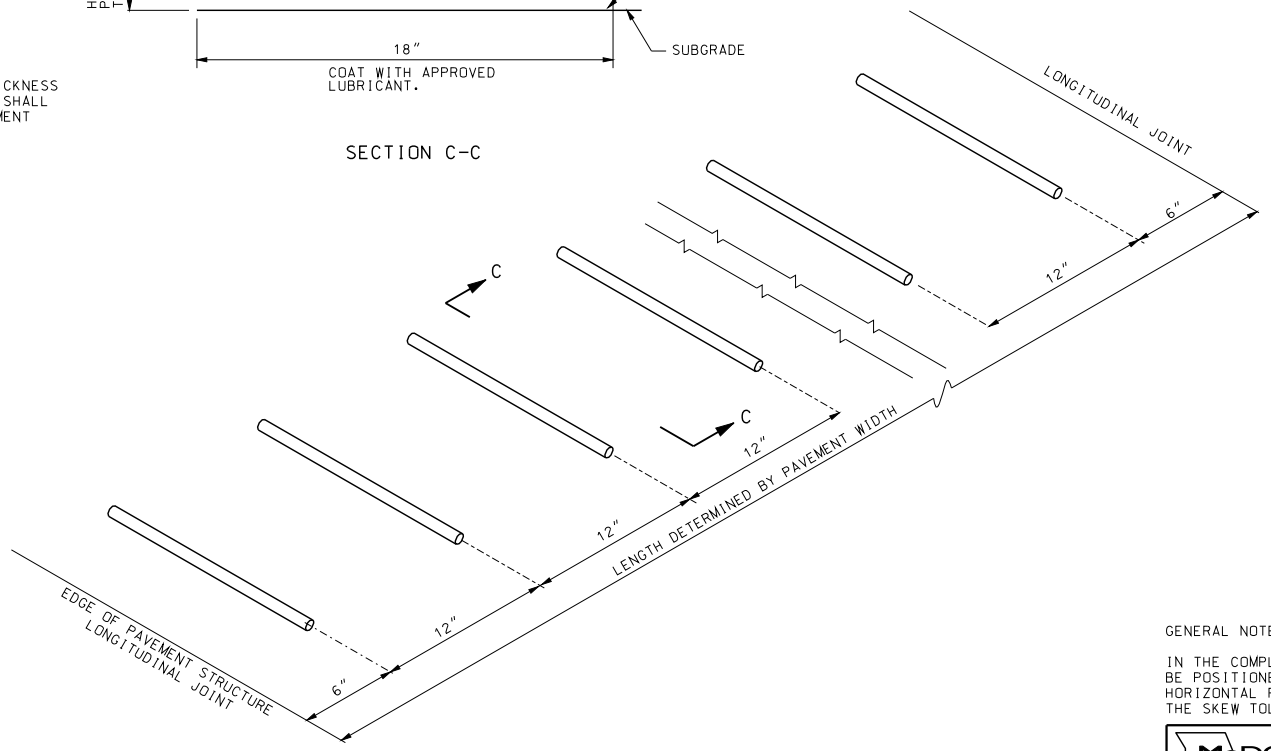

GENERAL NOTES:

IN THE COMPLETED JOINT INSTALLATION, DOWELS SHALL BE POSITIONED WITHIN 1/2" OF THE VERTICAL AND HORIZONTAL PLANE AND IN THE LONGITUDINAL DIRECTION. THE SKEW TOLERANCE SHALL BE 1/4".

MISSOURI HIGHWAYS AND TRANSPORTATION COMMISSION
105 WEST CAPITOL
JEFFERSON CITY, MO 65102
1-888-ASK-MODOT (1-888-275-6636)

STATE OF MISSOURI
KATHRYN PHILLIPS HARVEY
NUMBER PE-23751
PROFESSIONAL ENGINEER
THIS SHEET HAS BEEN SIGNED, SEALED AND DATED ELECTRONICALLY.

DOWEL SUPPORTING UNITS

MECHANICAL PLACEMENT

DATE EFFECTIVE: 06/01/2010
DATE PREPARED: 4/1/2010

502.10K

SHEET NO. 2 OF 2

IF A SEAL IS PRESENT ON THIS SHEET IT HAS BEEN ELECTRONICALLY SEALED AND DATED.

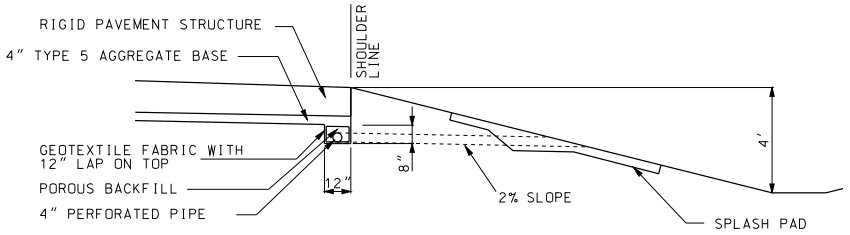

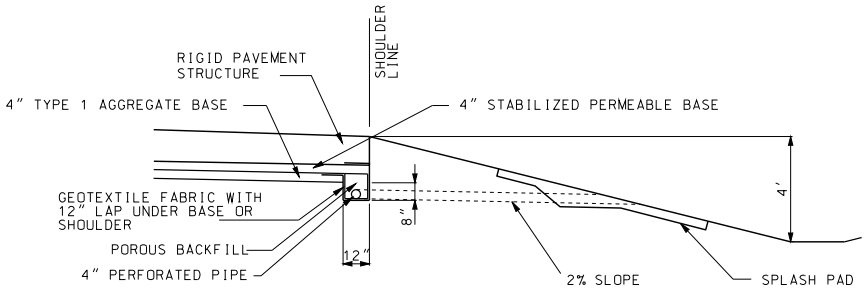

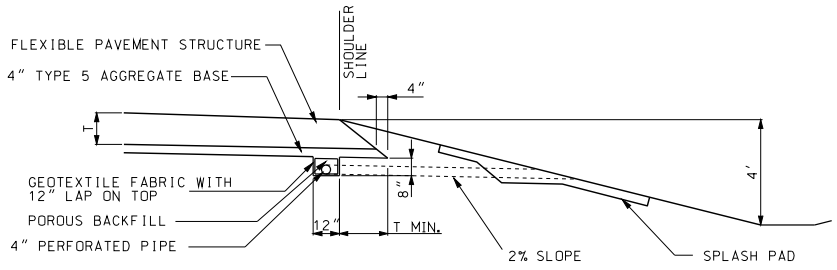

MEDIUM DUTY

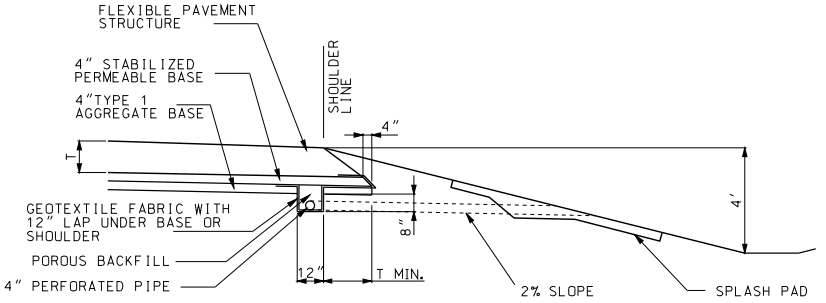

HEAVY DUTY

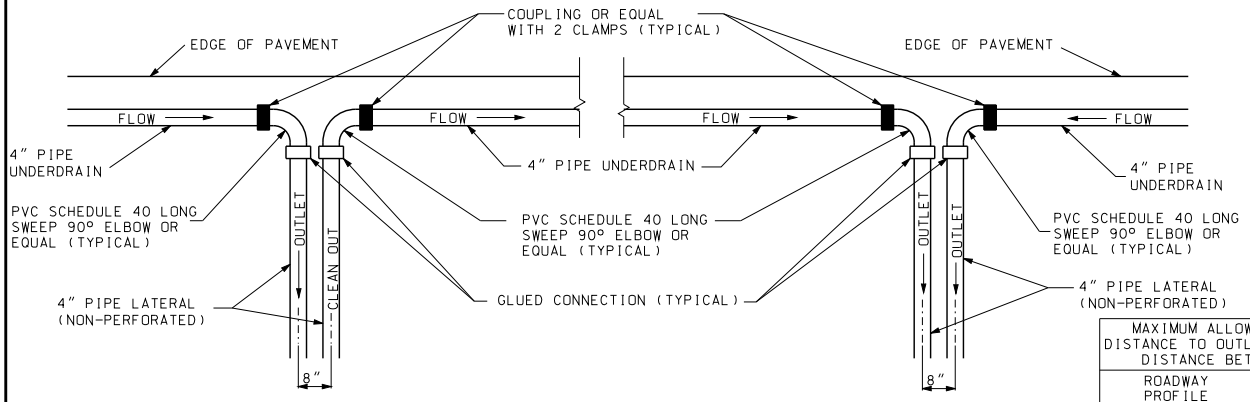

ON GRADIENT AT SAGS

DETAIL OF PIPE AGGREGATE DRAIN OUTLETS

MAXIMUM ALLOWABLE DRAINAGE DISTANCE TO OUTLET OR SEPARATION DISTANCE BETWEEN OUTLETS	
ROADWAY PROFILE GRADIENT (%)	DISTANCE
≤ 1	250 FT.
> 1 AND ≤ 2	375 FT.
> 2	500 FT.

GENERAL NOTES:

ON SUPERELEVATED CURVES PLACE LONGITUDINAL UNDERDRAIN ON LOW SIDE ONLY.

CONSTRUCT OUTLETS AT LOW POINT OF SAG CURVE.

MISSOURI HIGHWAYS AND TRANSPORTATION COMMISSION
105 WEST CAPITOL
JEFFERSON CITY, MO 65102
1-888-ASK-MODOT (1-888-275-6636)

STATE OF MISSOURI
KATHRYN PHILLIPS HARVEY
NUMBER PE-23751
PROFESSIONAL ENGINEER
THIS SHEET HAS BEEN SIGNED, SEALED AND DATED ELECTRONICALLY.

PAVEMENT UNDERDRAINAGE

PIPE AGGREGATE PAVEMENT EDGE DRAINS FOR FULL DEPTH SHOULDERS

DATE EFFECTIVE: 06/01/2013
DATE PREPARED: 4/1/2013

605.101

SHEET NO. 1 OF 4

IF A SEAL IS PRESENT ON THIS SHEET IT HAS BEEN ELECTRONICALLY SEALED AND DATED.

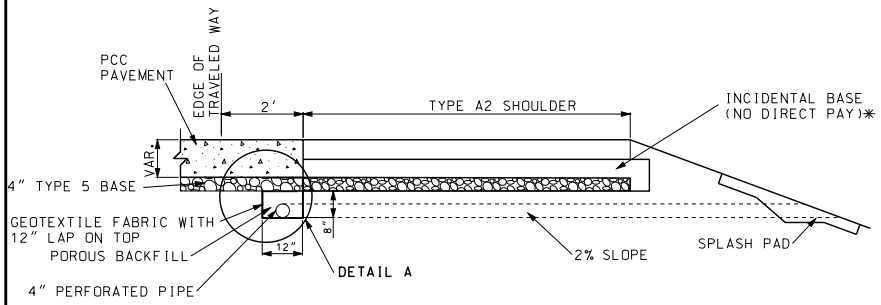

RIGID PAVEMENT WITH TYPE 5 BASE

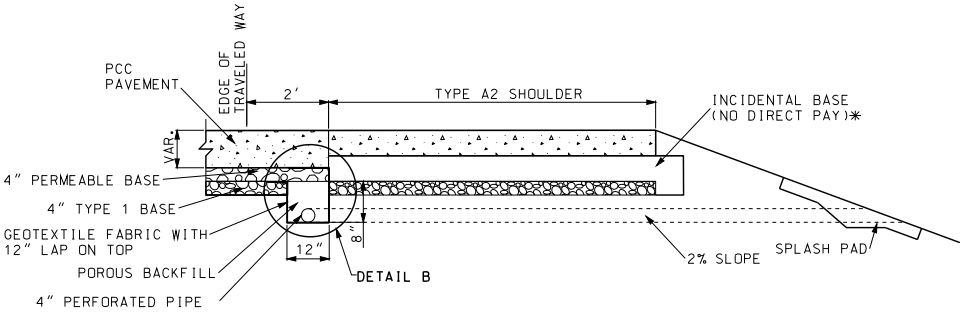

RIGID PAVEMENT WITH PERMEABLE BASE

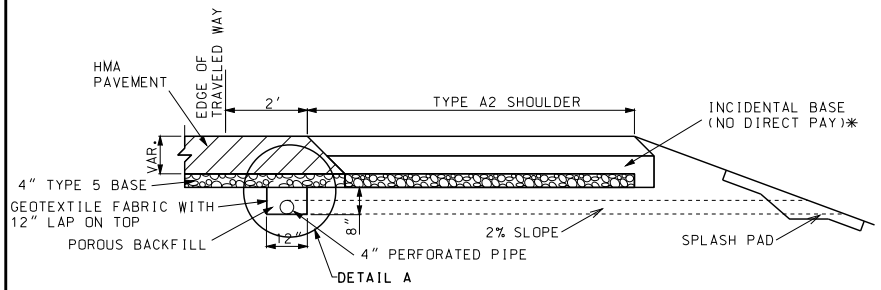

FLEXIBLE PAVEMENT WITH TYPE 5 BASE

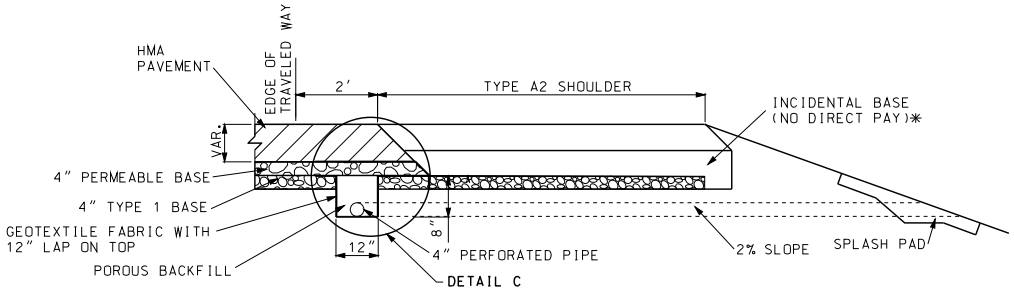

FLEXIBLE PAVEMENT WITH PERMEABLE BASE

PCC (PORTLAND CEMENT CONCRETE)

HMA (HOT MIX ASPHALT)

BASE

* BASE MATERIAL (ASPHALT MILLINGS, RECYCLED CONCRETE, TYPE 1 BASE, ETC.) APPROVED BY THE ENGINEER.

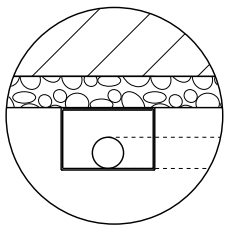

DETAIL A

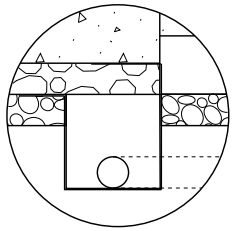

DETAIL B

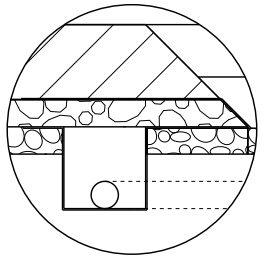

DETAIL C

GENERAL NOTES:

SEE DETAIL OF PIPE AGGREGATE DRAIN OUTLETS ON SHEET 1.

MISSOURI HIGHWAYS AND TRANSPORTATION COMMISSION
105 WEST CAPITOL
JEFFERSON CITY, MO 65102
1-888-ASK-MODOT (1-888-275-6636)

STATE OF MISSOURI
KATHRYN PHILLIPS HARVEY
NUMBER PE-2007051
PROFESSIONAL ENGINEER
THIS SHEET HAS BEEN SIGNED, SEALED AND DATED ELECTRONICALLY.

PAVEMENT UNDERDRAINAGE

PIPE AGGREGATE PAVEMENT EDGE DRAINS FOR TYPE A2 SHOULDERS

DATE EFFECTIVE: 06/01/2013
DATE PREPARED: 4/1/2013

605.101

SHEET NO. 2 OF 4

IF A SEAL IS PRESENT ON THIS SHEET IT HAS BEEN ELECTRONICALLY SEALED AND DATED.

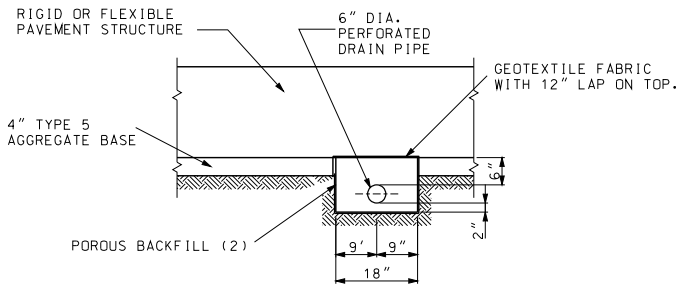

SECTION D-D
WITHOUT PERMEABLE BASE

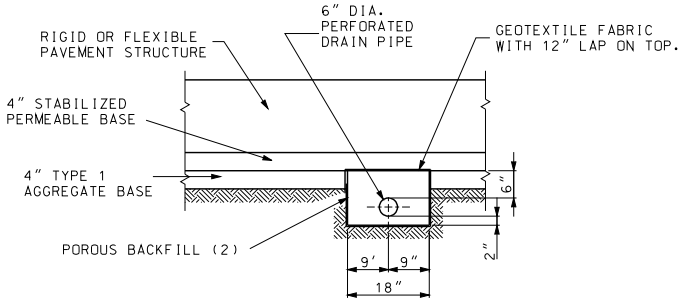

SECTION D-D
WITH PERMEABLE BASE

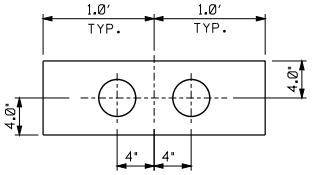

SECTION A-A

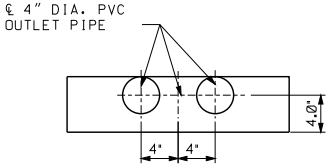

SECTION B-B

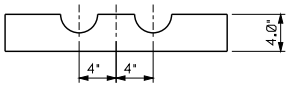

SECTION C-C

ITEM	2:1	3:1	4:1	6:1
A	5.48'	6.19'	6.95'	8.58'
B	2.70'	3.07'	3.46'	4.28'
C	0.78'	1.12'	1.49'	2.30'
D	2.00'	2.00'	2.00'	2.00'
E	2.00'	2.00'	2.00'	2.00'
F	0.46'	0.61'	0.78'	1.18'
G	0.71'	1.07'	1.46'	2.27'
H	2.31'	2.51'	2.71'	3.13'
CONC.	0.15 C.Y.	0.17 C.Y.	0.20 C.Y.	0.25 C.Y.

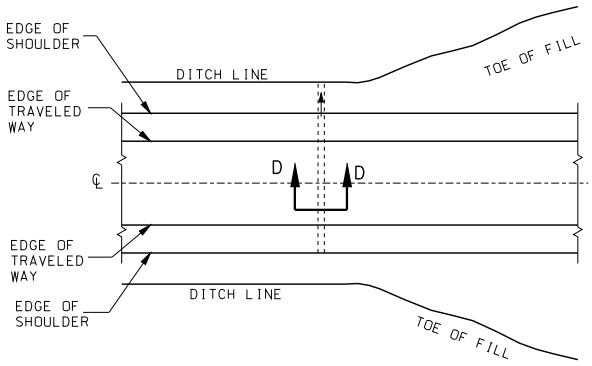

CROSS DRAIN

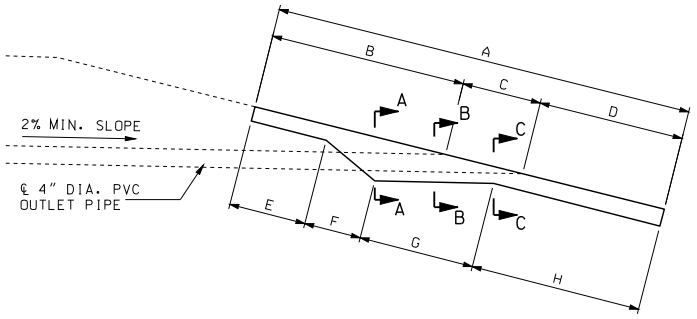

CONCRETE SPLASH PADS

GENERAL NOTES:

PRECAST CONCRETE SPLASH PADS MAY BE INSTALLED AS APPROVED BY THE ENGINEER.

TOP OF SPLASH PAD SHALL MATCH EXISTING CROSS SLOPE. CONSTRUCT BEND IN SPLASH PAD WHERE CROSS SLOPE CHANGES.

DIMENSIONS ARE APPROXIMATE AND CAN BE ADJUSTED AS DIRECTED BY THE ENGINEER.

MISSOURI HIGHWAYS AND TRANSPORTATION COMMISSION
105 WEST CAPITOL
JEFFERSON CITY, MO 65102
1-888-ASK-MODOT (1-888-275-6636)

STATE OF MISSOURI
KATHRYN PHILLIPS HARVEY
NUMBER PE-23751
PROFESSIONAL ENGINEER
THIS SHEET HAS BEEN SIGNED, SEALED AND DATED ELECTRONICALLY.

PAVEMENT UNDERDRAINAGE
CROSS DRAINS

DATE EFFECTIVE: 06/01/2013
DATE PREPARED: 4/1/2013

605.101

SHEET NO. 3 OF 4

IF A SEAL IS PRESENT ON THIS SHEET IT HAS BEEN ELECTRONICALLY SEALED AND DATED.

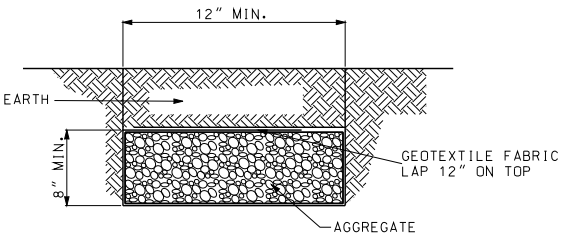

SECTION A-A

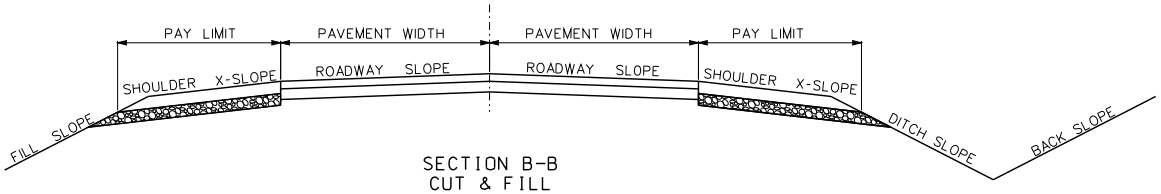

SECTION B-B
CUT & FILL
ELEVATION

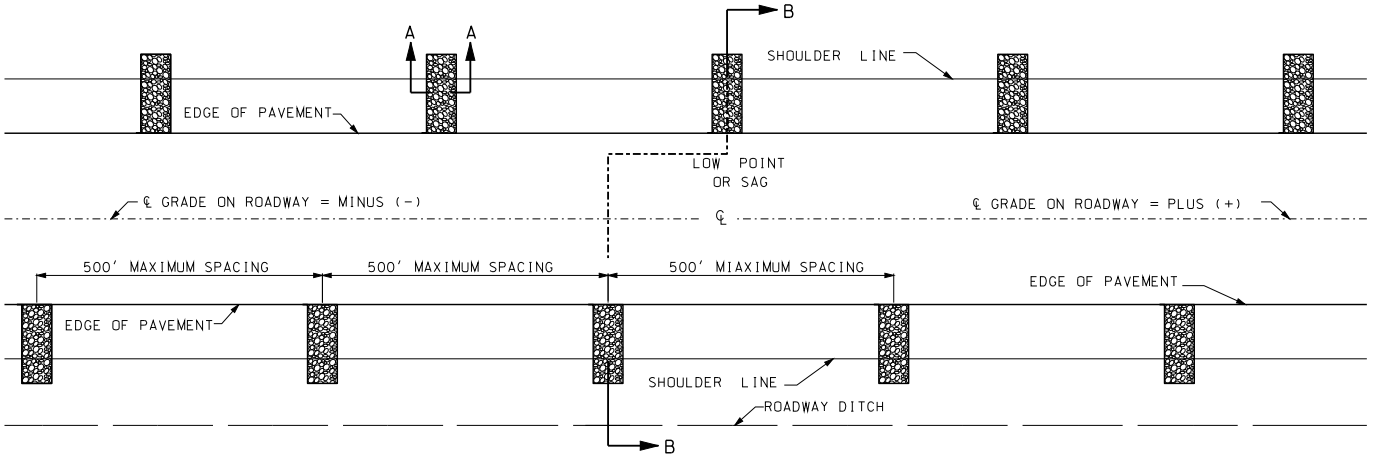

PLAN

GENERAL NOTES:

AGGREGATE UNDERDRAIN TO BE USED ONLY WHERE DESIGNATED ON PLANS.

AGGREGATE UNDERDRAIN SHALL BE PLACED AT THE LOW POINT OF THE SAG AND THE SPACING OF AGGREGATE UNDERDRAIN SHALL BE APPROX. 500'. AGGREGATE UNDERDRAINS WILL BE OMITTED ON THE CREST VERTICAL CURVES AND ON THE HIGH SIDE OF SUPERELEVATION. THE LOW SIDE OF SUPER-ELEVATION SPACING MAY BE DECREASED AS DIRECTED BY ENGINEER.

THE BOTTOM OF THE AGGREGATE DRAINS SHALL BE AT OR BELOW THE BOTTOM OF THE PAVEMENT'S AGGREGATE SUBBASE AT THE POINT OF CONTACT. THE TOP OF THE AGGREGATE DRAINS SHALL BE NO HIGHER THAN THE BOTTOM OF THE SHOULDER'S AGGREGATE BASE.

MISSOURI HIGHWAYS AND TRANSPORTATION COMMISSION
105 WEST CAPITOL
JEFFERSON CITY, MO 65102
1-888-ASK-MODOT (1-888-275-6636)

STATE OF MISSOURI
KATHRYN PHILLIPS HARVEY
NUMBER PE-23751
PROFESSIONAL ENGINEER
THIS SHEET HAS BEEN SIGNED, SEALED AND DATED ELECTRONICALLY.

PAVEMENT UNDERDRAINAGE
AGGREGATE UNDERDRAINS

DATE EFFECTIVE: 06/01/2013
DATE PREPARED: 4/1/2013

605.101

SHEET NO. 4 OF 4

IF A SEAL IS PRESENT ON THIS SHEET IT HAS BEEN ELECTRONICALLY SEALED AND DATED.

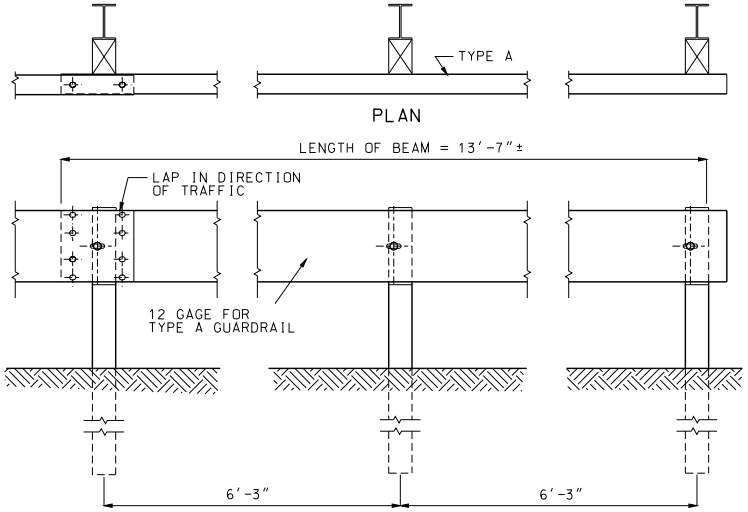

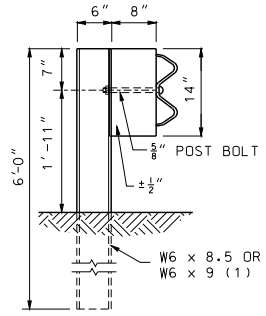

STEEL POST & WOOD BLOCK

TYPE A GUARDRAIL

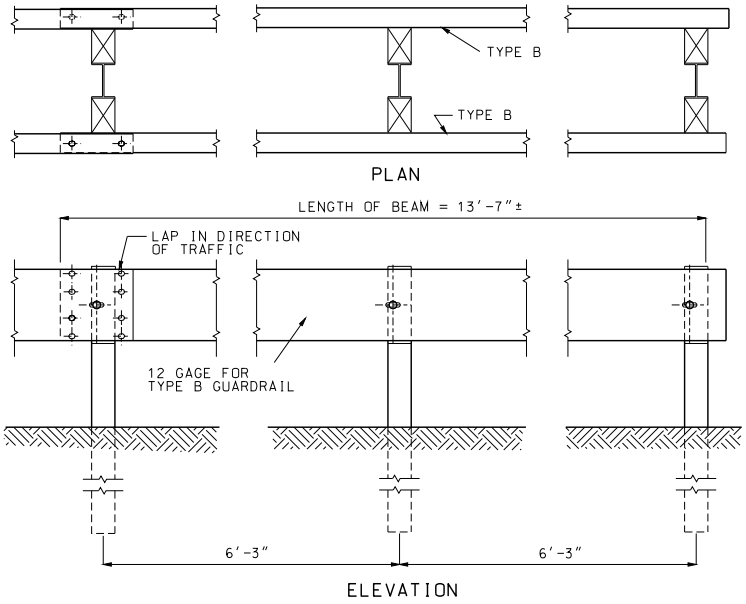

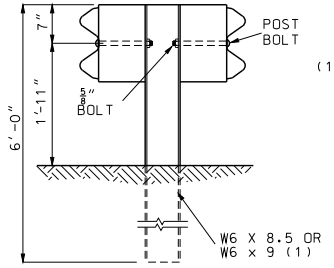

STEEL POST & WOOD BLOCK

TYPE B GUARDRAIL

(1) THE CONTRACTOR MAY FURNISH EQUIVALENT SECTIONS FABRICATED FROM MATERIAL MEETING AND IN ACCORDANCE WITH SECTION 1040.

MISSOURI HIGHWAYS AND TRANSPORTATION COMMISSION
105 WEST CAPITOL
JEFFERSON CITY, MO 65102
1-888-ASK-MODOT (1-888-275-6636)

STATE OF MISSOURI
KATHRYN PHILLIPS HARVEY
NUMBER PE-2007051
PROFESSIONAL ENGINEER
THIS SHEET HAS BEEN SIGNED, SEALED AND DATED ELECTRONICALLY.

GUARDRAIL

TYPE A AND TYPE B

DATE EFFECTIVE: 08/01/2012
DATE PREPARED: 7/19/2012

606.00AT

SHEET NO. 1 OF 8

IF A SEAL IS PRESENT ON THIS SHEET IT HAS BEEN ELECTRONICALLY SEALED AND DATED.

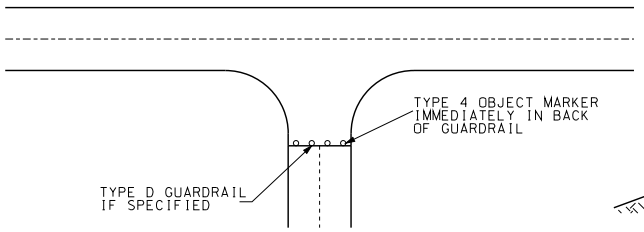

TYPICAL ROAD CLOSURE

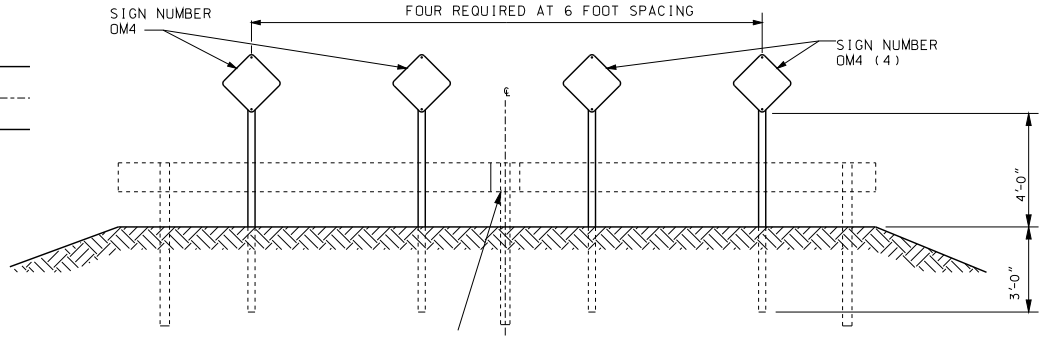

MOUNTING DETAILS
(END OF ROAD OR STREET)

TYPE 4 OBJECT MARKER SIGN OM4

(4) RED REFLECTIVE SHEETING IN ACCORDANCE WITH SEC 104.2.7.3 ON 0.080 SHEET ALUMINUM.

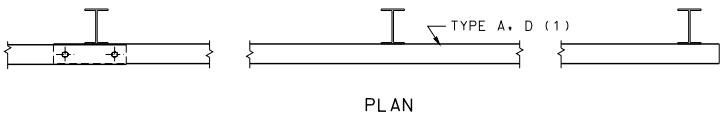

PLAN

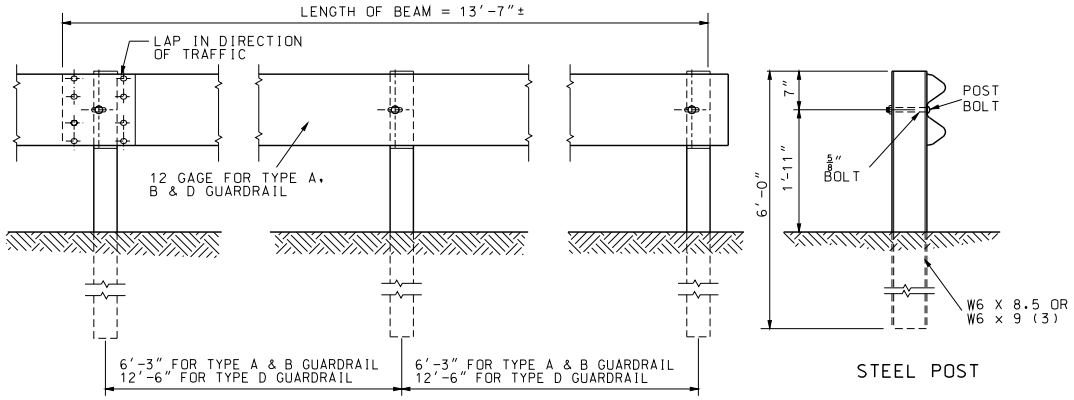

ELEVATION

STEEL POST

TYPE D GUARDRAIL

GENERAL NOTES:

TYPE D GUARDRAIL IS ACCESS RESTRAINT AND VISUAL TARGET VALUE ONLY. IT HAS NO REDIRECTIVE CAPABILITY.

MISSOURI HIGHWAYS AND TRANSPORTATION COMMISSION
105 WEST CAPITOL
JEFFERSON CITY, MO 65102
1-888-ASK-MODOT (1-888-275-6636)

STATE OF MISSOURI
KATHRYN PHILLIPS HARVEY
NUMBER PE-23751
PROFESSIONAL ENGINEER
THIS SHEET HAS BEEN SIGNED, SEALED AND DATED ELECTRONICALLY.

GUARDRAIL
TYPE D

DATE EFFECTIVE: 08/01/2012
DATE PREPARED: 7/19/2012

606.00AT

SHEET NO.
2 OF 8

IF A SEAL IS PRESENT ON THIS SHEET IT HAS BEEN ELECTRONICALLY SEALED AND DATED.

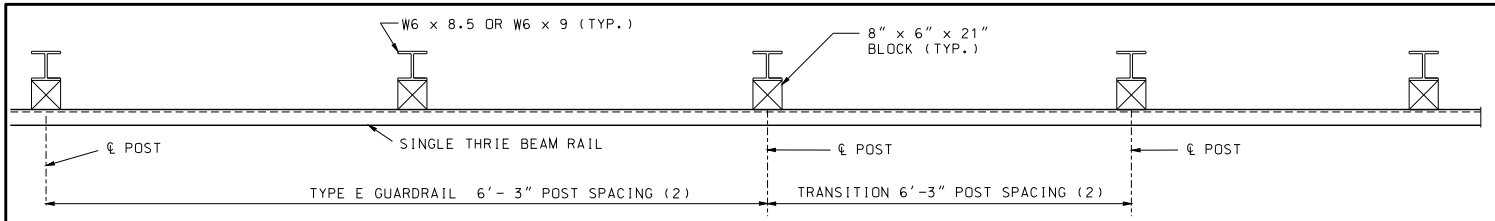

PLAN

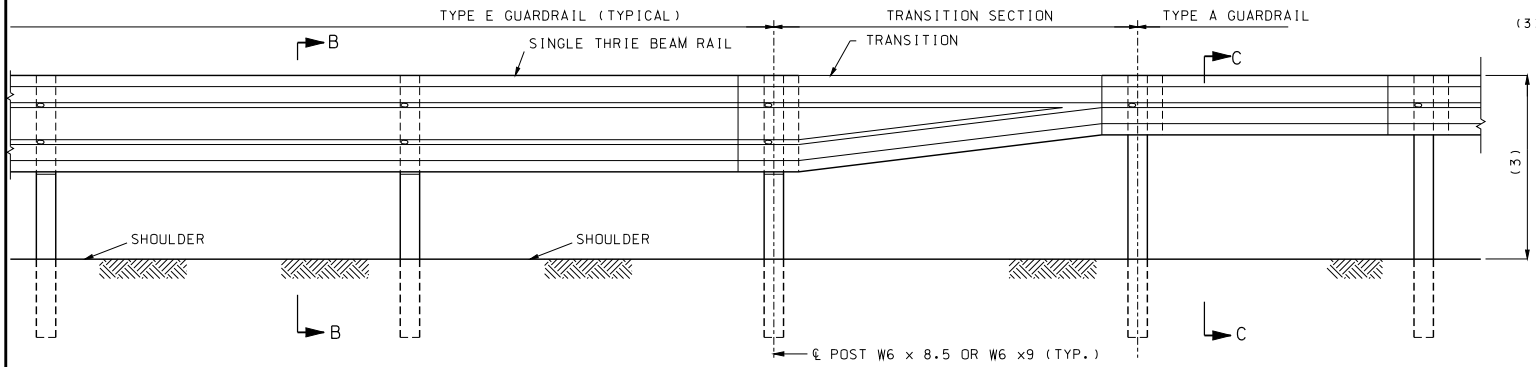

PART SECTION SHOWING TYPE E TO TYPE A GUARDRAIL TRANSITION

(1) THE CONTRACTOR MAY FURNISH EQUIVALENT SECTIONS FABRICATED FROM MATERIAL MEETING AND IN ACCORDANCE WITH SECTION 1040.

(2) IF THE TRANSITION IS CONNECTED TO A BRIDGE ANCHOR SECTION, POST SPACING FOR TYPE E GUARDRAIL AND THE TRANSITION SECTION SHALL BE 3'-1¼" . FOR ALL OTHER CASES, POST SPACING SHALL BE 6'-3".

(3) TRANSITION FROM 31" TO 29" HEIGHT OVER NEXT EIGHT UPSTREAM 12.5' W-BEAMS.

THE OVERALL NOMINAL DIMENSIONS SHOWN SHALL BE MET, ALTHOUGH THE SHAPE OF THE PLASTIC BLOCKS MAY VARY FROM THE SHAPE SHOWN, EXCEPT THE 7" ±¼" FLANGE AND THE OVERALL WIDTH DIMENSIONS MAY BE WAIVED IF APPROVED BY PROJECT OPERATIONS.

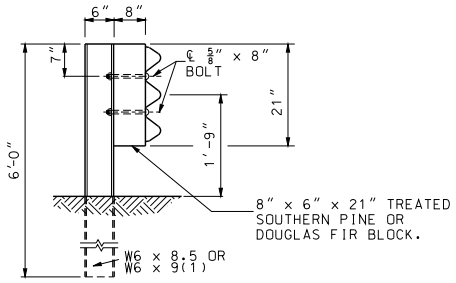

SECTION B-B
FOR WOOD BLOCKS

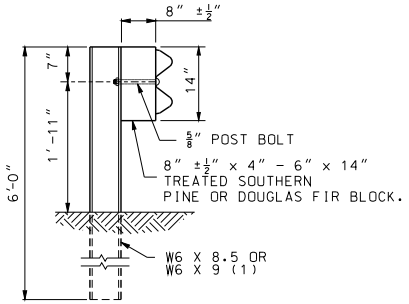

SECTION C-C
FOR WOOD BLOCKS

GENERAL NOTES:

TYPE E GUARDRAIL SHALL USE 6'-3" POST SPACING UNLESS 3'-1½" POST IS SPECIFIED.

THE THRIE BEAM RAIL FOR THE TYPE E GUARDRAIL AND THE TRANSITION SECTION SHALL BE MADE OF STEEL AND SHALL BE 12 GUAGE.

FOR PROTECTIVE COATING AND MATERAL REQUIREMENTS, SEE SECTION 1040 OF THE STANDARD SPECIFICATIONS.

SEE SHEET 3 OF 13 FOR REQUIREMENTS FOR SETTING POSTS AT OBSTRUCTIONS.

ALL DIMENSIONS ARE SUBJECT TO MANUFACTURING TOLERANCES EXCEPT WHERE ALLOWABLE TOLERANCES ARE SHOWN.

FOR DETAILS NOT SHOWN, SEE OTHER SHEETS OF THIS DRAWING.

MISSOURI HIGHWAYS AND TRANSPORTATION COMMISSION
105 WEST CAPITOL
JEFFERSON CITY, MO 65102
1-888-ASK-MODOT (1-888-275-6636)

STATE OF MISSOURI
KATHRYN PHILLIPS HARVEY
NUMBER PE-23751
PROFESSIONAL ENGINEER
THIS SHEET HAS BEEN SIGNED, SEALED AND DATED ELECTRONICALLY.

GUARDRAIL
TYPE E

DATE EFFECTIVE: 08/01/2012
DATE PREPARED: 11/26/2012

606.00AT

SHEET NO.
3 OF 8

IF A SEAL IS PRESENT ON THIS SHEET IT HAS BEEN ELECTRONICALLY SEALED AND DATED.

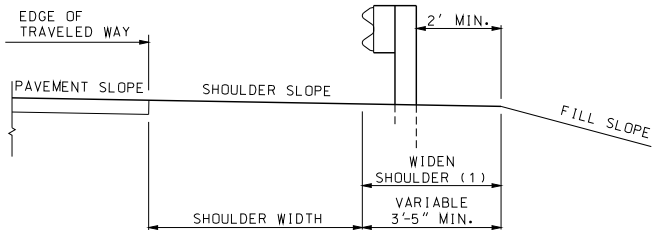

TYPICAL SECTION

(1) SHOULDER WIDENING SHALL CONSIST OF EMBANKMENT MATERIAL COMPACETED IN ACCORDANCE WITH SEC 203.4 OF THE STANDARD SPECIFICATIONS.

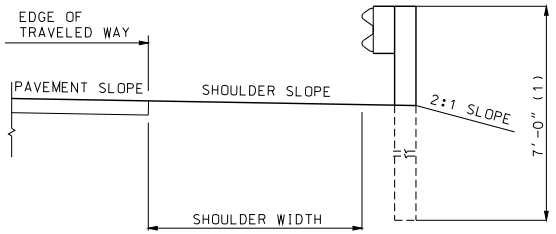

ALTERNATE TYPICAL SECTION AT SLOPE BREAKPOINT

(1) POST SHALL BE SPACED AT 3'-1½" ON CENTER.

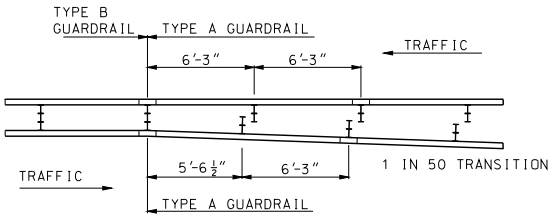

DETAIL FOR TRANSITIONING BETWEEN TYPE A AND TYPE B GUARDRAIL

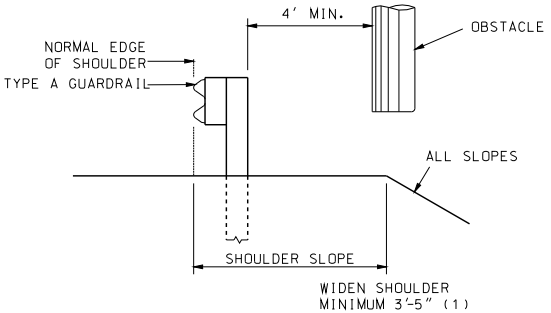

LOCATION OTHER THAN ℄ MEDIAN

LATERAL PLACEMENT OF GUARDRAIL FOR SHOULDER INSTALLATION

(1) SHOULDER WIDENING SHALL CONSIST OF EMBANKMENT MATERIAL COMPACETED IN ACCORDANCE WITH SEC 203.4 OF THE STANDARD SPECIFICATIONS.

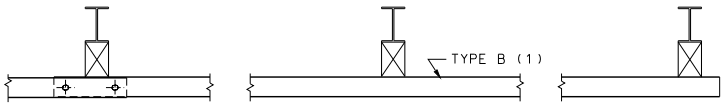

PLAN

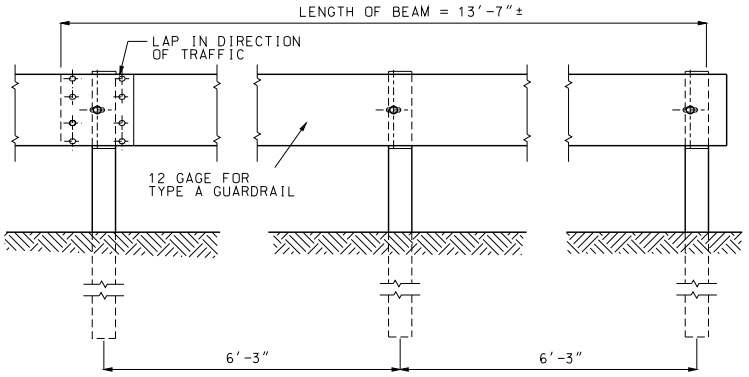

ELEVATION

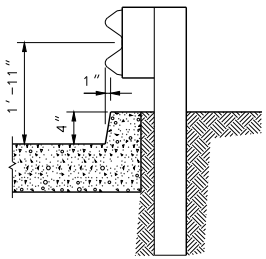

GUARDRAIL AT CURBS (3)

(1) APPROVED TYPE A CRASHWORTHY END TERMINAL.
(2) SHOULDER WIDENING SHALL CONSIST OF EMBANKMENT MATERIAL COMPACTED IN ACCORDANCE WITH SECTION 203.4 OF THE STANDARD SPECIFICATIONS.
(3) WHEN GUARDRAIL IS CONSTRUCTED OVER CURBS, THE CURBS SHALL BE CONSTRUCTED AS SHOWN.

MISSOURI HIGHWAYS AND TRANSPORTATION COMMISSION
105 WEST CAPITOL
JEFFERSON CITY, MO 65102
1-888-ASK-MODOT (1-888-275-6636)

STATE OF MISSOURI
KATHRYN PHILLIPS HARVEY
NUMBER PE-23751
PROFESSIONAL ENGINEER
THIS SHEET HAS BEEN SIGNED, SEALED AND DATED ELECTRONICALLY.

GUARDRAIL
LAYOUT

DATE EFFECTIVE: 08/01/2012
DATE PREPARED: 11/26/2012

606.00AT

SHEET NO. 4 OF 8

IF A SEAL IS PRESENT ON THIS SHEET IT HAS BEEN ELECTRONICALLY SEALED AND DATED.

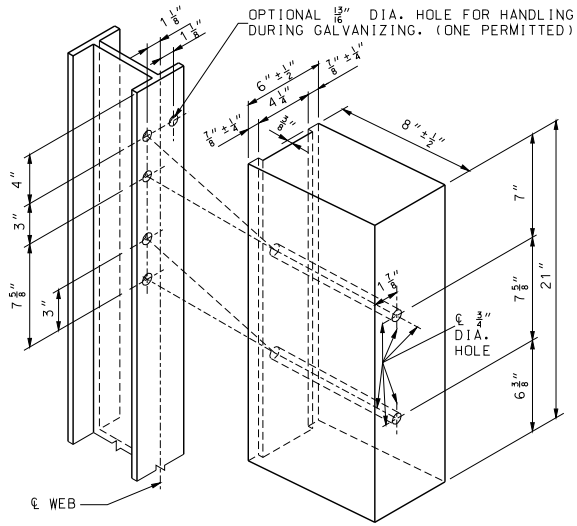

TYPE E
FOR STEEL POST & WOOD OR PLASTIC BLOCKS (1)

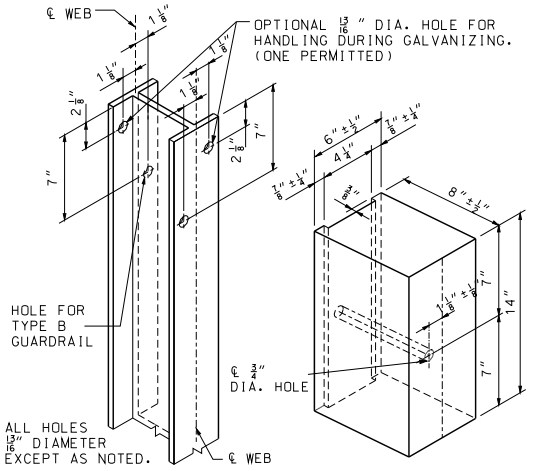

TYPE A AND TYPE B
FOR STEEL POST AND WOOD OR PLASTIC BLOCKS (1)

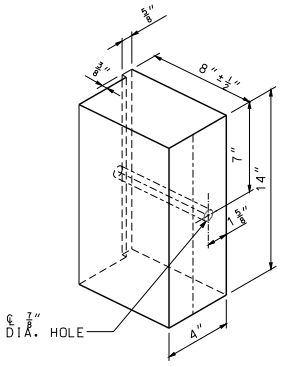

ALTERNATE DESIGN FOR WOOD BLOCK

(1) THE OVERALL NOMINAL DIMENSIONS SHOWN SHALL BE MET, ALTHOUGH THE SHAPE OF THE PLASTIC BLOCKS MAY VARY FROM THE SHAPE SHOWN, EXCEPT THE 7/8" ±1/4" FLANGE AND THE OVERALL WIDTH DIMENSIONS MAY BE WAIVED IF APPROVED BY PROJECT OPERATIONS.

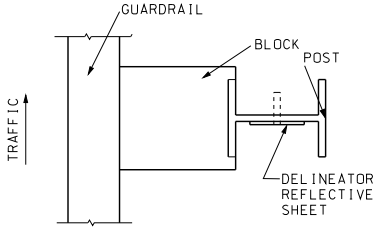

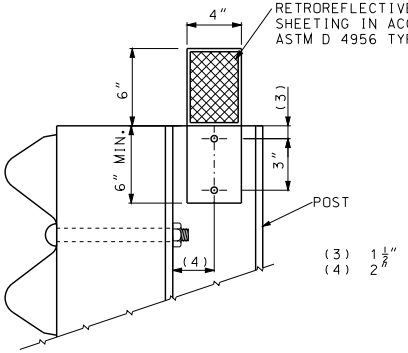

DELINEATORS SHALL BE AFFIXED WITH 1½" LONG X ¼" DIAMETER BOLTS FOR STEEL POSTS OR 2" (MIN.) LONG X ¼" DIAMETER SCREWS FOR WOOD POSTS. THE DIAMETER OF THE BOLT'S OR SCREW'S HEAD SHALL BE TWICE THE DIAMETER OF THE HOLE, WITH A MINIMUM OF ½". WASHERS SHALL BE USED WITH THE BOLTS AND SHALL HAVE ½" DIAMETER HOLES.

✳ REFLECTIVE SHEETING SHALL FOLLOW GUIDELINES OUTLINED IN SEC 1042.2.7 FOR CORRECT APPLICATION OF SHEETING TO DELINEATOR BODY. THE COLOR OF THE SHEETING SHALL MATCH THE CLOSEST ADJACENT PAVEMENT MARKING. RED SHEETING SHALL BE APPLIED TO THE BACK SIDE OF THE DELINEATOR WHEN THE DELINEATION IS PLACED ALONG AN INTERCHANGE RAMP WHERE IT COULD BE VIEWED BY WRONG WAY TRAFFIC.

DELINEATORS ON NEW GUARDRAIL

MISSOURI HIGHWAYS AND TRANSPORTATION COMMISSION
105 WEST CAPITOL
JEFFERSON CITY, MO 65102
1-888-ASK-MODOT (1-888-275-6636)

STATE OF MISSOURI
KATHRYN PHILLIPS HARVEY
NUMBER PE-2007051
PROFESSIONAL ENGINEER
THIS SHEET HAS BEEN SIGNED, SEALED AND DATED ELECTRONICALLY.

GUARDRAIL
POST AND BLOCK

DATE EFFECTIVE: 08/01/2012
DATE PREPARED: 11/26/2012

606.00AT

SHEET NO. 5 OF 8

IF A SEAL IS PRESENT ON THIS SHEET IT HAS BEEN ELECTRONICALLY SEALED AND DATED.

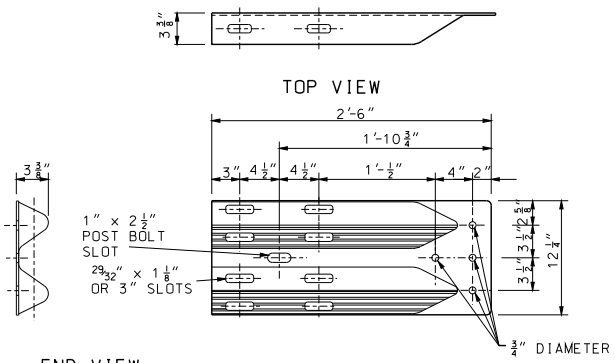

TERMINAL CONNECTOR

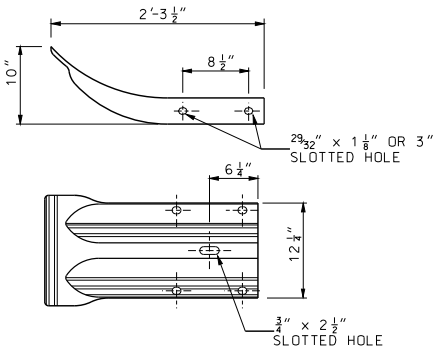

END SECTION
12 GAGE

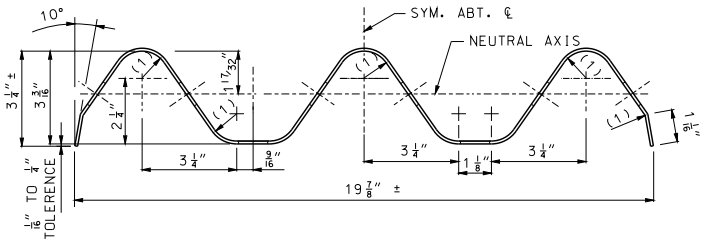

SECTION THRU THRIE BEAM RAIL

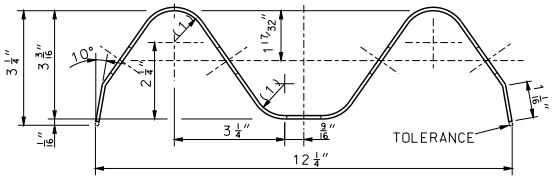

SECTION THROUGH BEAM

(1) 15/16" RADIUS

(2) 2" (TOLERANCE +1 1/4", -1/4")

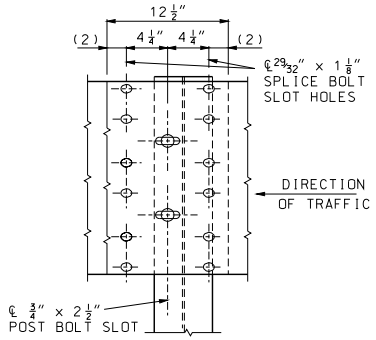

BEAM SPLICE AT POST TYPE E GUARDRAIL

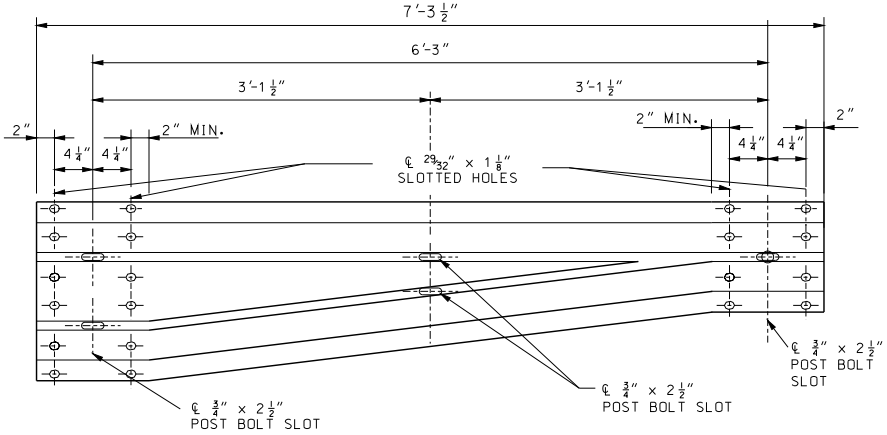

ELEVATION OF ASYMMETRICAL TRANSITION SECTION

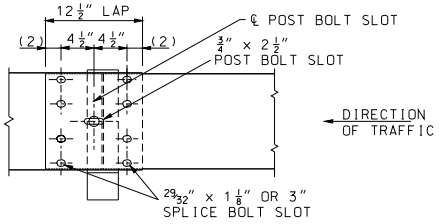

BEAM SPLICE AT POST TYPE A, B AND D GUARDRAIL

NOTE: PORTIONS OF BEAM WITH UNUSED BOLT SLOTS TO BE LAPPED BEHIND.

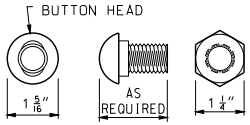

OVAL SHOULDER SHALL BE OF ADEQUATE HEIGHT, LENGTH & SHAPE TO PREVENT TURNING DURING INSTALLATION OR REMOVAL OF BOLT.

5/8" POST OR SPLICE BOLT

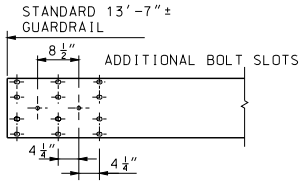

BEAM DETAILS SHOWING LOCATION OF ADDITIONAL BOLT SLOTS NECESSARY TO OBTAIN GUARDRAIL OFFSET.

IF A SEAL IS PRESENT ON THIS SHEET IT HAS BEEN ELECTRONICALLY SEALED AND DATED.

MISSOURI HIGHWAYS AND TRANSPORTATION COMMISSION
105 WEST CAPITOL
JEFFERSON CITY, MO 65102
1-888-ASK-MODOT (1-888-275-6636)

STATE OF MISSOURI
KATHRYN PHILLIPS HARVEY
NUMBER PE-23751
PROFESSIONAL ENGINEER
THIS SHEET HAS BEEN SIGNED, SEALED AND DATED ELECTRONICALLY.

GUARDRAIL
RAIL ELEMENTS

DATE EFFECTIVE:	08/01/2012	606.00AT	SHEET NO. 6 OF 8
DATE PREPARED:	7/19/2012		

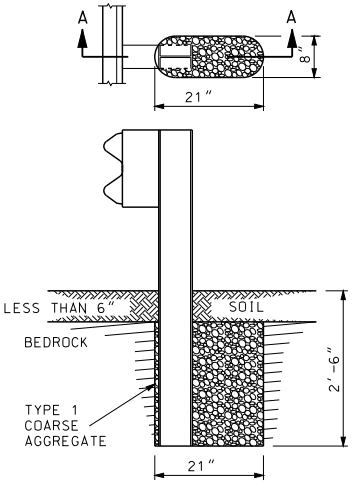

SECTION A-A
ROCK ENCOUNTERED
UP TO 6" BENEATH SURFACE

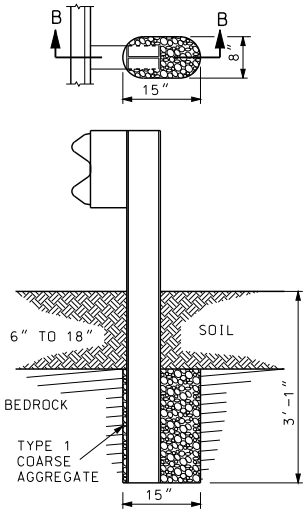

SECTION B-B
ROCK ENCOUNTERED
6" TO 18" BENEATH SURFACE

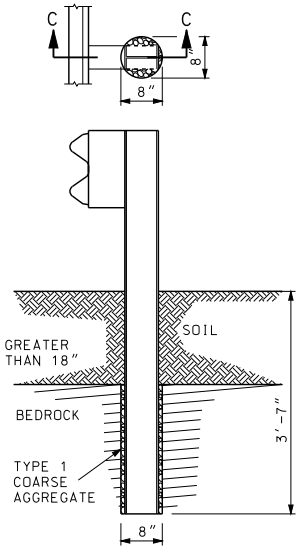

SECTION C-C
ROCK ENCOUNTERED MORE
THAN 18" BENEATH SURFACE

SETTING POST IN SOLID ROCK

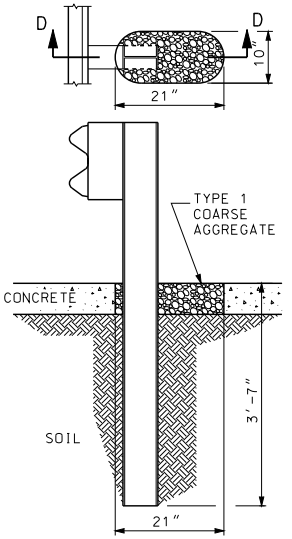

SECTION D-D

SETTING POST THROUGH CONCRETE

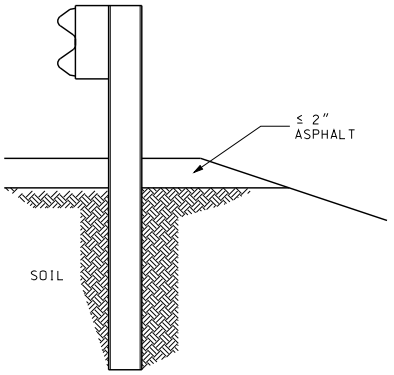

SETTING POST THROUGH ASPHALT

GENERAL NOTES:

HOLES IN SOLID ROCK SHALL PROVIDE A DIAMETER OF NOT LESS THAN 4 INCHES GREATER THAN THE MAXIMUM TRANSVERSE DIMENSION OF THE POST SECTION.

POST MAY BE SHORTER WHERE PLACED IN 2 FEET OF SOLID ROCK. STEEL POSTS MAY BE FLAME OR SAW CUT. REPAIR OF CUT SHALL BE IN ACCORDANCE WITH SECTION 712 OF THE STANDARD SPECIFICATIONS.

MISSOURI HIGHWAYS AND TRANSPORTATION COMMISSION
105 WEST CAPITOL
JEFFERSON CITY, MO 65102
1-888-ASK-MODOT (1-888-275-6636)

STATE OF MISSOURI
KATHRYN PHILLIPS HARVEY
NUMBER PE-2375I
PROFESSIONAL ENGINEER
THIS SHEET HAS BEEN SIGNED, SEALED AND DATED ELECTRONICALLY.

GUARDRAIL
SPECIAL INSTALLATIONS

DATE EFFECTIVE: 08/01/2012
DATE PREPARED: 7/19/2012

606.00AT

SHEET NO.
7 OF 8

IF A SEAL IS PRESENT ON THIS SHEET IT HAS BEEN ELECTRONICALLY SEALED AND DATED.

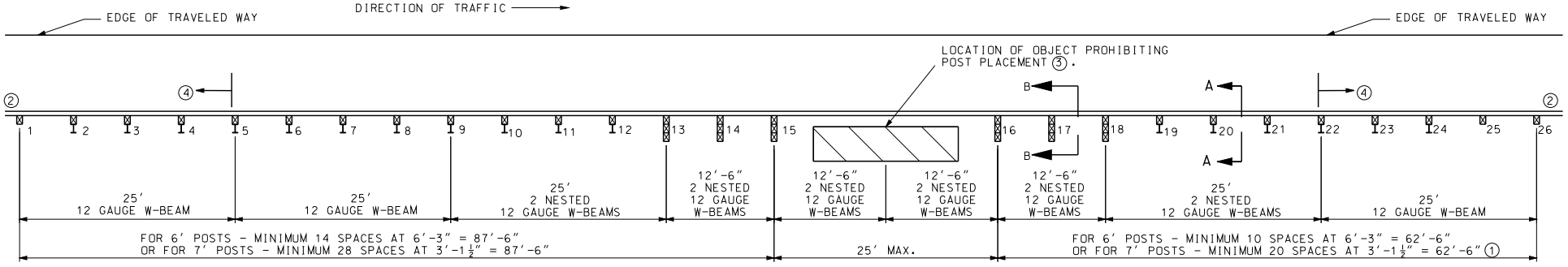

PLAN

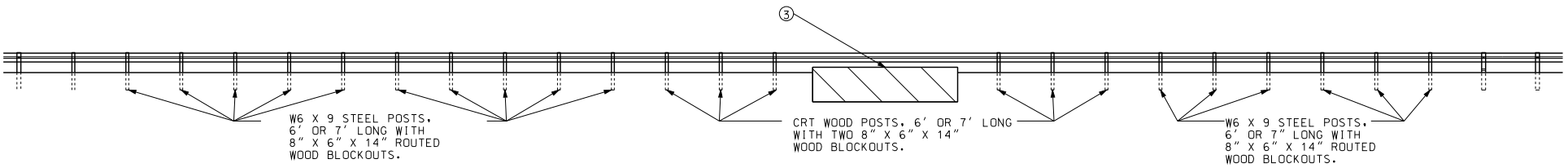

ELEVATION

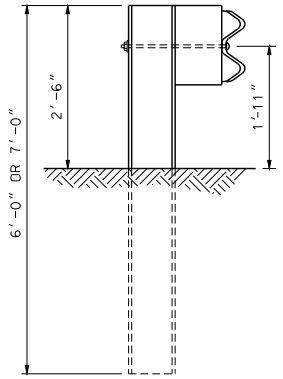

SECTION A-A

W6 X 9 STEEL POSTS, 6' OR 7' LONG WITH 8" X 6" X 14" ROUTED WOOD BLOCKOUTS POSTS 3 THROUGH 12 AND 19 THROUGH 24.

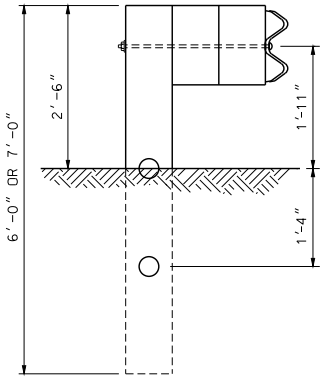

SECTION B-B

CRT WOOD POSTS, 6' OR 7' LONG WITH TWO8" X 6" X 14" WOOD BLOCKOUTS POSTS 13 THROUGH 18.

① IF LOCATED WITHIN THE CLEAR ZONE OF A TWO-WAY ROADWAY, THE MINIMUM LENGTH IS 87'-6".

② ADDITIONAL GUARDRAIL AS REQUIRED, INCLUDING END TREATMENT.

③ THE POST MAY BE SKIPPED DUE TO THE PRESENCE OF AN OBSTACLE SUCH AS A CULVERT.

④ PLACE END TREATMENT NO CLOSER TO THE SKIPPED POST THAN POSTS 5 AND 22.

MISSOURI HIGHWAYS AND TRANSPORTATION COMMISSION
105 WEST CAPITOL
JEFFERSON CITY, MO 65102
1-888-ASK-MODOT (1-888-275-6636)

STATE OF MISSOURI
KATHRYN PHILLIPS HARVEY
NUMBER PE-23751
PROFESSIONAL ENGINEER
THIS SHEET HAS BEEN SIGNED, SEALED AND DATED ELECTRONICALLY.

GUARDRAIL
LONG-SPAN NESTED W-BEAM

DATE EFFECTIVE: 08/01/2012
DATE PREPARED: 7/19/2012

606.00AT

SHEET NO. 8 OF 8

IF A SEAL IS PRESENT ON THIS SHEET IT HAS BEEN ELECTRONICALLY SEALED AND DATED.

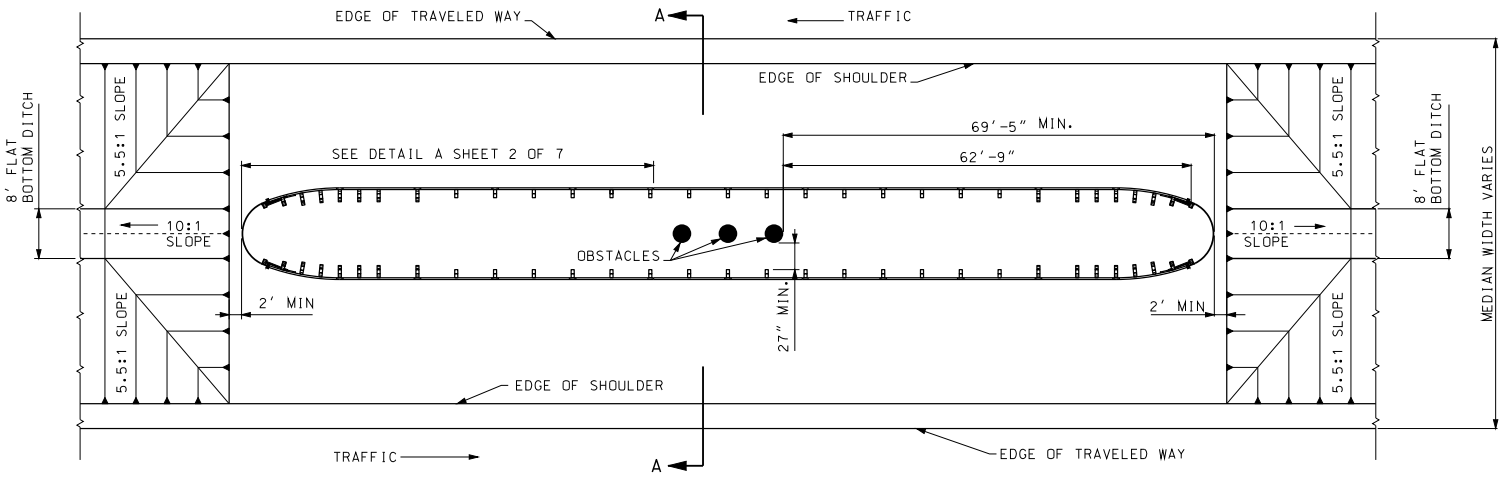

PIER AT ℄ OF MEDIAN
PLAN VIEW

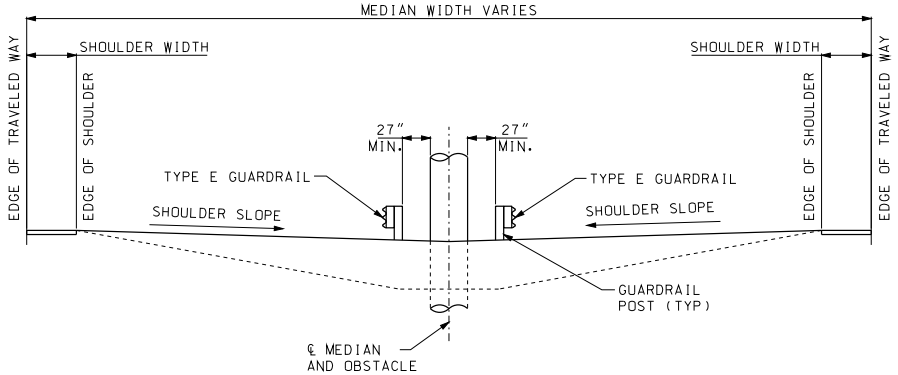

SECTION A-A

GENERAL NOTES:

WOOD POSTS AND WOOD BLOCKS MAY BE USED ON TYPE E GUARDRAIL.

THE BULLNOSE GUARDRAIL PAY ITEM INCLUDES THE STRUCTURE BETWEEN POST 10 AND THE NOSE. THE REMAINING GUARDRAIL WILL BE PAID FOR AS STANDARD GUARDRAIL ITEMS.

SUITABLE DRAINAGE MUST BE PROVIDED WHEN MEDIAN GRADING IMPEDES NORMAL FLOW.

MISSOURI HIGHWAYS AND TRANSPORTATION COMMISSION
105 WEST CAPITOL
JEFFERSON CITY, MO 65102
1-888-ASK-MODOT (1-888-275-6636)

STATE OF MISSOURI
KATHRYN PHILLIPS HARVEY
NUMBER PE-23751
PROFESSIONAL ENGINEER
THIS SHEET HAS BEEN SIGNED, SEALED AND DATED ELECTRONICALLY.

MEDIAN PIER PROTECTION
BULLNOSE GUARDRAIL SYSTEM

DATE EFFECTIVE: 08/01/2012
DATE PREPARED: 7/27/2012

606.01F

SHEET NO. 1 OF 9

IF A SEAL IS PRESENT ON THIS SHEET IT HAS BEEN ELECTRONICALLY SEALED AND DATED.

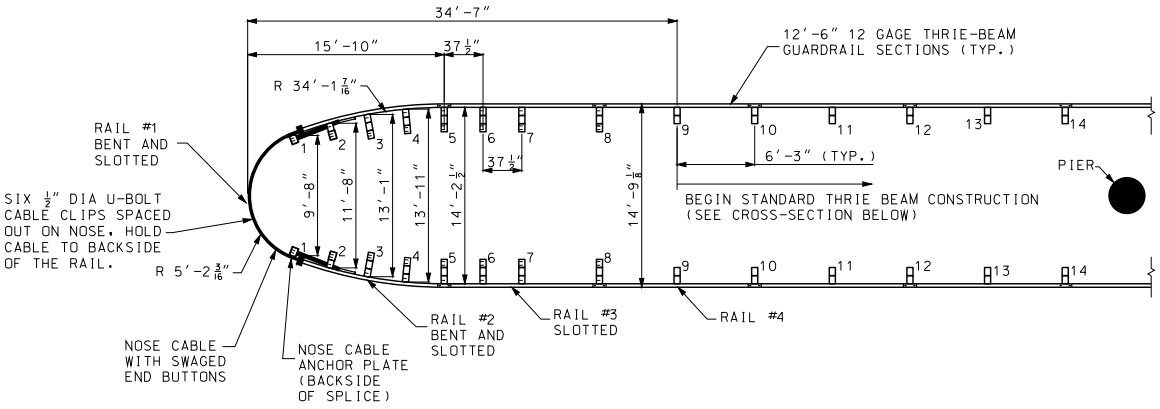

DETAIL A

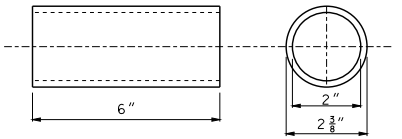

BREAKAWAY TERMINAL POST SLEEVE

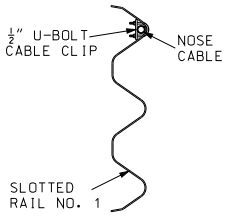

U-BOLT CABLE CLIP DETAIL

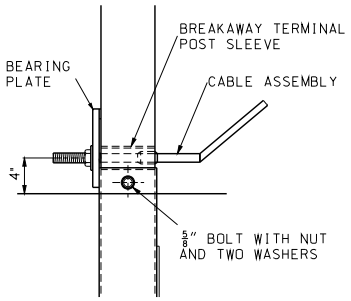

POST 1 DETAIL

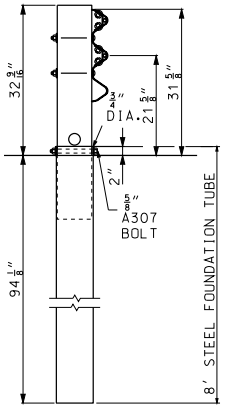

THRIE BEAM BCT POST WITH 96 1/16″ FOUNDATION TUBE POST 1

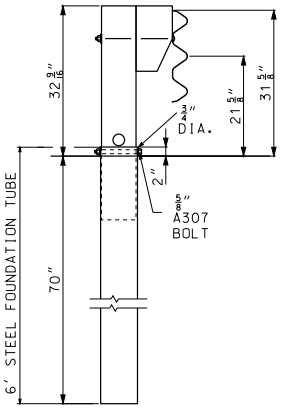

THRIE BEAM BCT POST WITH 72″ FOUNDATION TUBE AND 14″ TAPERED BLOCK POST 2

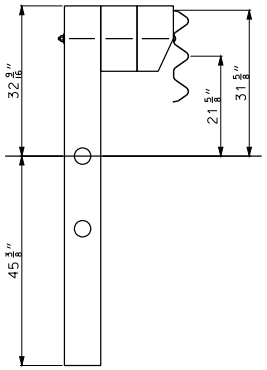

THRIE BEAM CRT POST 78″ LONG WITH 14″ BLOCK AND 14″ TAPERED BLOCK POSTS 3, 4, 5, 6, 7, 8

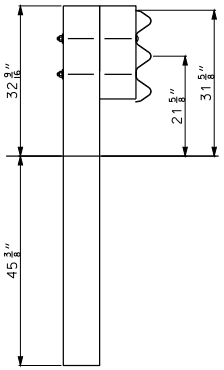

THRIE BEAM POST 78″ LONG WITH 14″ BLOCK POSTS 9 AND 10

POST DETAILS

GENERAL NOTE:

RAILS NUMBERS 1, 2, 3 AND 4 ARE TYPE E GUARDRAIL.
RAIL NUMBER 4 IS A STANDARD THRIE BEAM, NOT SLOTTED.

MISSOURI HIGHWAYS AND TRANSPORTATION COMMISSION
105 WEST CAPITOL
JEFFERSON CITY, MO 65102
1-888-ASK-MODOT (1-888-275-6636)

STATE OF MISSOURI
KATHRYN PHILLIPS HARVEY
NUMBER PE-23751
PROFESSIONAL ENGINEER
THIS SHEET HAS BEEN SIGNED, SEALED AND DATED ELECTRONICALLY.

MEDIAN PIER PROTECTION
BULLNOSE GUARDRAIL SYSTEM

DATE EFFECTIVE:	08/01/2012	606.01F	SHEET NO.
DATE PREPARED:	7/27/2012		2 OF 9

IF A SEAL IS PRESENT ON THIS SHEET IT HAS BEEN ELECTRONICALLY SEALED AND DATED.

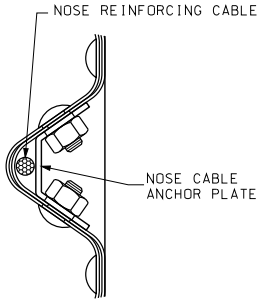

DETAIL B

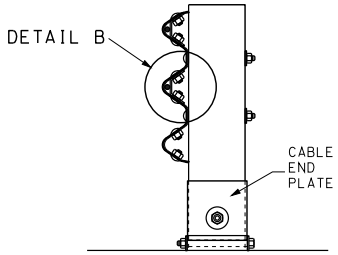

SECTION A-A

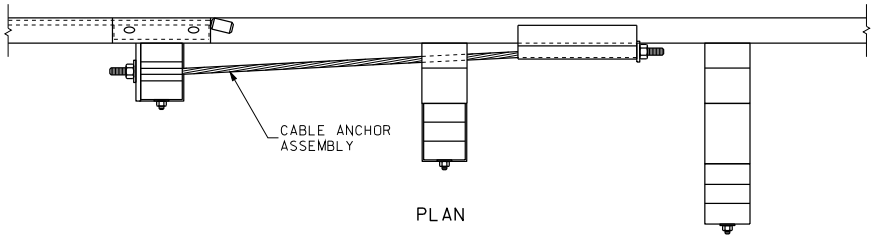

PLAN

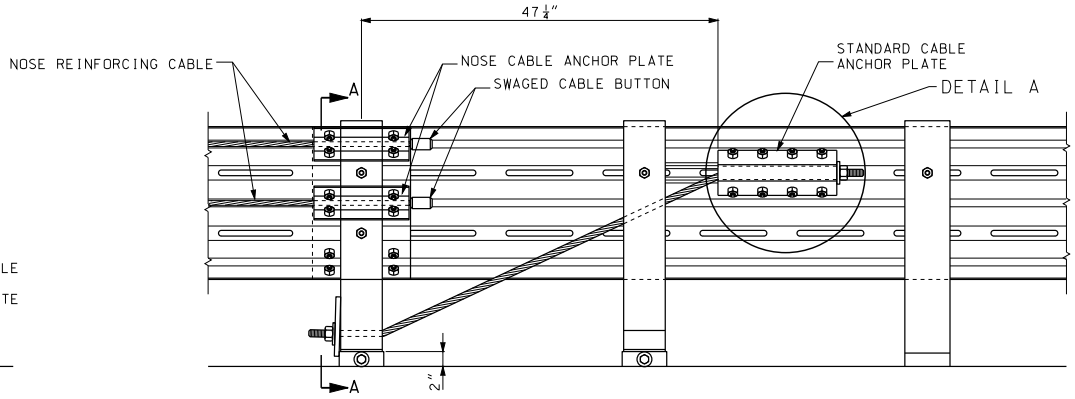

ELEVATION

CABLE ANCHOR ASSEMBLY

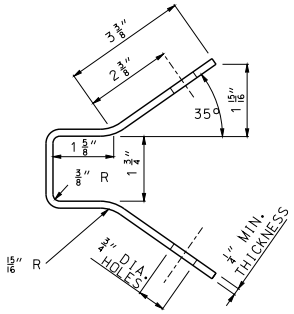

END VIEW

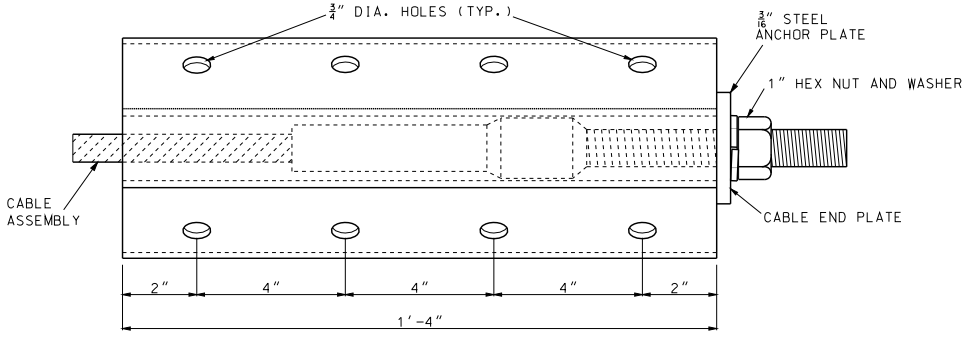

DETAIL A

IF A SEAL IS PRESENT ON THIS SHEET IT HAS BEEN ELECTRONICALLY SEALED AND DATED.

MISSOURI HIGHWAYS AND TRANSPORTATION COMMISSION
105 WEST CAPITOL
JEFFERSON CITY, MO 65102
1-888-ASK-MODOT (1-888-275-6636)

STATE OF MISSOURI
KATHRYN PHILLIPS HARVEY
NUMBER PE-23751
PROFESSIONAL ENGINEER
THIS SHEET HAS BEEN SIGNED, SEALED AND DATED ELECTRONICALLY.

MEDIAN PIER PROTECTION
BULLNOSE GUARDRAIL SYSTEM
CABLE ANCHOR

DATE EFFECTIVE: 08/01/2012
DATE PREPARED: 7/27/2012

606.01F

SHEET NO. 3 OF 9

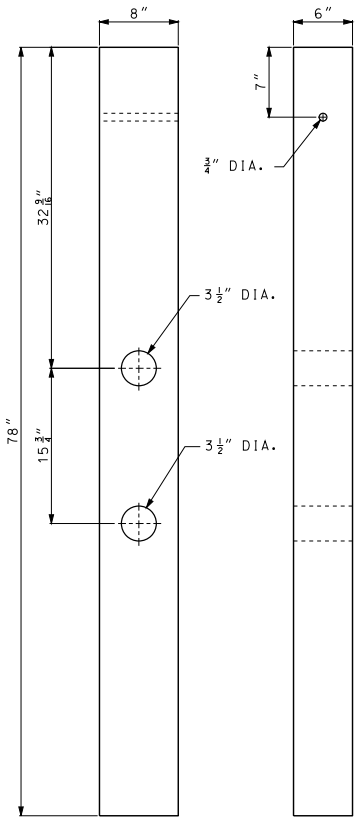

THRIE BEAM CRT POSTS

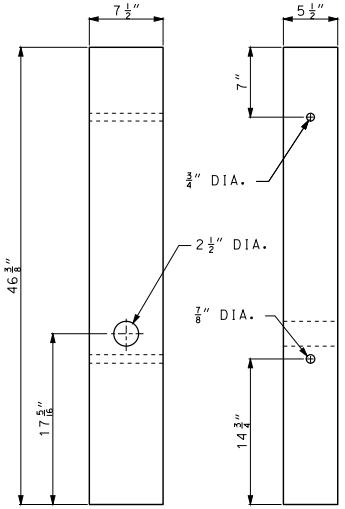

THRIE BEAM ANCHOR POSTS

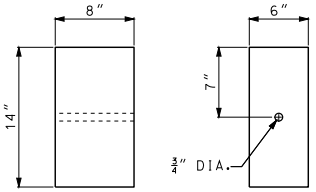

POSTS 2 THROUGH 8
STANDARD BLOCKS

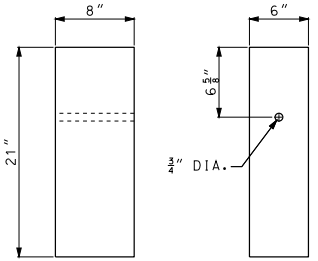

BLOCKS FOR POSTS 9 AND 10
STANDARD BLOCKS

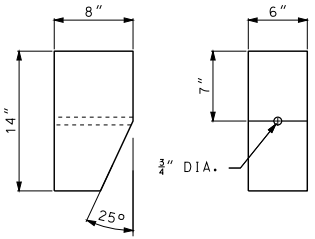

TAPERED BLOCK

IF A SEAL IS PRESENT ON THIS SHEET IT HAS BEEN ELECTRONICALLY SEALED AND DATED.

MISSOURI HIGHWAYS AND TRANSPORTATION COMMISSION
105 WEST CAPITOL
JEFFERSON CITY, MO 65102
1-888-ASK-MODOT (1-888-275-6636)

STATE OF MISSOURI
KATHRYN PHILLIPS HARVEY
NUMBER PE-23751
PROFESSIONAL ENGINEER
THIS SHEET HAS BEEN SIGNED, SEALED AND DATED ELECTRONICALLY.

MEDIAN PIER PROTECTION

BULLNOSE GUARDRAIL SYSTEM POST AND BLOCKS

DATE EFFECTIVE: 08/01/2012
DATE PREPARED: 7/27/2012

606.01F

SHEET NO. 4 OF 9

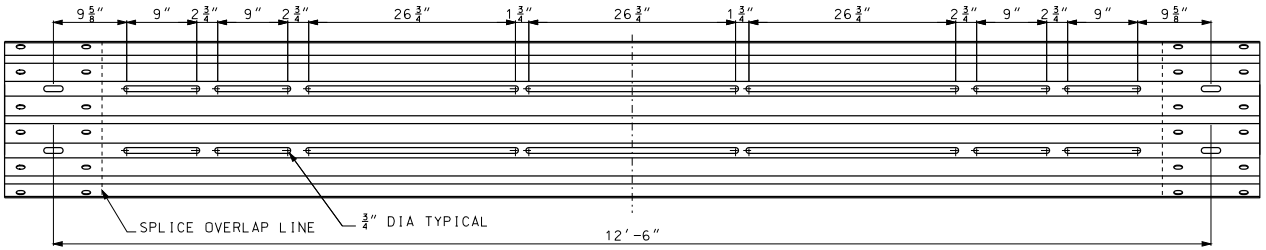

RAIL SECTION 1 (NOSE SECTION)

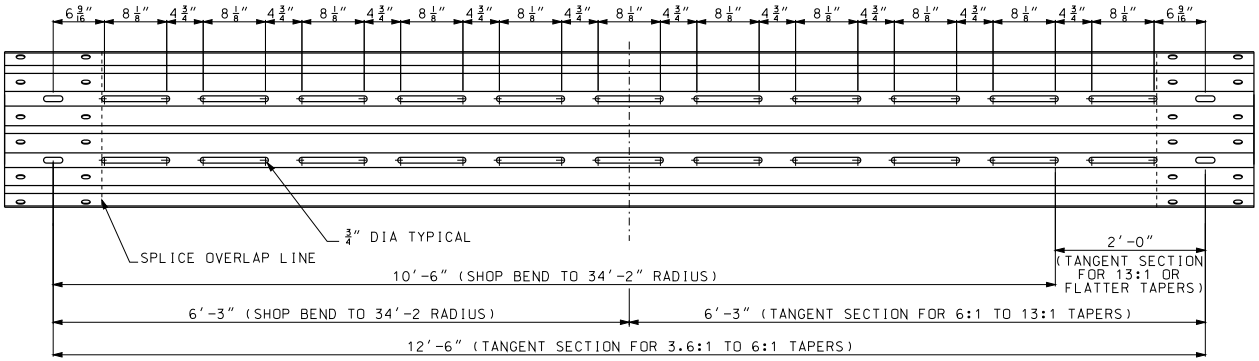

RAIL SECTION 2

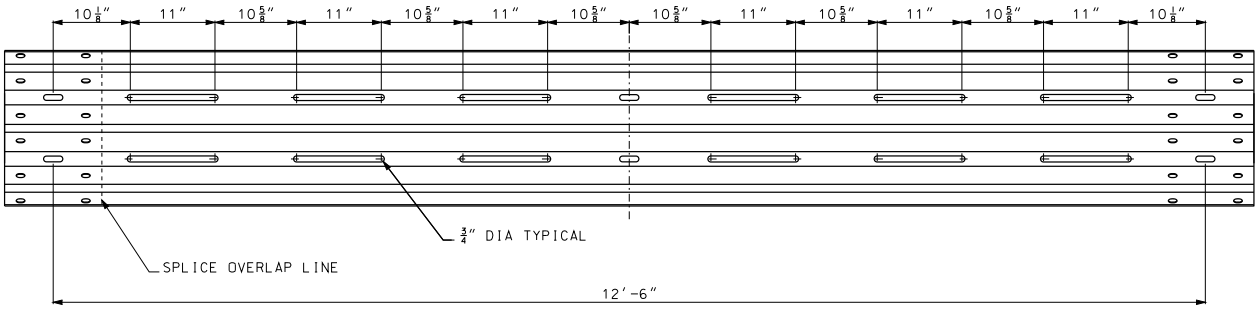

RAIL SECTION 3

IF A SEAL IS PRESENT ON THIS SHEET IT HAS BEEN ELECTRONICALLY SEALED AND DATED.

MISSOURI HIGHWAYS AND TRANSPORTATION COMMISSION
105 WEST CAPITOL
JEFFERSON CITY, MO 65102
1-888-ASK-MODOT (1-888-275-6636)

STATE OF MISSOURI
KATHRYN PHILLIPS HARVEY
NUMBER PE-23751
PROFESSIONAL ENGINEER
THIS SHEET HAS BEEN SIGNED, SEALED AND DATED ELECTRONICALLY.

MEDIAN PIER PROTECTION

BULLNOSE GUARDRAIL SYSTEM
RAIL SECTION 1, 2 AND 3

DATE EFFECTIVE: 08/01/2012
DATE PREPARED: 7/27/2012

606.01F

SHEET NO. 5 OF 9

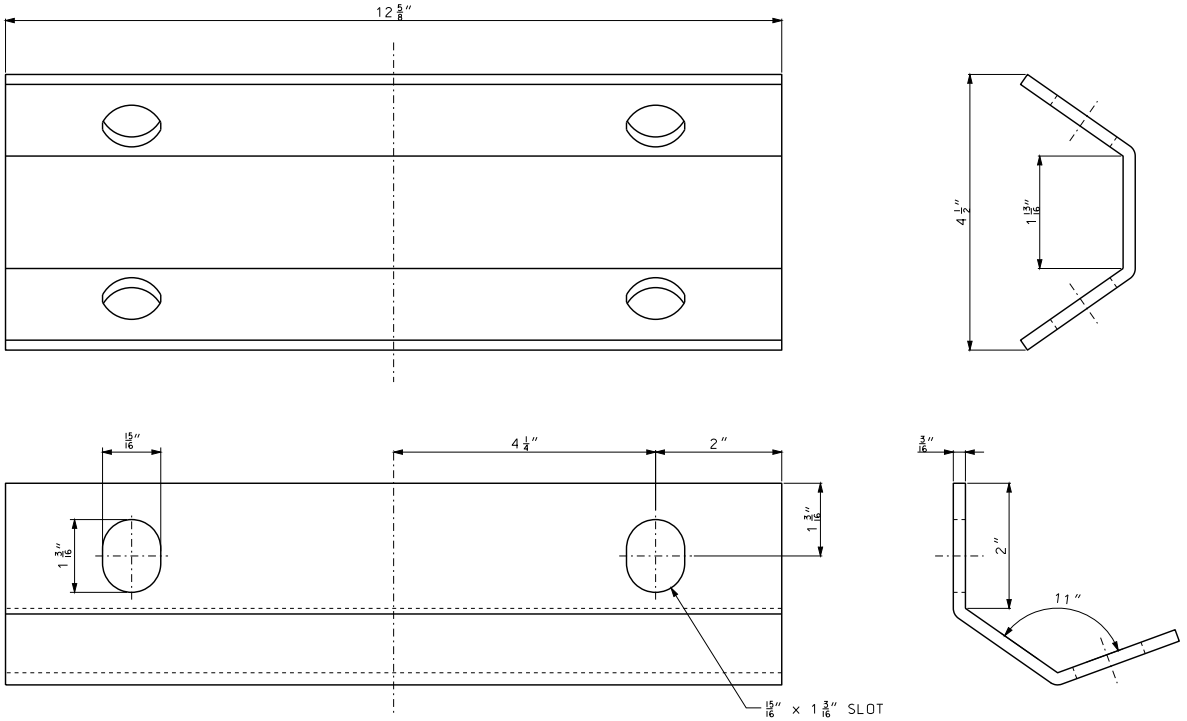

STEEL PLATE, A306
12 5/8" x 5 7/8" x 3/16"

(1) STUD, THREADED ENTIRE LENGTH.

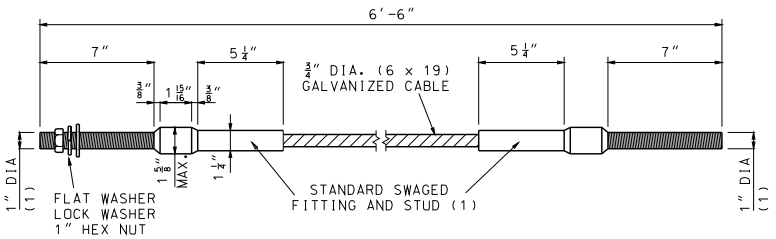

DETAIL OF CABLE ASSEMBLY

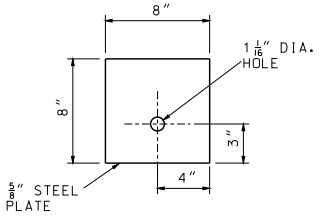

DETAIL OF
STEEL BEARING PLATE

IF A SEAL IS PRESENT ON THIS SHEET IT HAS BEEN ELECTRONICALLY SEALED AND DATED.

MISSOURI HIGHWAYS AND TRANSPORTATION COMMISSION
105 WEST CAPITOL
JEFFERSON CITY, MO 65102
1-888-ASK-MODOT (1-888-275-6636)

STATE OF MISSOURI
KATHRYN PHILLIPS HARVEY
NUMBER PE-23751
PROFESSIONAL ENGINEER
THIS SHEET HAS BEEN SIGNED, SEALED AND DATED ELECTRONICALLY.

MEDIAN PIER PROTECTION
BULLNOSE GUARDRAILS SYSTEM
PLATES AND CABLE ASSEMBLY

DATE EFFECTIVE: 08/01/2012
DATE PREPARED: 7/27/2012

606.01F

SHEET NO.
6 OF 9

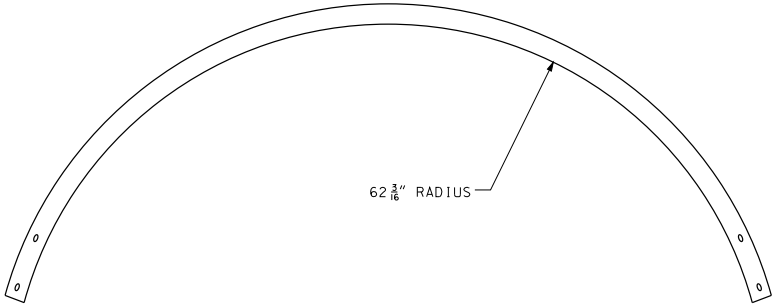

TOP VIEW, RAIL #1

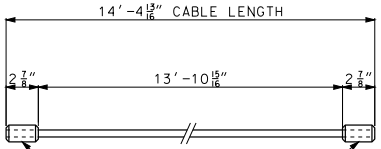

"COLD TUFF" BUTTON, S-409 SIZE NO. 12 SB 2 7/8"
STOCK NO. 1040395 FOR 5/8" DIA (6 x 25) WIRE ROPE
(OR ANY SIMILARLY SIZED SWAGE-GRIP BUTTON FERRULES)

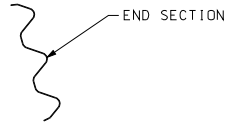

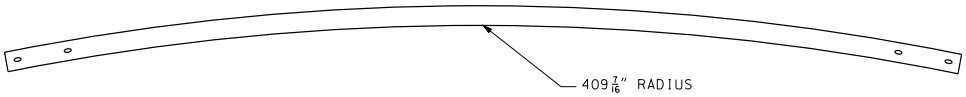

TOP VIEW, RAIL #2

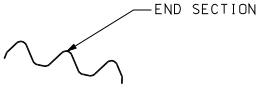

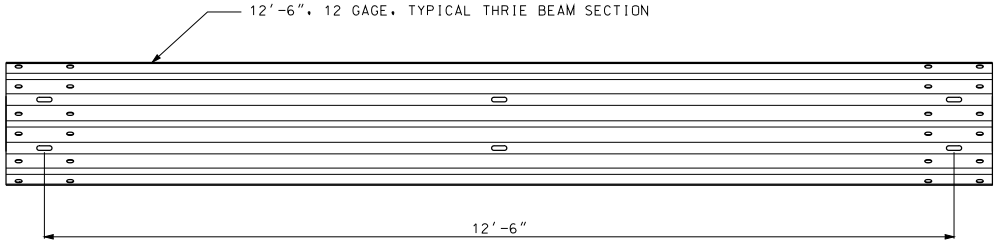

FRONT VIEW (UNBENT)

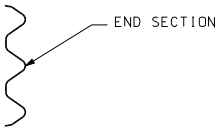

IF A SEAL IS PRESENT ON THIS SHEET IT HAS BEEN ELECTRONICALLY SEALED AND DATED.

MISSOURI HIGHWAYS AND TRANSPORTATION COMMISSION
105 WEST CAPITOL
JEFFERSON CITY, MO 65102
1-888-ASK-MODOT (1-888-275-6636)

STATE OF MISSOURI
KATHRYN PHILLIPS HARVEY
NUMBER PE-2007051
PROFESSIONAL ENGINEER
THIS SHEET HAS BEEN SIGNED, SEALED AND DATED ELECTRONICALLY.

MEDIAN PIER PROTECTION
BULLNOSE GUARDRAIL SYSTEM
THRIE BEAM AND CABLE LENGTH

DATE EFFECTIVE: 08/01/2012
DATE PREPARED: 7/27/2012

606.01F

SHEET NO. 7 OF 9

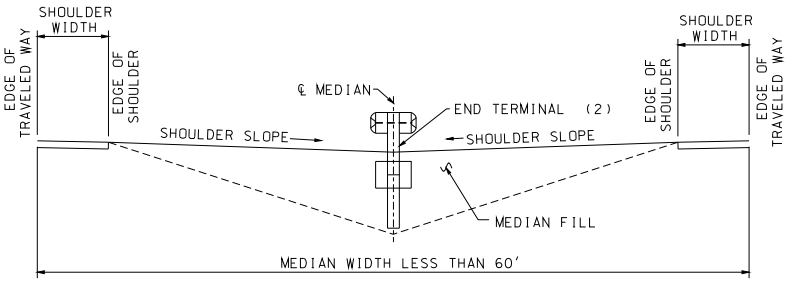

SECTION C-C

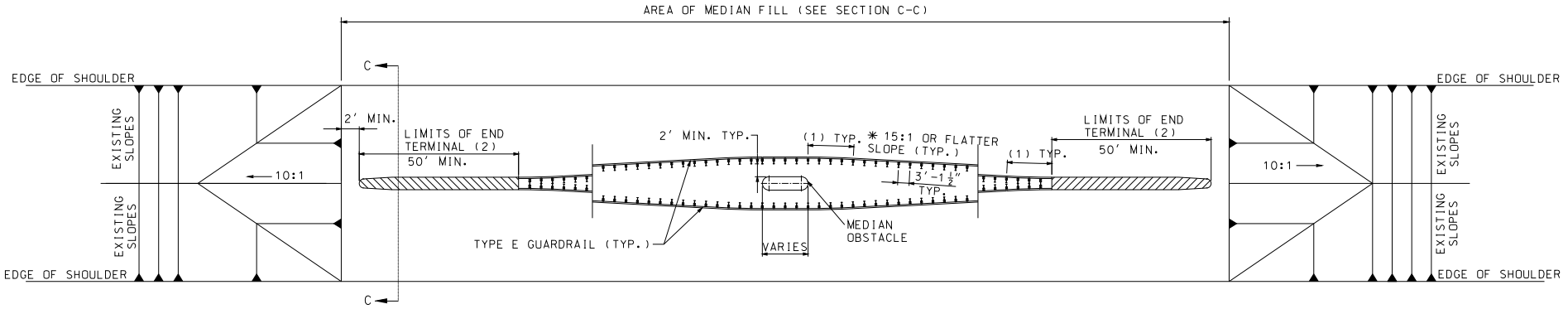

(1) TYPE E GUARDRAIL 12'-6" IN LENGTH AND FACTORY FORMED TO THE REQUIRED RADIUS.

(2) PAYMENT FOR THE END TERMINAL WILL BE CONSIDERED FULL COMPENSATION FOR ANY TRANSITION SECTIONS, BACKUP ASSEMBLIES, OR OTHER ITEMS NECESSARY FOR PROPER INSTALLATION AS REQUIRED BY THE MANUFACTURER.

* VARY SLOPE NO STEEPER THAN 15:1 TO UTILIZE A FULL 12.5' LENGTH OF GUARDRAIL WHEN ATTACHING TO THE CRASHWORTHY END TERMINAL.

GENERAL NOTES:

TYPE B CRASHWORTHY END TERMINAL SHALL BE LATEST VERSION AND SHALL BE INSTALLED ACCORDING TO MANUFACTURER'S RECOMENDATIONS.

MISSOURI HIGHWAYS AND TRANSPORTATION COMMISSION
105 WEST CAPITOL
JEFFERSON CITY, MO 65102
1-888-ASK-MODOT (1-888-275-6636)

STATE OF MISSOURI
KATHRYN PHILLIPS HARVEY
NUMBER PE-23751
PROFESSIONAL ENGINEER
THIS SHEET HAS BEEN SIGNED, SEALED AND DATED ELECTRONICALLY.

TYPE E MEDIAN PIER PROTECTION

MEDIAN LESS THAN 60'

DATE EFFECTIVE: 08/01/2012
DATE PREPARED: 7/27/2012

606.01F

SHEET NO. 8 OF 9

IF A SEAL IS PRESENT ON THIS SHEET IT HAS BEEN ELECTRONICALLY SEALED AND DATED.

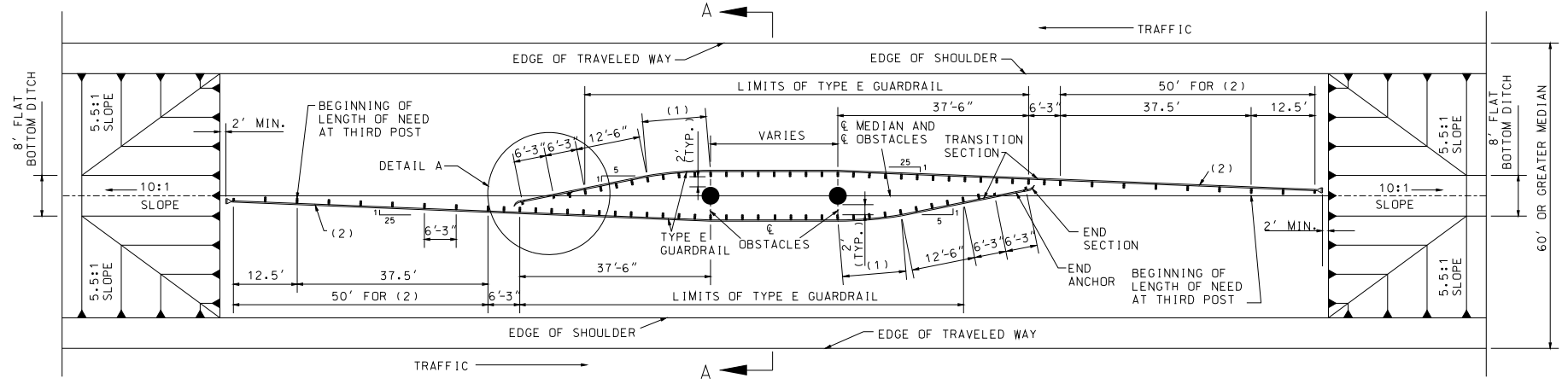

PIER AT ℄ OF MEDIAN

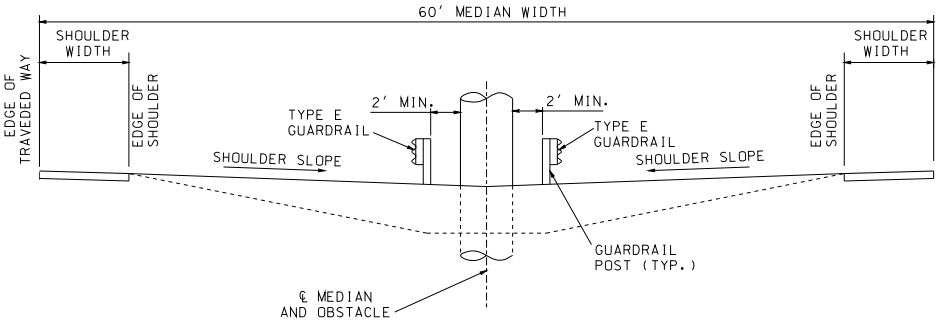

SECTION A-A

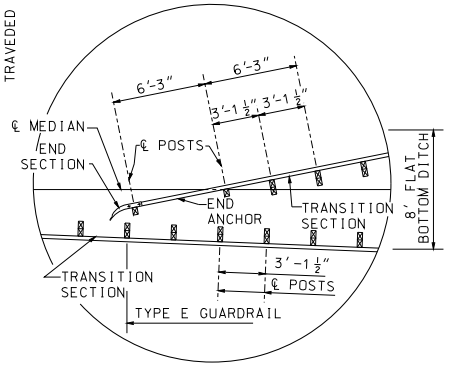

DETAIL A

(1) TYPE E GUARDRAIL IN THIS REGION SHALL BE 12'6" IN LENGTH AND FACTORY FORMED TO A 75' RADIUS.

(2) TYPE A NON-FLARED CRASHWORTHY END TREATMENT.

GENERAL NOTES:

WOOD POSTS AND WOOD BLOCKS MAY BE USED ON TYPE E GUARDRAIL. END ANCHOR SECTION TO BE USED ON TERMINAL END OF TYPE E GUARDRAIL.

END ANCHOR TO BE LOCATED EYOND THE LONGITUDINAL LIMITS OF TYPE A NON-FLARED CRASHWORTHY END TERMINAL.

TYPE A NON-FLARED CRASHWORTHY END TERMINAL SHALL BE THE LATEST VERSION AND SHALL BE INSTALLED ACCORDING TO MANUFACTURER'S RECOMMENDATIONS.

MISSOURI HIGHWAYS AND TRANSPORTATION COMMISSION
105 WEST CAPITOL
JEFFERSON CITY, MO 65102
1-888-ASK-MODOT (1-888-275-6636)

STATE OF MISSOURI
KATHRYN PHILLIPS HARVEY
NUMBER PE-2375T
PROFESSIONAL ENGINEER
THIS SHEET HAS BEEN SIGNED, SEALED AND DATED ELECTRONICALLY.

TYPE E MEDIAN PIER PROTECTION

60' MEDIAN OR GREATER

DATE EFFECTIVE:	08/01/2012	606.01F	SHEET NO. 9 OF 9
DATE PREPARED:	7/27/2012		

IF A SEAL IS PRESENT ON THIS SHEET IT HAS BEEN ELECTRONICALLY SEALED AND DATED.

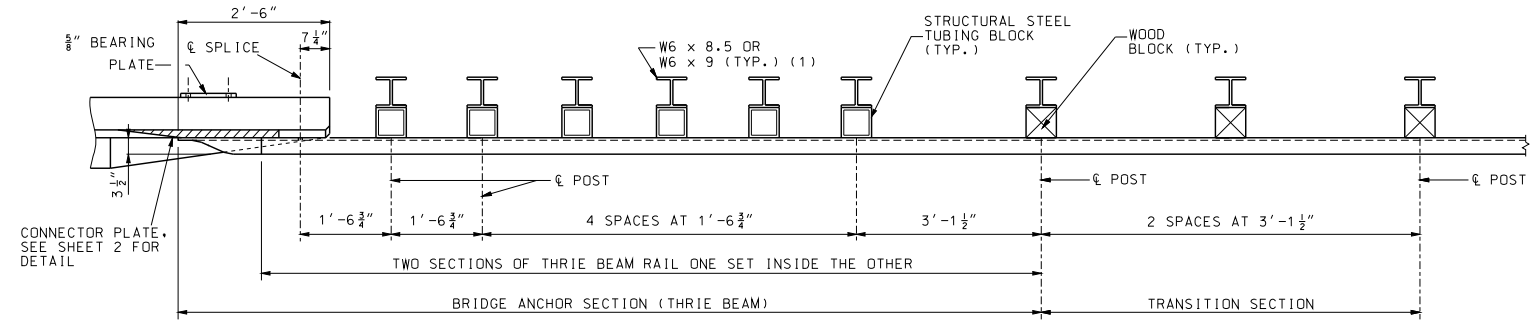

DIRECTION OF TRAFFIC

PLAN

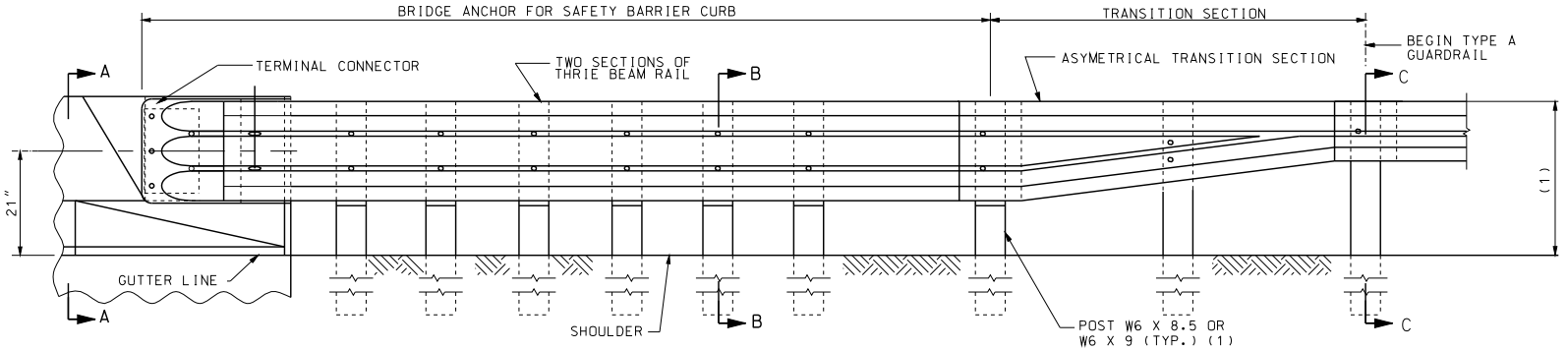

PART SECTION THRU SLAB AT END OF WING

(1) TRANSITION FROM 31" TO 29" HEIGHT OVER NEXT EIGHT UPSTREAM 12.5'W-BEAMS.

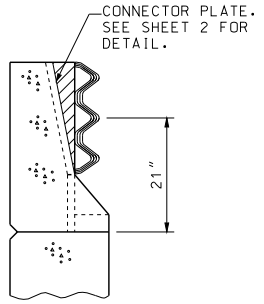

SECTION A-A

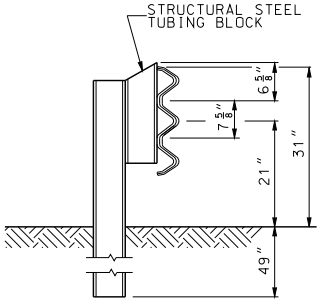

SECTION B-B

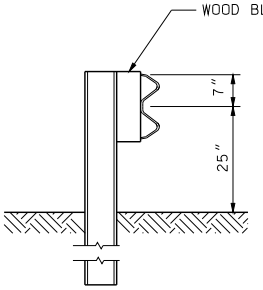

SECTION C-C

IF A SEAL IS PRESENT ON THIS SHEET IT HAS BEEN ELECTRONICALLY SEALED AND DATED.

MISSOURI HIGHWAYS AND TRANSPORTATION COMMISSION
105 WEST CAPITOL
JEFFERSON CITY, MO 65102
1-888-ASK-MODOT (1-888-275-6636)

STATE OF MISSOURI
KATHRYN PHILLIPS HARVEY
NUMBER PE-23751
PROFESSIONAL ENGINEER
THIS SHEET HAS BEEN SIGNED, SEALED AND DATED ELECTRONICALLY.

BRIDGE ANCHOR SECTION

SAFETY BARRIER CURB ON BRIDGE

DATE EFFECTIVE: 08/01/2012
DATE PREPARED: 11/26/2012

606.22T

SHEET NO. 1 OF 5

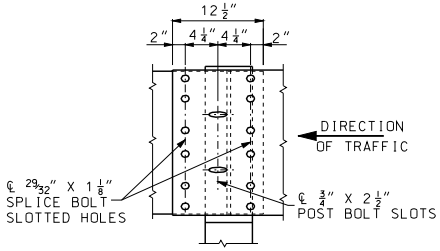

THRIE BEAM RAIL SPLICE AT POST

(1) THE CONTRACTOR MAY, AT HIS OPTION, FURNISH EQUIVALENT SECTIONS FABRICATED FROM MATERIAL MEETING AND IN ACCORDANCE WITH THE REQUIREMENTS OF ASTM A769 GRADE 36 OR 40. THE SECTIONS SHALL BE GALVANIZED AFTER FABRICATION IN ACCORDANCE WITH REQUIREMENTS OF AASHTO M 111.

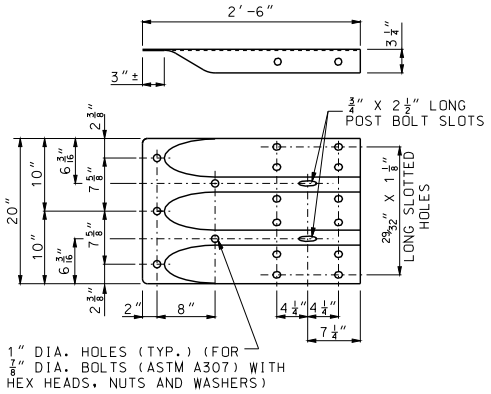

TERMINAL CONNECTOR

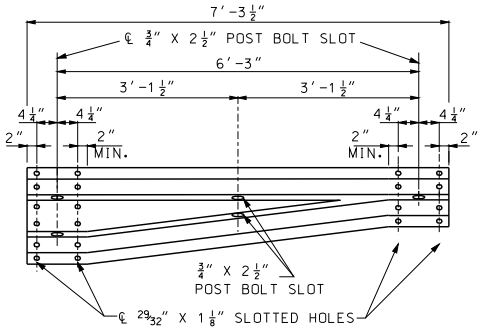

ASYMMETRICAL TRANSITION SECTION

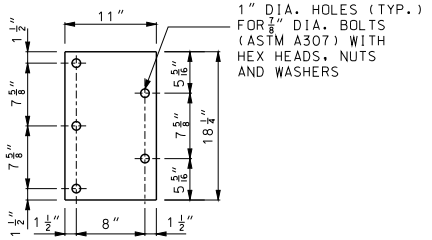

5/8" BEARING PLATE

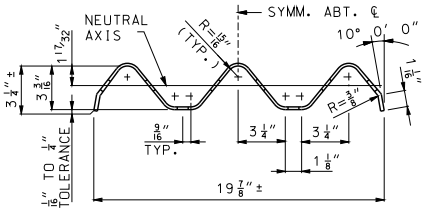

SECTION THROUGH THRIE BEAM RAIL

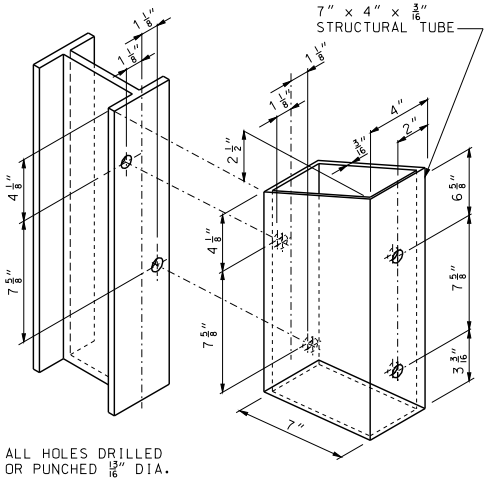

ALL HOLES DRILLED OR PUNCHED 13/16" DIA.

STRUCTURAL STEEL TUBING BLOCK DETAIL

GENERAL NOTES:

DESIGN BASED ON NCHRP REPORT 350 TEST LEVEL 3.

THE THRIE BEAM RAIL, TERMINAL CONNECTOR AND THE TRANSITION SECTION FOR THE BRIDGE ANCHOR SECTION SHALL BE MADE OF STEEL AND SHLL BE 12 GAGE.

FOR PROTECTIVE COATING AND MATERIAL REQUIREMENTS, SEE SECTION 1040 OF THE STANDARD SPECIFICATIONS.

RAIL POSTS SHALL BE SET PERPENDICULAR TO THE ROADWAY PROFILE GRADE AND VERTICALLY IN CROSS SECTION.

WASHERS SHALL BE USED AT ALL POST BOLTS.

STRUCTURAL TUBING BLOCK SHALL BE FABRICATED FROM ASTM A500 BRADE B STEEL AND GALVANIZED.

USE 5/8" BUTTON-HEAD OVAL SHOULDER BOLTS WITH HEX NUTS AT ALL SLOTS (THICKNESS OF HEX NUTS = 3/4" MIN.).

THE BEARING PLATE SHALL BE FABRICATED FROM GRADE A36 STEEL AND GALVANIZED.

ALL LAP SPLICES, INCLUDING END SHOES, SHALL BE MADE IN THE DIRECTION OF TRAFFIC.

SEE STANDARD PLAN 606.00 FOR DETAILS NOT SHOWN.

THE COST OF FURNISHING, FABRICATING AND INSTALLING TRANSITION SECTION, COPLETE IN PLACE, WILL BE PAID FOR AT THE CONTRACT UNIT PRICE PER EACH.

THE COST OF FURNISHING FABRICATING AND INSTALLING BRIDGE ANCHOR SECTION (SAFETY BARRIER CURB), COMPLETE IN PLACE, WILL BE PAID FOR AT THE CONTRACT UNIT PRICE PER EACH.

LOCK SHALL BE OF THE SAME TYPE THROUGHOUT THE PROJECT LIMITS.

FOR DETAILS OF BLOCKS ON STEEL POSTS, SEE STANDARD PLAN 606.00.

IF A SEAL IS PRESENT ON THIS SHEET IT HAS BEEN ELECTRONICALLY SEALED AND DATED.

MISSOURI HIGHWAYS AND TRANSPORTATION COMMISSION
105 WEST CAPITOL
JEFFERSON CITY, MO 65102
1-888-ASK-MODOT (1-888-275-6636)

STATE OF MISSOURI
KATHRYN PHILLIPS HARVEY
NUMBER PE-23751
PROFESSIONAL ENGINEER
THIS SHEET HAS BEEN SIGNED, SEALED AND DATED ELECTRONICALLY.

BRIDGE ANCHOR SECTION

SAFETY BARRIER CURB ON BRIDGE

DATE EFFECTIVE:	08/01/2007	606.22T	SHEET NO.
DATE PREPARED:	11/26/2012		2 OF 5

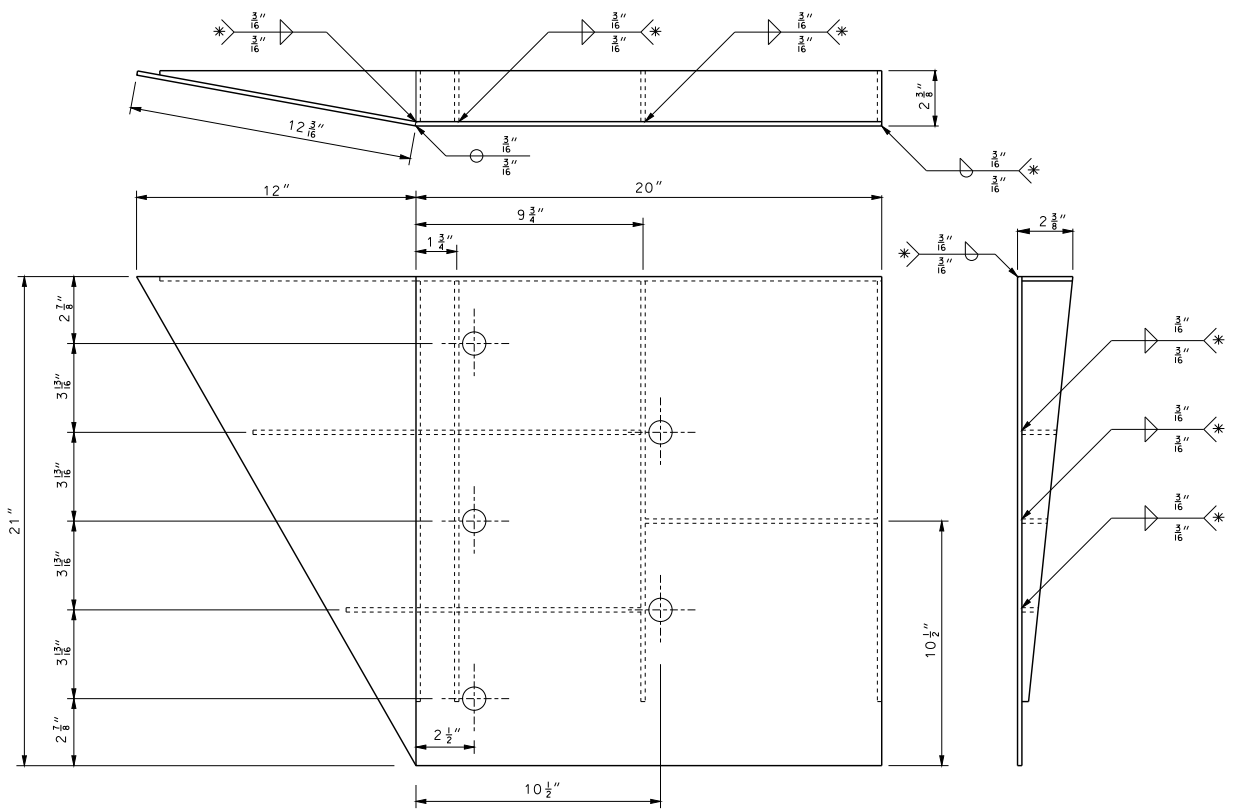

WELDING INSTRUCTION

✱ ALL FILLET WELDS SHALL BE 1" LONG SPACED AT 2".

GENERAL NOTES:

COVER PLATE PANELS ARE 4. 3/16" THICK.

ALL STIFFENERS ARE 1/4" THICK.

CONNECTOR PLATE SHALL BE FABRICATED FROM ASTM GRADE A36 STEEL AND GALVANIZED.

FOR GALVANIZED REQUIREMENTS, SEE SECTION 1040 OF THE STANDARD SPECIFICATIONS.

ALL HOLE DIAMETERS SHALL BE 1".

MISSOURI HIGHWAYS AND TRANSPORTATION COMMISSION
105 WEST CAPITOL
JEFFERSON CITY, MO 65102
1-888-ASK-MODOT (1-888-275-6636)

STATE OF MISSOURI
KATHRYN PHILLIPS HARVEY
NUMBER PE-2375T
PROFESSIONAL ENGINEER
THIS SHEET HAS BEEN SIGNED, SEALED AND DATED ELECTRONICALLY.

BRIDGE ANCHOR SECTION
SAFETY BARRIER CURB ON BRIDGE
(CONNECTOR PLATE DETAIL)

DATE EFFECTIVE: 08/01/2012
DATE PREPARED: 7/19/2012

606.22T

SHEET NO. 3 OF 5

IF A SEAL IS PRESENT ON THIS SHEET IT HAS BEEN ELECTRONICALLY SEALED AND DATED.

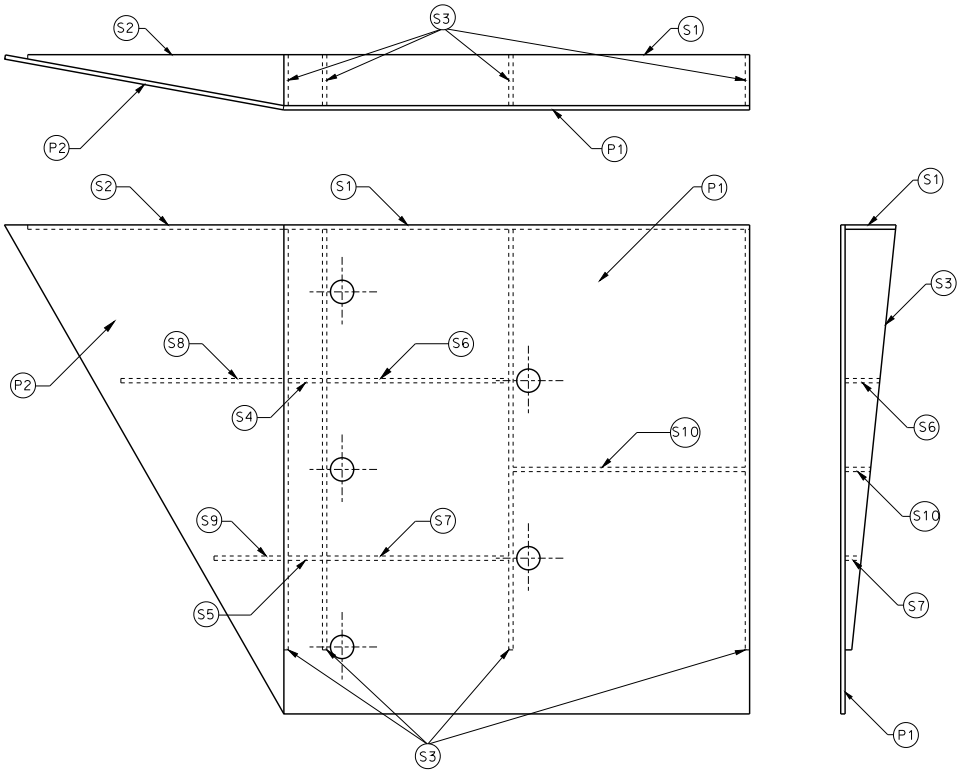

PLATE AND STIFFENER IDENTIFICATION

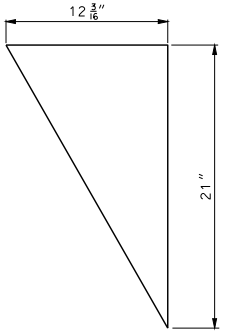

(P2) COVER PLATE #2

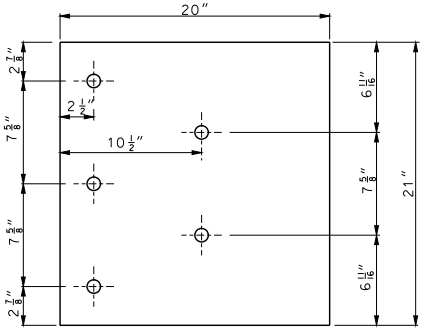

(P1) COVER PLATE #1

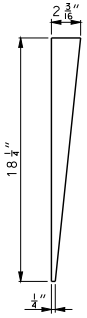

(S3) STIFFENER #3: 4 EACH

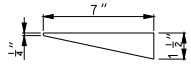

(S8) STIFFENER #8: 1 EACH

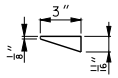

(S9) STIFFENER #9: 1 EACH

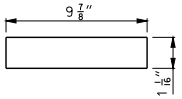

(S10) STIFFENER #10: 1 EACH

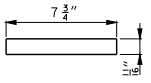

(S7) STIFFENER #7: 1 EACH

(S5) STIFFENER #5: 1 EACH

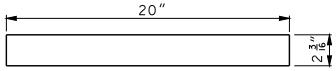

(S1) STIFFENER #1: 1 EACH

(S4) STIFFENER #4: 1 EACH

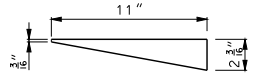

(S2) STIFFENER #2: 1 EACH

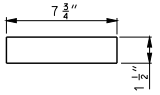

(S6) STIFFENER #6: 1 EACH

IF A SEAL IS PRESENT ON THIS SHEET IT HAS BEEN ELECTRONICALLY SEALED AND DATED.

MISSOURI HIGHWAYS AND TRANSPORTATION COMMISSION
105 WEST CAPITOL
JEFFERSON CITY, MO 65102
1-888-ASK-MODOT (1-888-275-6636)

STATE OF MISSOURI
KATHRYN PHILLIPS HARVEY
NUMBER PE-23751
PROFESSIONAL ENGINEER
THIS SHEET HAS BEEN SIGNED, SEALED AND DATED ELECTRONICALLY.

BRIDGE ANCHOR SECTION

SAFETY BARRIER CURB ON BRIDGE
(CONNECTOR PLATE DETAIL)

DATE EFFECTIVE:	08/01/2012	606.22T	SHEET NO.
DATE PREPARED:	7/19/2012		4 OF 5

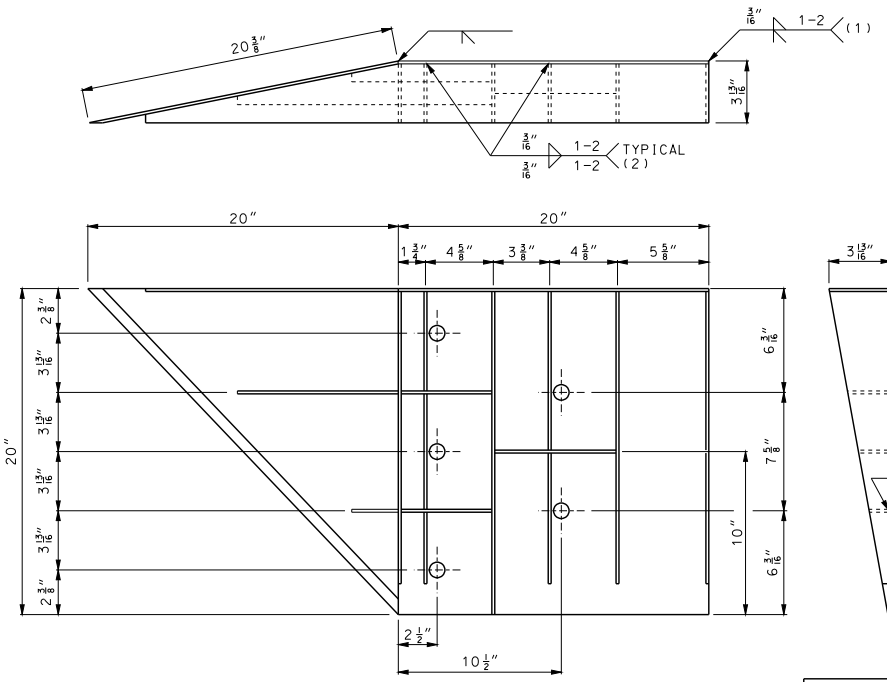

WELDING INSTRUCTION

(1) STIFFENERS LOCATED AT THE OUTSIDE EDGES OF THE COVER PLATES SHALL BE WELDED AS FOLLOWS:
SINGLE BEVEL GROOVE WELD ON EXTERNAL SIDES AND $\frac{3}{16}$" FILLET WELD BY 1" LONG SPACED AT 2" ON INTERNAL SIDES.

(2) STEFFENERS LOCATED ON THE INSIDE OF THE COVER PLATE SHALL BE WELDED AS FOLLOWS:
$\frac{3}{16}$" FILLET WELD BY 1" LONG SPACED AT 2".

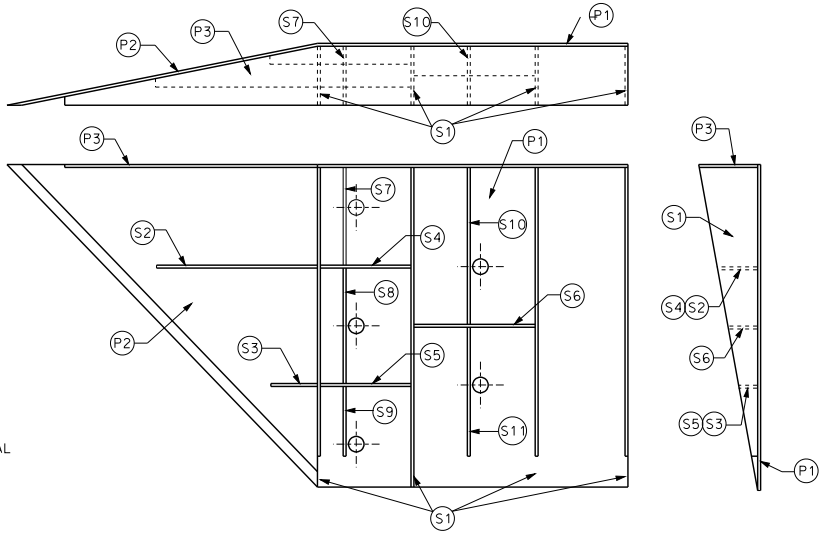

PLATE AND STIFFENER IDENTIFICATION

CONNECTOR PLATE DIMENSION (PER ASSEMBLY)

PLATE	QUANTITY	SHAPE	SIZE (A x B x C x D)	THICKNESS
P1	1	B A	20" x 20"	$\frac{3}{16}$"
P2	1	B A C	20" x 20" x 28 9/16"	$\frac{3}{16}$"
P3	1	B A C D	39" x 3 5/8" x 20" x 19 5/16"	$\frac{3}{16}$"
S1	4	B A C	18 7/16" x 3 5/8" x 18 3/4"	$\frac{1}{4}$"
S2	1	B A C D	10 1/4" x 2 7/16" x 10 3/8" x 1/2"	$\frac{1}{4}$"
S3	1	B A C D	3" x 1 1/16" x 3 1/8" x 1/2"	$\frac{1}{4}$"
S4	1	B A	6 1/8" x 2 7/16"	$\frac{1}{4}$"
S5	1	B A	6 1/8" x 1 1/16"	$\frac{1}{4}$"
S6	1	B A	7 3/4" x 1 3/4"	$\frac{1}{4}$"
S7	1	A D B C	2 9/16" x 6" x 3 5/8" x 5 7/8"	$\frac{1}{4}$"
S8	1	A D B C	1 5/32" x 7 1/2" x 2 1/2" x 7 3/8"	$\frac{1}{4}$"
S9	1	C A B	6 1/16" x 6 3/16" x 1 3/32"	$\frac{1}{4}$"
S10	1	A D B C	1 7/8" x 9 7/8" x 3 5/8" x 9 11/16"	$\frac{1}{4}$"
S11	1	C A B	8 1/2" x 8 3/4" x 1 13/16"	$\frac{1}{4}$"

GENERAL NOTES:

COVER PLATE PANELS ARE $\frac{3}{16}$" THICK.

ALL STIFFENERS ARE $\frac{1}{4}$" THICK.

CONNECTOR PLATE SHALL BE FABRICATED FROM ASTM GRADE A36 STEEL AND GALVANIZED.

FOR GALVANIZED REQUIREMENTS, SEE SECTION 1040 OF THE STANDARD SPECIFICATIONS.

ALL HOLE DIAMETERS SHALL BE 1".

MISSOURI HIGHWAYS AND TRANSPORTATION COMMISSION
105 WEST CAPITOL
JEFFERSON CITY, MO 65102
1-888-ASK-MODOT (1-888-275-6636)

STATE OF MISSOURI
KATHRYN PHILLIPS HARVEY
NUMBER PE-23751
PROFESSIONAL ENGINEER
THIS SHEET HAS BEEN SIGNED, SEALED AND DATED ELECTRONICALLY.

BRIDGE ANCHOR SECTION

SAFETY BARRIER CURB ON BRIDGE
(CONNECTOR PLATE DETAIL)
SINGLE SLOPE BARRIERS

DATE EFFECTIVE: 08/01/2012
DATE PREPARED: 7/19/2012

606.22T

SHEET NO. 5 OF 5

IF A SEAL IS PRESENT ON THIS SHEET IT HAS BEEN ELECTRONICALLY SEALED AND DATED.

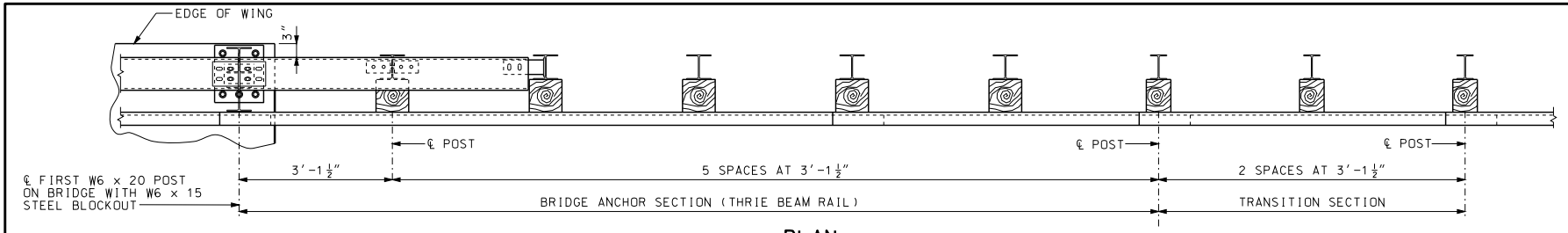

PLAN

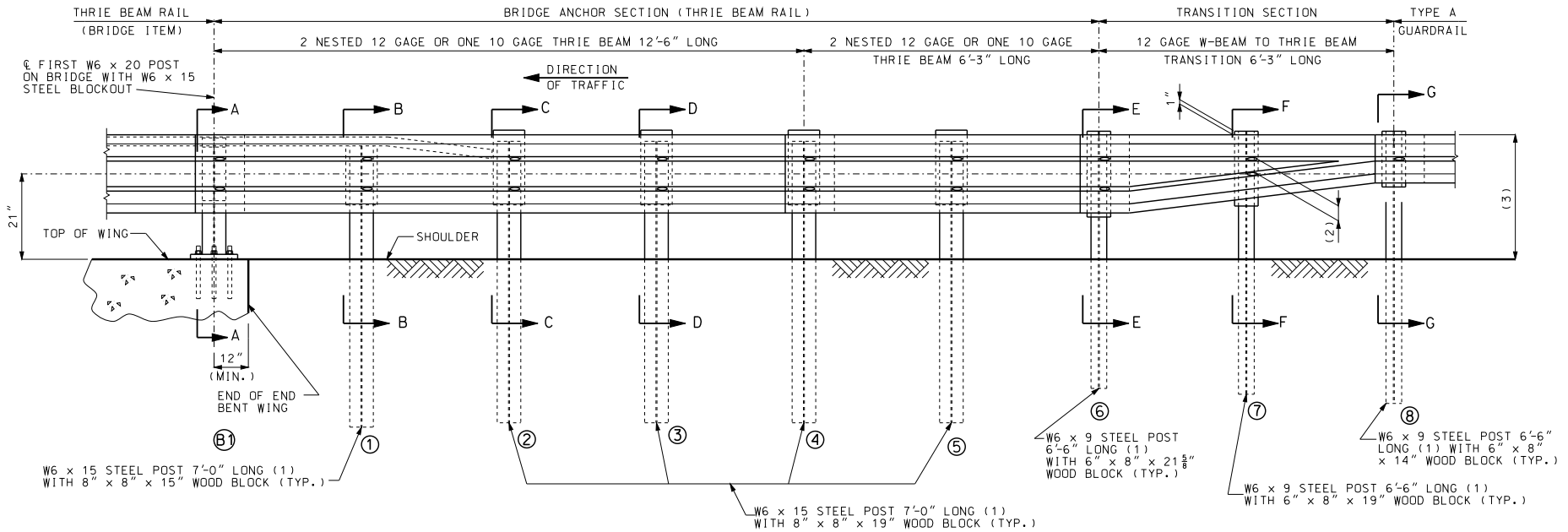

PART SECTION THROUGH SLAB AT END OF WING

NOTES:

FOR GENERAL NOTES, SEE SHEET 2 OF 5.

FOR POST DETAILS AND SECTION VIEWS, SEE SHEET 2 AND 3 OF 5.

(1) AT CONTRACTOR'S OPTION, EQUIVALENT SECTIONS MAY BE FABRICATED FROM MATERIAL MEETING AND IN ACCORDANCE WITH THE REQUIREMENTS OF ASTM A769 GRADE 36 OR 40. THE SECTIONS SHALL BE GALVANIZED AFTER FABRICATION IN ACCORDANCE WITH THE REQUIREMENTS OF AASHTO 111.

(2) VERIFY BY RAIL TRANSITION PRODUCER.

(3) TRANSITION FROM 31" TO 29" HEIGHT OVER NEXT EIGHT UPSTREAM 12.5' W-BEAMS.

MISSOURI HIGHWAYS AND TRANSPORTATION COMMISSION
105 WEST CAPITOL
JEFFERSON CITY, MO 65102
1-888-ASK-MODOT (1-888-275-6636)

STATE OF MISSOURI
KATHRYN PHILLIPS HARVEY
NUMBER PE-23751
PROFESSIONAL ENGINEER
THIS SHEET HAS BEEN SIGNED, SEALED AND DATED ELECTRONICALLY.

BRIDGE ANCHOR SECTION

(THRIE BEAM RAIL ON BRIDGE)

DATE EFFECTIVE: 08/01/2012
DATE PREPARED: 11/26/2012

606.231

SHEET NO. 1 OF 5

IF A SEAL IS PRESENT ON THIS SHEET IT HAS BEEN ELECTRONICALLY SEALED AND DATED.

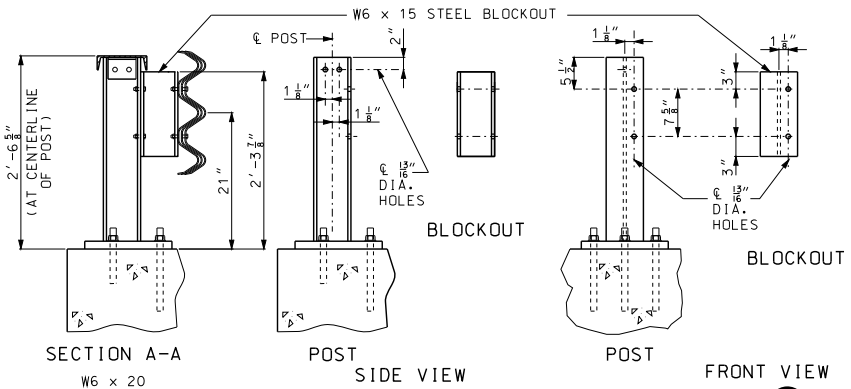

STEEL POST AND STEEL BLOCKOUT (B1)

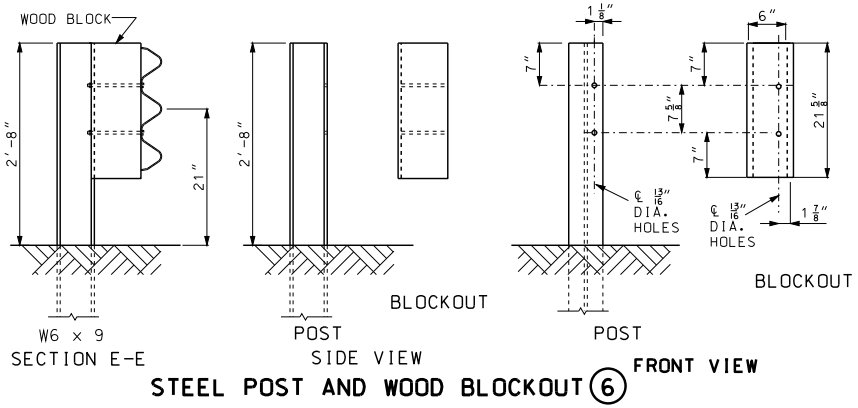

STEEL POST AND WOOD BLOCKOUT (6)

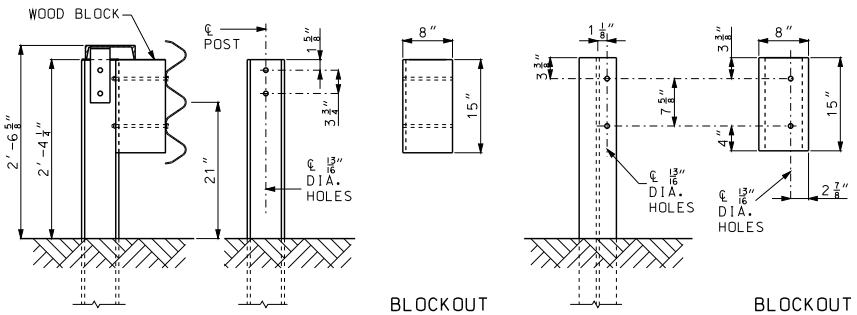

STEEL POST AND WOOD BLOCKOUT (1)

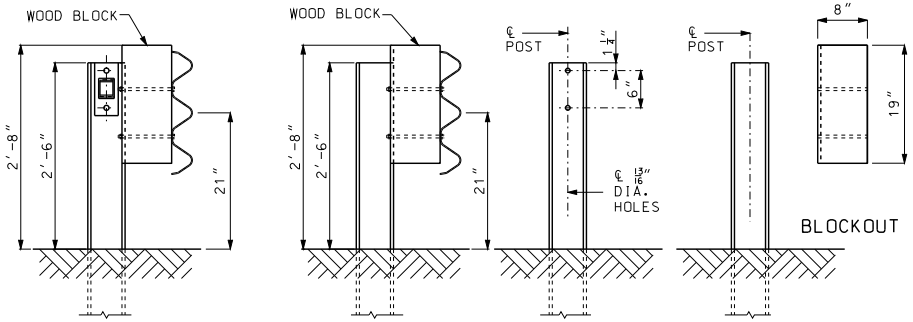

STEEL POST AND WOOD BLOCKOUT (2) THROUGH (5)

(2) VERIFY BY RAIL TRANSITION PRODUCER.

GENERAL NOTES:

DESIGN BASED UPON NCHRP REPORT 350 TEST LEVEL 3 (TL-3).

THE THRIE BEAM RAIL FOR THE BRIDGE ANCHOR SECTION SHALL BE 12 GAGE OR 10 GAGE AT THE CONTRACTOR'S OPTION, AND THE TRANSITION SECTION SHALL BE 12 GAGE.

FABRICATED STRUCTURAL STEEL SHALL BE ASTM A709 GRADE 36.

FOR PROTECTIVE COATING AND MATERIAL REQUIREMENTS, SEE SECTION 1040 OF THE STANDARD SPECIFICATIONS.

RAIL POSTS SHALL BE SET PERPENDICULAR TO THE ROADWAY PROFILE GRADE AND VERTICALLY IN CROSS SECTION.

WASHERS SHALL BE USED AT ALL POST BOLTS.

USE $\frac{5}{8}$" BUTTON-HEAD, OVAL SHOULDER BOLTS WITH HEX NUTS (THICKNESS OF HEX NUTS = $\frac{5}{8}$" MIN.) AT ALL SLOTS.

ALL LAP SPLICES SHALL BE MADE IN THE DIRECTION OF TRAFFIC.

THE COST OF FURNISHING, FABRICATING AND INSTALLING TRANSITION SECTION, COMPLETE-IN-PLACE, SHALL BE PAID FOR AT THE CONTRACT UNIT PRICE PER EACH.

THE COST OF FURNISHING, FABRICATING AND INSTALLING BRIDGE ANCHOR SECTION (THRIE BEAM), COMPLETE-IN-PLACE, SHALL BE PAID FOR AT THE CONTRACT UNIT PRICE PER EACH.

FOR DETAILS NOT SHOWN, SEE BRIDGE THRIE BEAM RAIL SHEET.

MISSOURI HIGHWAYS AND TRANSPORTATION COMMISSION
105 WEST CAPITOL
JEFFERSON CITY, MO 65102
1-888-ASK-MODOT (1-888-275-6636)

STATE OF MISSOURI
KATHRYN PHILLIPS HARVEY
NUMBER PE-23751
PROFESSIONAL ENGINEER
THIS SHEET HAS BEEN SIGNED, SEALED AND DATED ELECTRONICALLY.

BRIDGE ANCHOR SECTION

(THRIE BEAM RAIL ON BRIDGE)

DATE EFFECTIVE:	08/01/2012	606.231	SHEET NO. 2 OF 5
DATE PREPARED:	7/19/2012		

IF A SEAL IS PRESENT ON THIS SHEET IT HAS BEEN ELECTRONICALLY SEALED AND DATED.

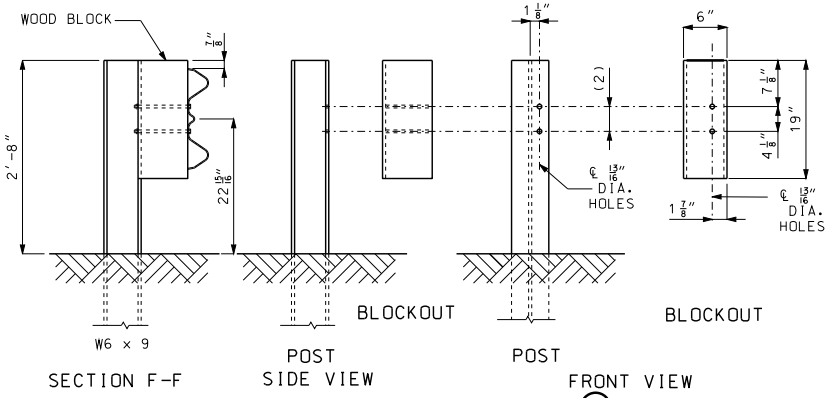

STEEL POST AND WOOD BLOCKOUT ⑦

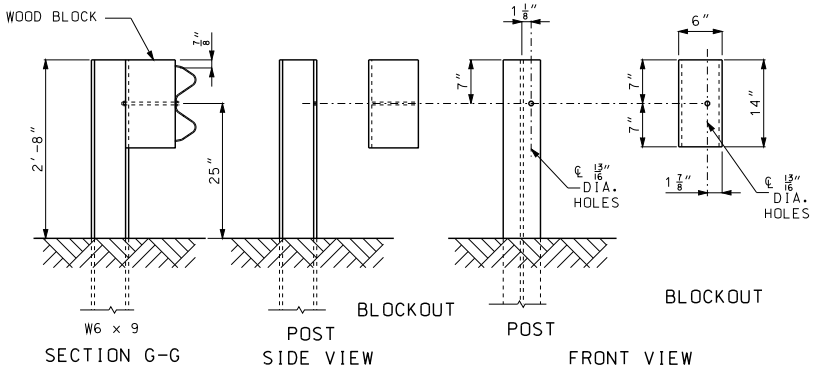

STEEL POST AND WOOD BLOCKOUT ⑧

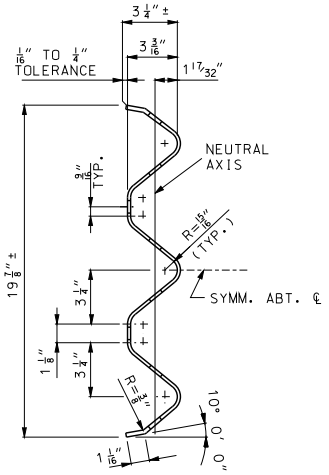

SECTION H-H
THROUGH THRIE BEAM RAIL

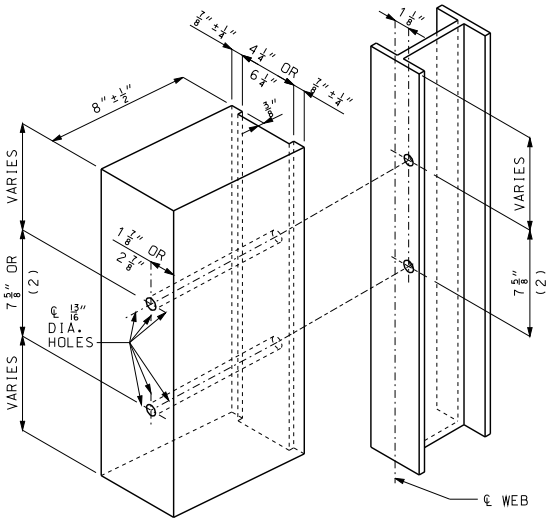

POST ⑦ - (2) VERIFY BY RAIL TRANSITION PRODUCER (SEE FRONT SHEET)
POST ⑧ - ONLY 1 HOLE REQUIRED
ALL HOLES 13/16" DIAMETER EXCEPT AS NOTED

HOLE PUNCHING DETAIL
FOR STEEL POST & WOOD BLOCKS (6" AND 8")

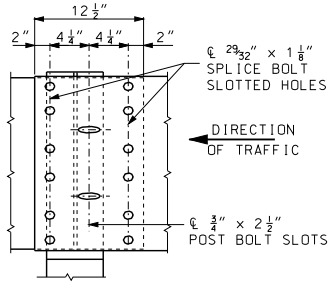

THRIE BEAM RAIL SPLICE AT POST

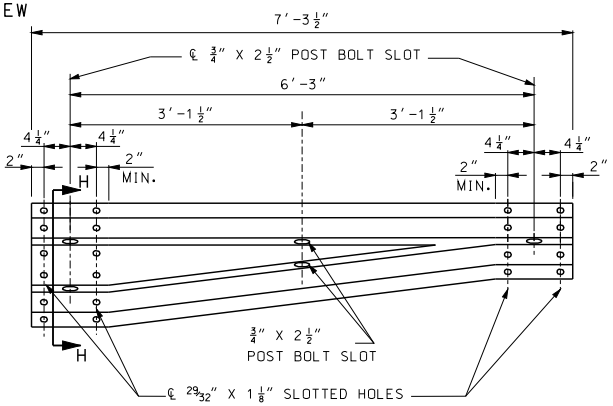

ASYMMETRICAL TRANSITION SECTION

IF A SEAL IS PRESENT ON THIS SHEET IT HAS BEEN ELECTRONICALLY SEALED AND DATED.

MISSOURI HIGHWAYS AND TRANSPORTATION COMMISSION
105 WEST CAPITOL
JEFFERSON CITY, MO 65102
1-888-ASK-MODOT (1-888-275-6636)

STATE OF MISSOURI
KATHRYN PHILLIPS HARVEY
NUMBER PE-23751
PROFESSIONAL ENGINEER
THIS SHEET HAS BEEN SIGNED, SEALED AND DATED ELECTRONICALLY.

BRIDGE ANCHOR SECTION
(THRIE BEAM RAIL ON BRIDGE)

DATE EFFECTIVE: 08/01/2012
DATE PREPARED: 11/26/2012

606.231

SHEET NO. 3 OF 5

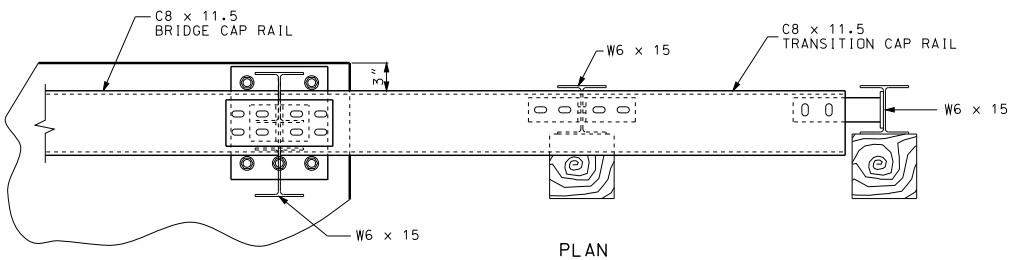

PLAN

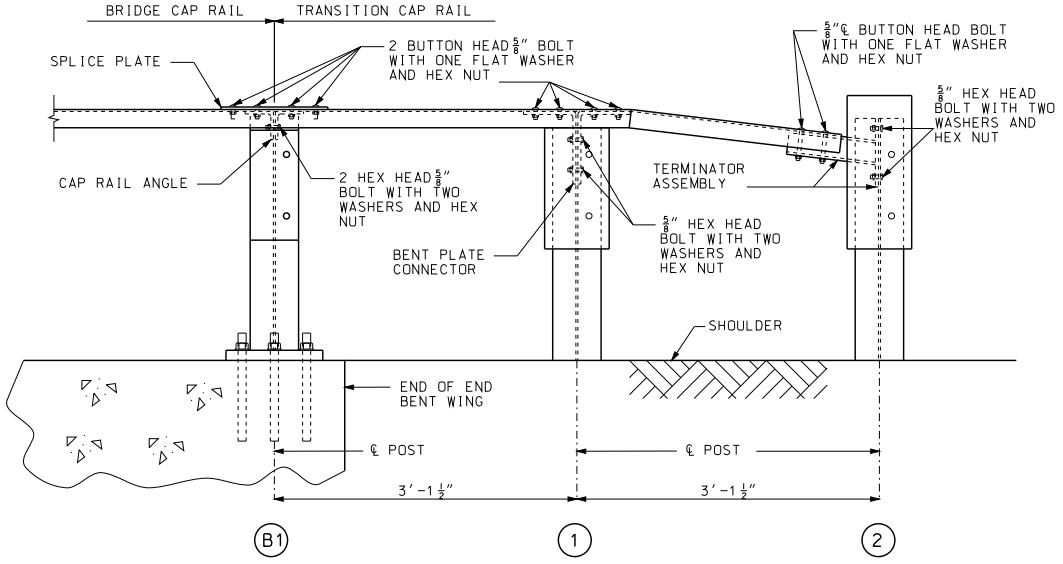

ELEVATION
(THRIE BEAM RAIL NOT SHOWN)

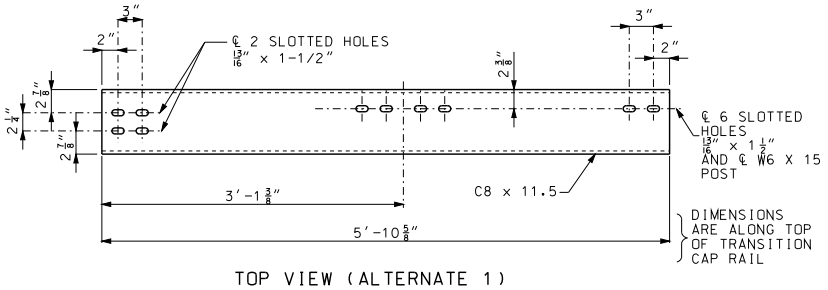

TOP VIEW (ALTERNATE 1)

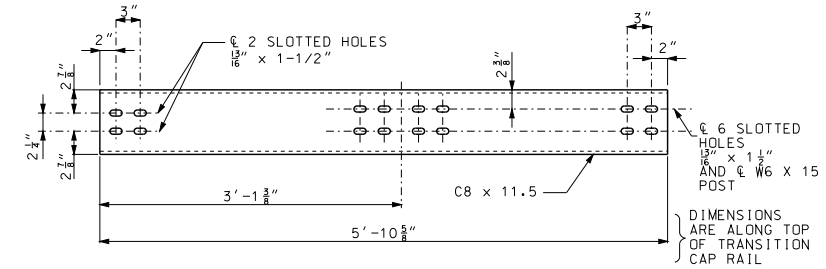

TOP VIEW (ALTERNATE 2)

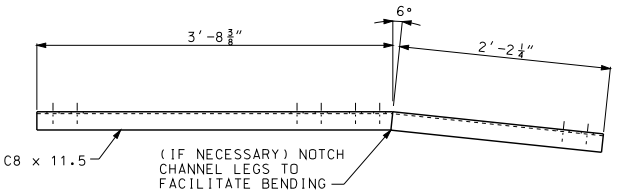

ELEVATION
TRANSITION CAP RAIL

GENERAL NOTES:

IF A SEAL IS PRESENT ON THIS SHEET IT HAS BEEN ELECTRONICALLY SEALED AND DATED.

MISSOURI HIGHWAYS AND TRANSPORTATION COMMISSION
105 WEST CAPITOL
JEFFERSON CITY, MO 65102
1-888-ASK-MODOT (1-888-275-6636)

STATE OF MISSOURI
KATHRYN PHILLIPS HARVEY
NUMBER PE-23751
PROFESSIONAL ENGINEER
THIS SHEET HAS BEEN SIGNED, SEALED AND DATED ELECTRONICALLY.

BRIDGE ANCHOR SECTION
(THRIE BEAM RAIL ON BRIDGE)

DATE EFFECTIVE: 08/01/2012
DATE PREPARED: 7/19/2012

606.231

SHEET NO. 4 OF 5

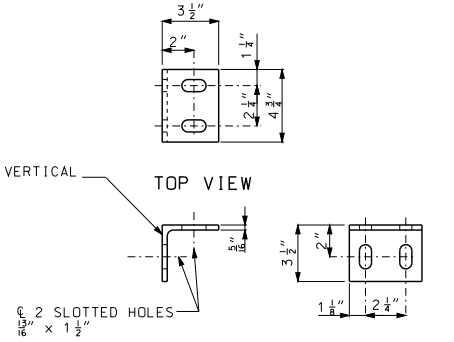

CAP RAIL ANGLE

∠ 3 1/2" × 3 1/2" × 5/16"

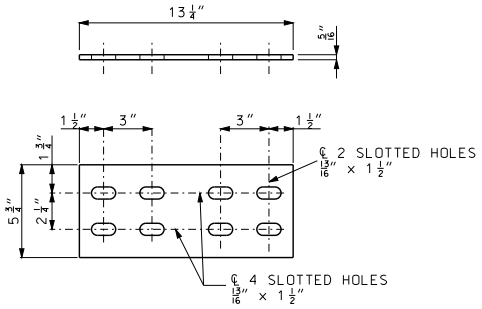

SPLICE PLATE

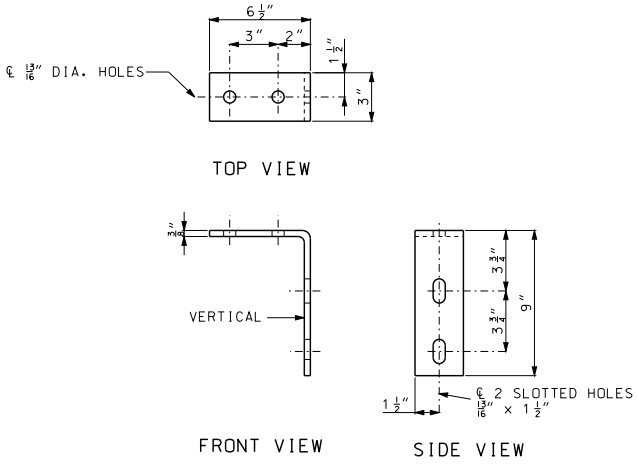

BENT PLATE CONNECTOR

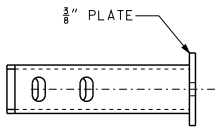

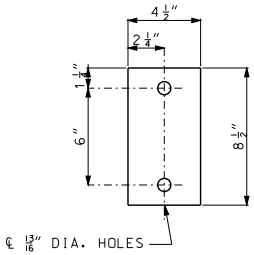

3/8" PLATE

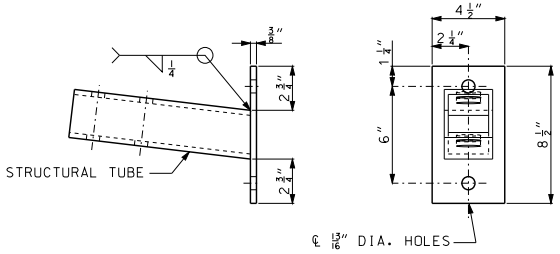

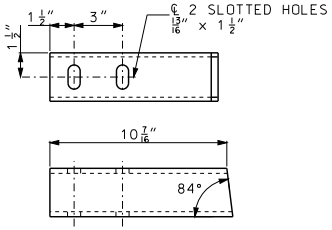

STRUCTURAL TUBE
TS 3" × 3" × 5/16"

TERMINATOR ASSEMBLY

IF A SEAL IS PRESENT ON THIS SHEET IT HAS BEEN ELECTRONICALLY SEALED AND DATED.

MISSOURI HIGHWAYS AND TRANSPORTATION COMMISSION
105 WEST CAPITOL
JEFFERSON CITY, MO 65102
1-888-ASK-MODOT (1-888-275-6636)

STATE OF MISSOURI
KATHRYN PHILLIPS HARVEY
NUMBER PE-23751
PROFESSIONAL ENGINEER
THIS SHEET HAS BEEN SIGNED, SEALED AND DATED ELECTRONICALLY.

BRIDGE ANCHOR SECTION

(THRIE BEAM RAIL ON BRIDGE)

DATE EFFECTIVE: 08/01/2012
DATE PREPARED: 7/19/2012

606.231

SHEET NO. 5 OF 5

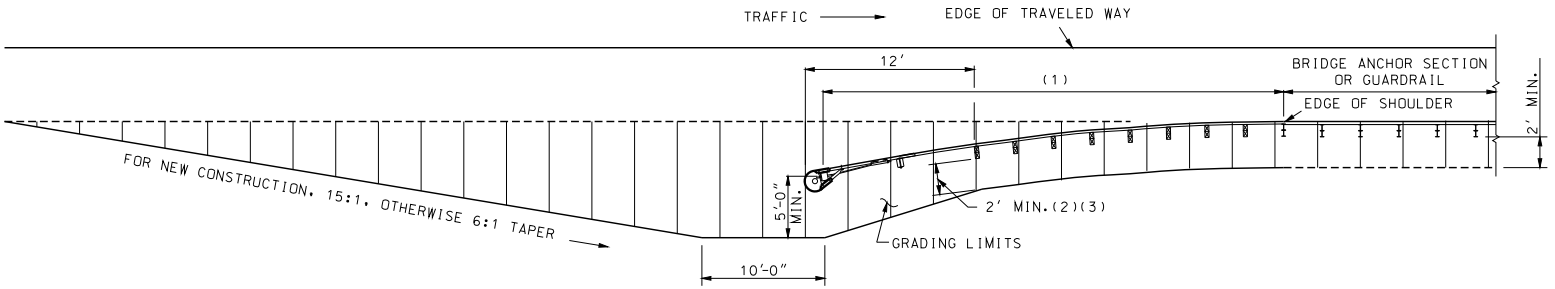

GRADING LIMITS FOR TYPE A FLARED CRASHWORTHY END TERMINAL

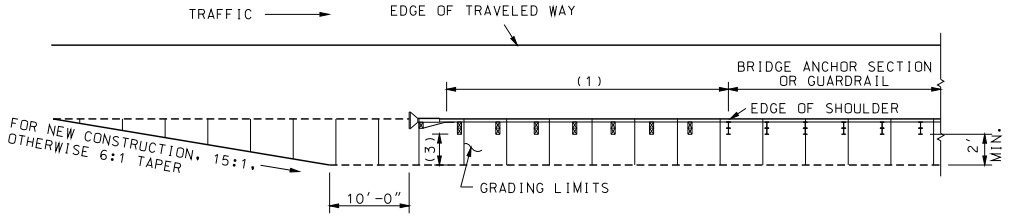

GRADING LIMITS FOR TYPE A NON-FLARED CRASHWORTHY END TERMINAL

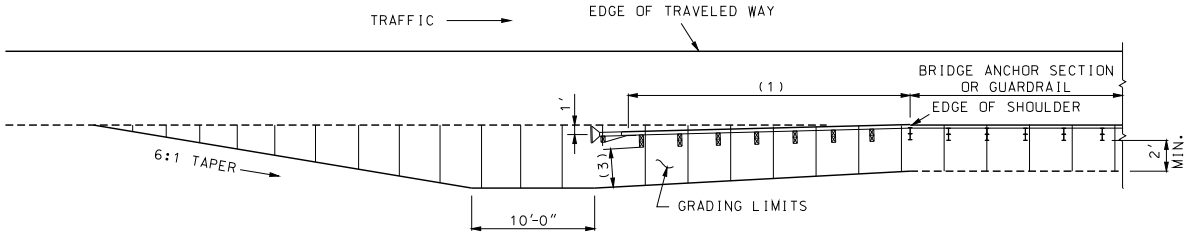

GRADING LIMITS FOR TYPE A NON-FLARED OFFSET CRASHWORTHY END TERMINAL

(1) APPROVED TYPE A CRASHWORTHY END TERMINAL.
(2) THE SLOPE SHOULD BREAK BEHIND THIRD POST.
(3) AS PER MANUFACTURER'S SPECIFICATIONS, 2' MINIMUM. NO DIRECT PAY.

GENERAL NOTES:

THE CONTRACTOR SHALL PROVIDE THE ENGINEER WITH APPROVED SHOP DRAWINGS OF THE APPROVED CRASH-WORTHY END TERMINAL.

END ANCHORS SHALL BE INSTALLED ON ENDS OF GUARDRAIL RUNS WHERE CRASHWORTHY END TERMINAL IS NOT REQUIRED.

MISSOURI HIGHWAYS AND TRANSPORTATION COMMISSION
105 WEST CAPITOL
JEFFERSON CITY, MO 65102
1-888-ASK-MODOT (1-888-275-6636)

STATE OF MISSOURI
KATHRYN PHILLIPS HARVEY
NUMBER PE-23751
PROFESSIONAL ENGINEER
THIS SHEET HAS BEEN SIGNED, SEALED AND DATED ELECTRONICALLY.

GUARDRAIL
TERMINAL ENDS CRASHWORTHY

DATE EFFECTIVE: 08/01/2012
DATE PREPARED: 7/19/2012

606.30F

SHEET NO. 1 OF 9

IF A SEAL IS PRESENT ON THIS SHEET IT HAS BEEN ELECTRONICALLY SEALED AND DATED.

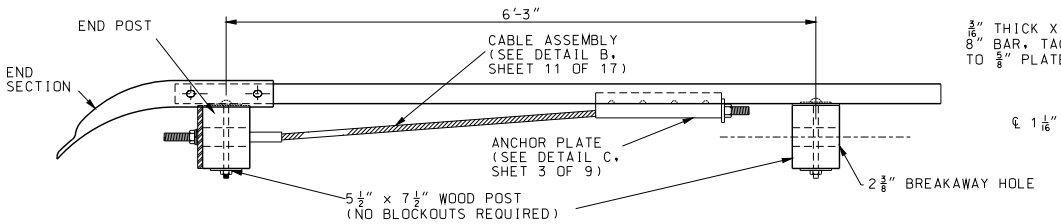

NOTE: SEE SHEET 7 OF 17 FOR DETAILS OF END SECTION.

PLAN

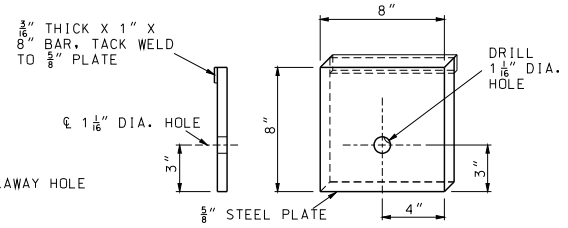

DETAIL OF
STEEL BEARING PLATE

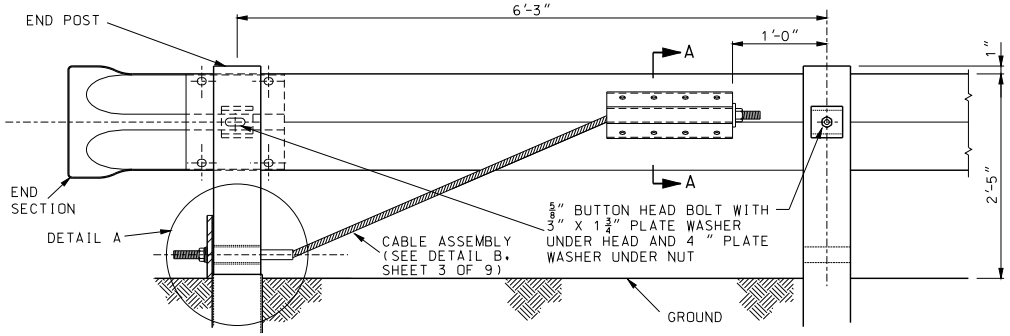

POST 1 ELEVATION (BACK SIDE) POST 2

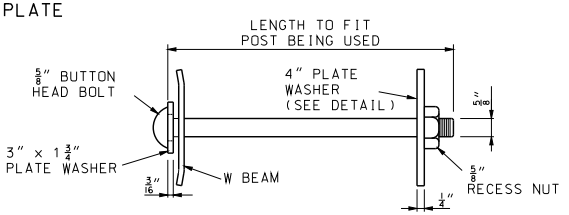

POST BOLT ASSEMBLY

END ANCHOR DETAILS

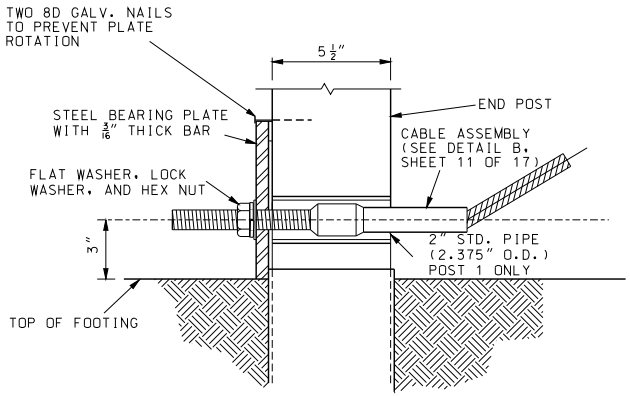

DETAIL A
(END POST DETAIL)

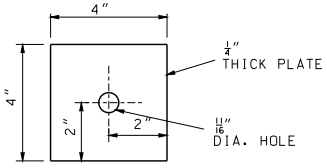

4" PLATE WASHER

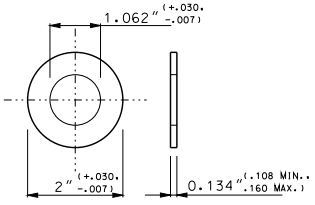

TYPE A WASHER

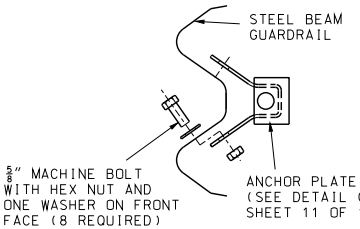

SECTION A-A

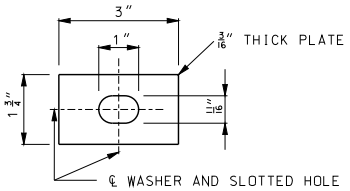

3" x 1 3/4"
PLATE WASHER

GENERAL NOTES:

END ANCHOR DETAILS SHOWN SHALL BE USED ONLY ON DOWN STREAM ENDS OF GUARDRAIL WHEN AN END ANCHOR IS REQUIRED.

THE DETAILS SHOWN ARE FOR AN END ANCHORAGE SYSTEM FOR GUARDRAIL. GUARDRAIL AND POSTS ARE PAID FOR SEPARATELY.

CABLE ASSEMBLY AND ANCHOR PLATE SHALL BE SUBJECT TO APPROVAL BY THE ENGINEER AND SHALL HAVE A MINIMUM BREAKING STRENGTH OF 20 TONS.

ALL FITTINGS AND HARDWARE REQUIRED SHALL BE GALVANIZED AFTER FABRICATION, SEE SECTION 1040 STANDARD SPECIFICATION.

WOOD POSTS 1 AND 2 SHALL BE 5 1/2" X 7 1/2".

SEE SHEET 4 FOR WOOD POST DETAILS.

MISSOURI HIGHWAYS AND TRANSPORTATION COMMISSION
105 WEST CAPITOL
JEFFERSON CITY, MO 65102
1-888-ASK-MODOT (1-888-275-6636)

STATE OF MISSOURI
KATHRYN PHILLIPS HARVEY
NUMBER PE-2007051
PROFESSIONAL ENGINEER
THIS SHEET HAS BEEN SIGNED, SEALED AND DATED ELECTRONICALLY.

GUARDRAIL

TERMINAL ANCHOR ENDS

DATE EFFECTIVE: 08/01/2012
DATE PREPARED: 7/19/2012

606.30F

SHEET NO. 2 OF 9

IF A SEAL IS PRESENT ON THIS SHEET IT HAS BEEN ELECTRONICALLY SEALED AND DATED.

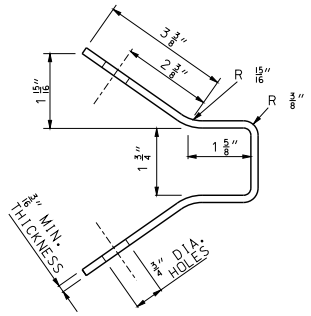

FABRICATION DETAIL

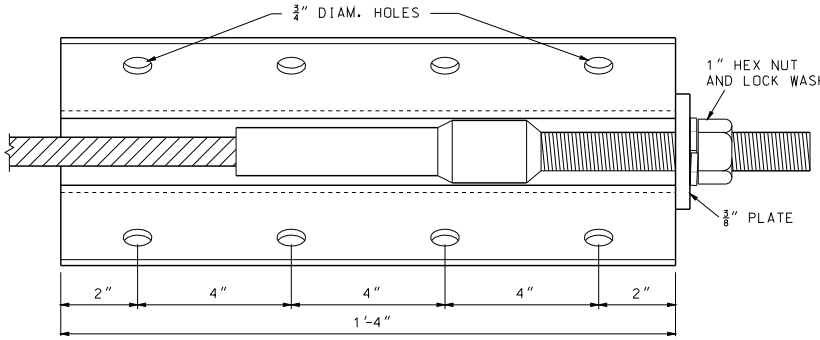

DETAIL C
ASSEMBLED VIEW
(ANCHOR PLATE)

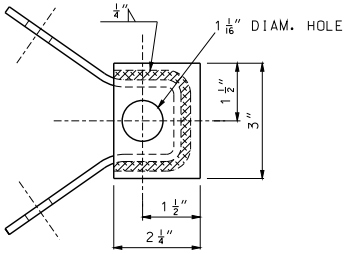

END VIEW

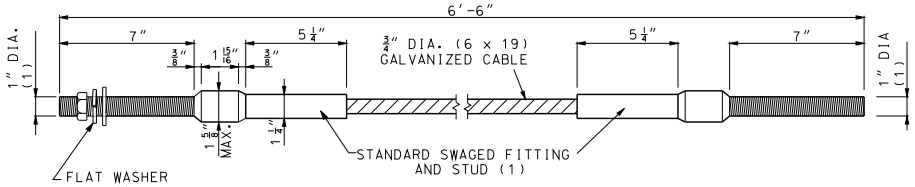

DETAIL B
(CABLE ASSEMBLY)

(1) STUD, THREADED ENTIRE LENGTH.
(2) 6'-3" SPACING FOR TYPE A OR B GUARDRAIL; 3'-1 1/2" SPACING FOR TYPE E GUARDRAIL.
(3) 27" MINIMUM BUT LESS THAN 4' FOR TYPE E GUARDRAIL; 4' MINIMUM FOR TYPE A GUARDRAIL.

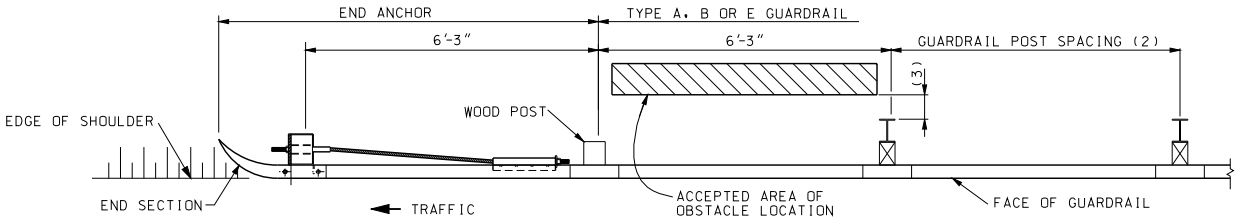

PLAN

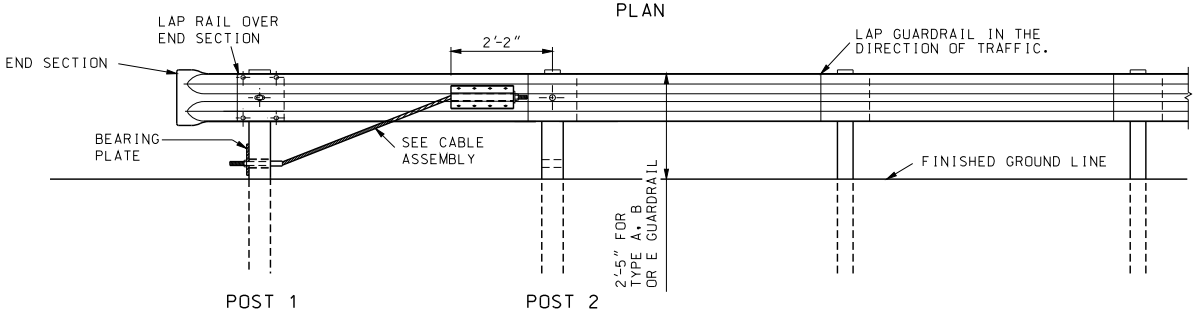

ELEVATION
END ANCHOR

IF A SEAL IS PRESENT ON THIS SHEET IT HAS BEEN ELECTRONICALLY SEALED AND DATED.

MISSOURI HIGHWAYS AND TRANSPORTATION COMMISSION
105 WEST CAPITOL
JEFFERSON CITY, MO 65102
1-888-ASK-MODOT (1-888-275-6636)

STATE OF MISSOURI
KATHRYN PHILLIPS HARVEY
NUMBER PE-23751
PROFESSIONAL ENGINEER
THIS SHEET HAS BEEN SIGNED, SEALED AND DATED ELECTRONICALLY.

GUARDRAIL

TERMINAL ANCHOR ENDS

DATE EFFECTIVE: 08/01/2012
DATE PREPARED: 7/19/2012

606.30F

SHEET NO.
3 OF 9

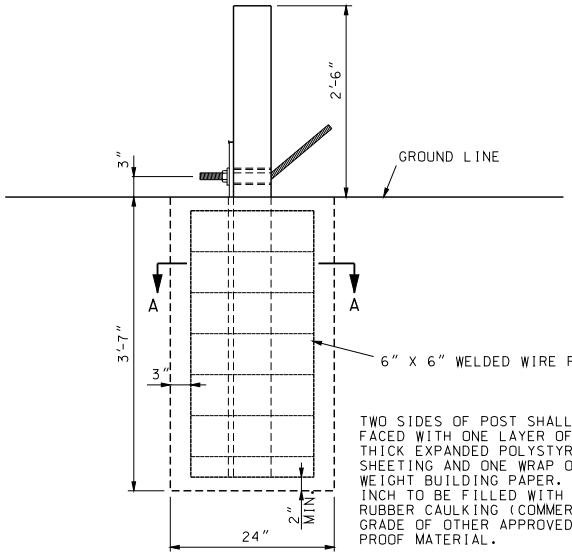

POST 1

CONCRETE FOUNDATION FOR END ANCHORS

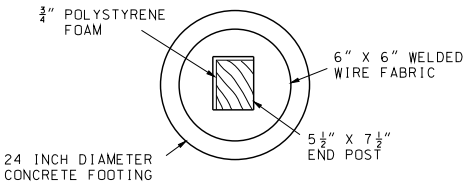

SECTION A-A
EXPANDED POLYSTYRENE FOAM
INSTALLATION DETAIL

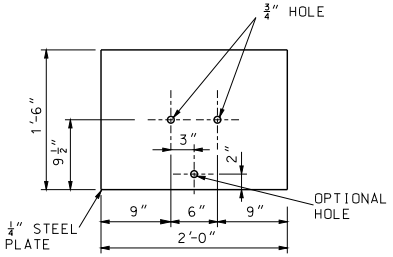

SOIL PLATE

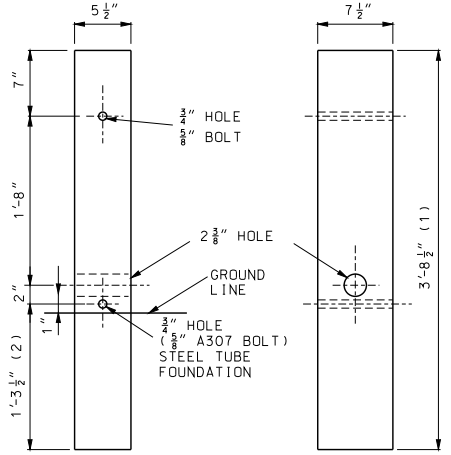

WOOD BREAKAWAY POST

SEE SECTION 1050

(1) 5'-11½" FOR CONCRETE FOUNDATION ALTERNATE.

(2) 3'-8½" FOR CONCRETE FOUNDATION ALTERNATE.

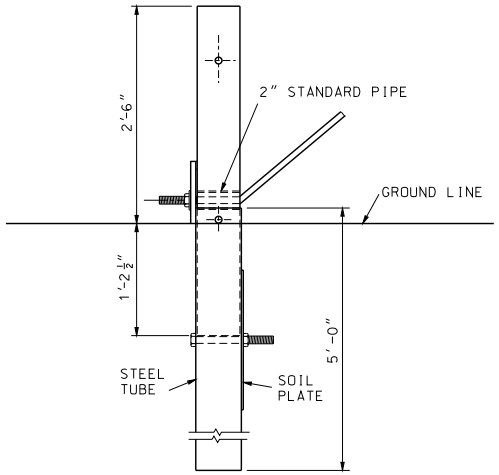

POST 1

STEEL TUBE FOUNDATION FOR END ANCHORS

BOLTS AND NUTS SHALL BE GALVANIZED IN ACCORDANCE WITH THE REQUIREMENTS OF AASHTO M232, OR THEY MAY BE MECHANICALLY GALVANIZED IN ACCORDANCE WITH AASHTO M232 CLASS C.

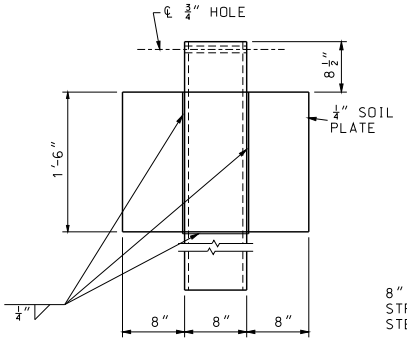

SHOP WELDED SOIL PLATE CONNECTION

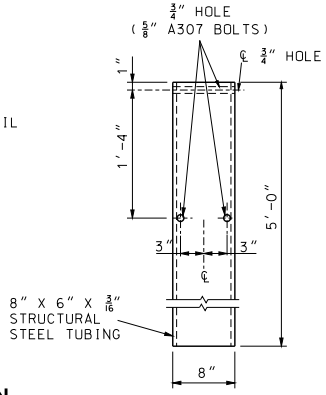

STEEL TUBE

GENERAL NOTES:

THE CONTRACTOR HAS THE OPTION TO INSTALL WOOD POST 1 AND 2 IN STEEL TUBE OR CONCRETE FOUNDATION.

TRIMMING OF WOOD POST MAY BE NECESSARY FOR STEEL TUBE FOUNDATION.

STEEL TUBE FOUNDATIONS SHALL BE DRILLED AND BACK-FILLED WITH A SUITABLE MATERIAL WHEN THE SOIL PLATE IS BOLTED, AS SHOWN, TO THE STEEL TUBE. STEEL TUBE FOUNDATION MAY BE DRIVEN WHEN THE SOIL PLATE IS WELDED, AS SHOWN, TO THE STEEL TUBE.

IF A SEAL IS PRESENT ON THIS SHEET IT HAS BEEN ELECTRONICALLY SEALED AND DATED.

MISSOURI HIGHWAYS AND TRANSPORTATION COMMISSION
105 WEST CAPITOL
JEFFERSON CITY, MO 65102
1-888-ASK-MODOT (1-888-275-6636)

STATE OF MISSOURI
KATHRYN PHILLIPS HARVEY
NUMBER PE-23751
PROFESSIONAL ENGINEER
THIS SHEET HAS BEEN SIGNED, SEALED AND DATED ELECTRONICALLY.

GUARDRAIL
TERMINAL ANCHOR ENDS

DATE EFFECTIVE:	08/01/2012	606.30F	SHEET NO. 4 OF 9
DATE PREPARED:	7/19/2012		

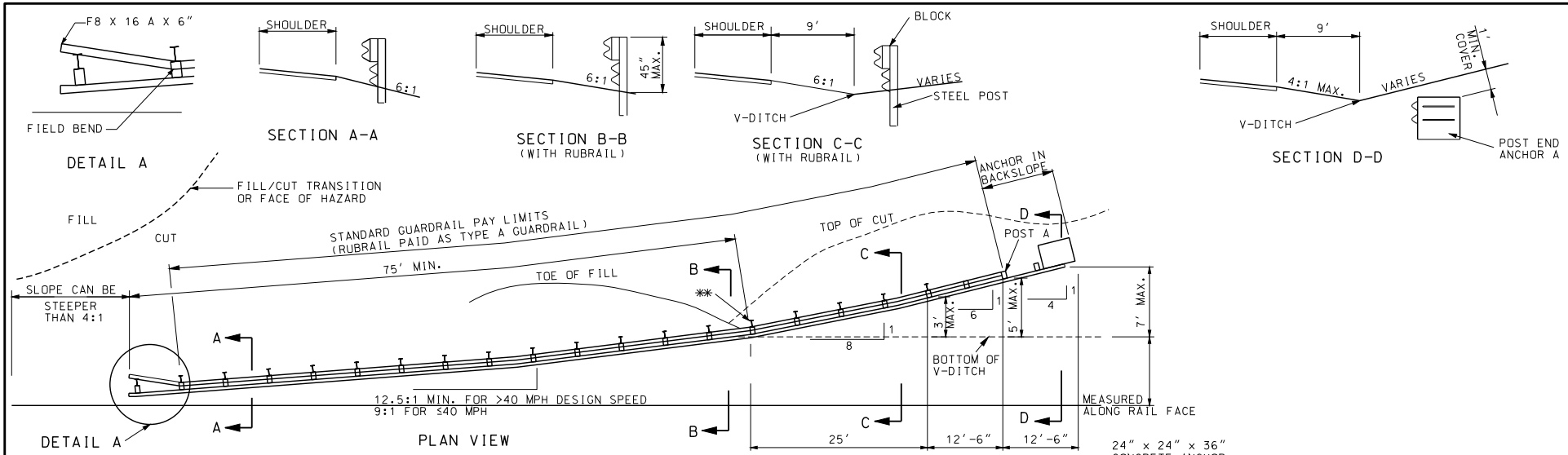

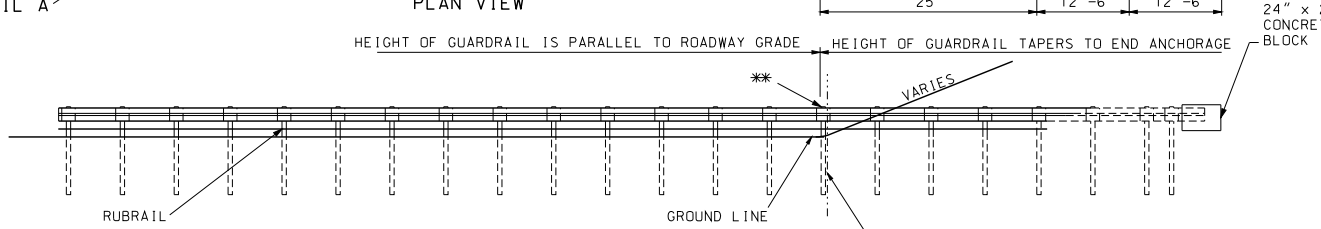

ELEVATION

ANCHORED IN BACKSLOPE GUARDRAIL

** THE POST BEHIND THE DITCHLINE MAY BE SHORTENED TO PROVIDE 48" MIN. EMBEDMENT.

COST OF SHAPING ROCK FACE FOR PLACING OF TERMINAL CONNECTOR, DRILLING HOLES, FURNISHING AND PLACING BOLTS, WASHERS, CAULKING, ANCHORS AND END SHOE TO BE INCLUDED IN THE PRICE OF GUARDRAIL ANCHOR, ROCK FACE.

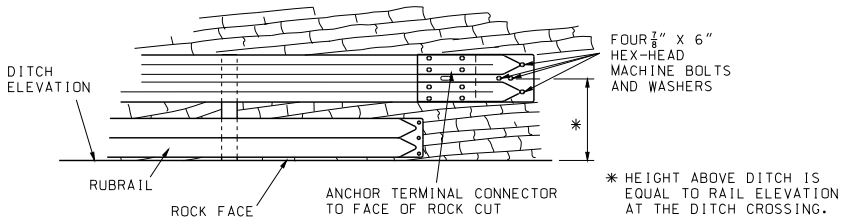

* HEIGHT ABOVE DITCH IS EQUAL TO RAIL ELEVATION AT THE DITCH CROSSING.

ROCK FACE GUARDRAIL ANCHOR

GENERAL NOTES:

FOR END ANCHOR DETAILS, SEE SHEET 2-4 OF 9.

EIGHT FOOT POST IS REQUIRED WITH RUBRAIL.

RUBRAIL BEGINS WHEN THE DISTANCE BETWEEN THE GUARDRAIL AND THE GROUND IS 18" AND INCREASING.

END ANCHOR POSTS 1 AND 2 SHALL HAVE FOUNDATION TYPE AS SHOWN ON SHEET 4 OF 9.

THE CONTRACT UNIT PRICE FOR EMBEDDED GUARDRAIL ANCHOR SHALL INCLUDE THE CONCRETE ANCHOR. EXCAVATION AND BACKFILLING, OR TERMINAL CONNECTOR, AND ALL INCIDENTIAL HARDWARE AND WORK NECESSARY TO COMPLETE THE INSTALLATION.

THE GUARDRAIL SHALL EXTEND 50'± BEYOND THE DITCH LINE AND TERMINATE A MINIMUM OF 12 INCHES BELOW GROUND ELEVATION OF THE BACKSLOPE.

BLOCKOUTS WILL NOT BE REQUIRED FOR ANY POST WHICH WILL BE COMPLETELY BELOW GROUND. THE ALIGNMENT OF SUCH POSTS SHALL BE APPROVED BY THE ENGINEER.

SEE OTHER DRAWINGS AND STANDARD SPECIFICATIONS FOR MATERIAL AND CONSTRUCTION REQUIREMENTS NOT SHOWN.

MISSOURI HIGHWAYS AND TRANSPORTATION COMMISSION
105 WEST CAPITOL
JEFFERSON CITY, MO 65102
1-888-ASK-MODOT (1-888-275-6636)

STATE OF MISSOURI
KATHRYN PHILLIPS HARVEY
NUMBER PE-2007051
PROFESSIONAL ENGINEER
THIS SHEET HAS BEEN SIGNED, SEALED AND DATED ELECTRONICALLY.

GUARDRAIL
TERMINAL ENDS
EMBEDDED AND ROCK FACE
(V-DITCH STEEPER THAN 10:1, 4:1 MAX. FORESLOPE)

DATE EFFECTIVE: 08/01/2012
DATE PREPARED: 7/19/2012

606.30F

SHEET NO. 5 OF 9

IF A SEAL IS PRESENT ON THIS SHEET IT HAS BEEN ELECTRONICALLY SEALED AND DATED.

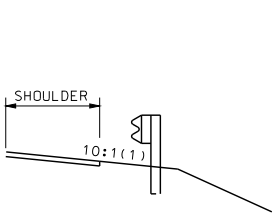

SECTION A-A

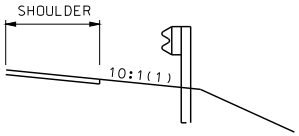

SECTION B-B

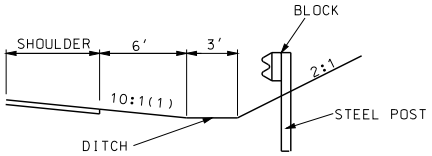

SECTION C-C

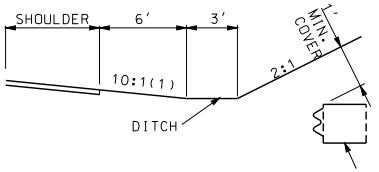

SECTION D-D

CONCRETE BLOCK ANCHOR OR EMBEDDED STEEL POST

(1) MAX. CROSS SLOPE SHALL NOT EXCEED 6:1. RUBRAIL IS REQUIREDWHEN CROSS SLOPE EXCEEDS 10:1 OR WHEN THE DISTANCE BETWEENTHE GUARDRAIL AND THE GROUND IS 18" AND INCREASING.

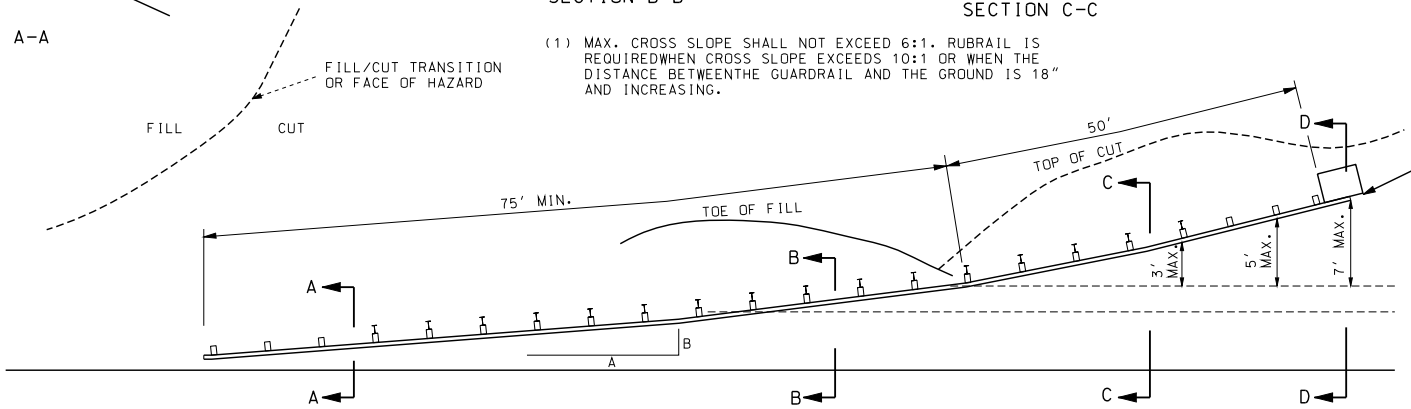

PLAN VIEW

10:1 CROSS SLOPE	
DESIGN SPEED mph	A:B
70	15:1
60	13:1
55	12:1
50	11:1
45	10:1
40	9:1
30 OR LESS	7:1

STEEPER THAN 10:1 CROSS SLOPE (1)	
DESIGN SPEED mph	A:B
45-70	12.5:1
40	9:1
30 OR LESS	7:1

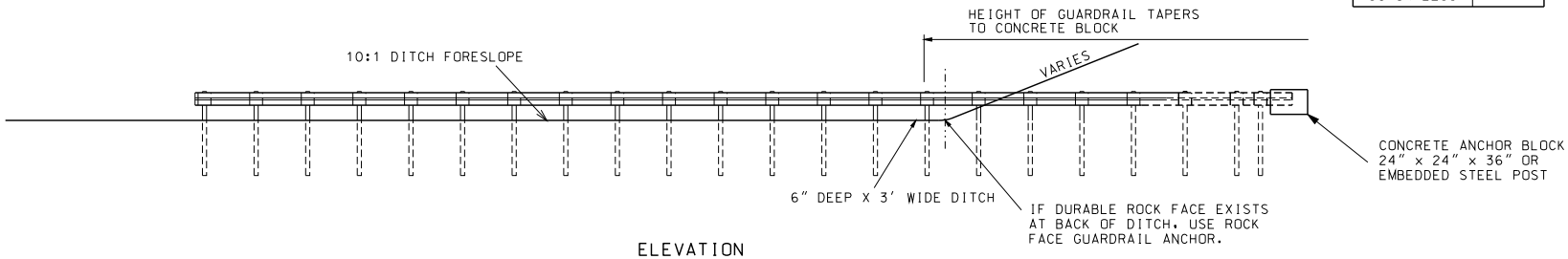

ELEVATION

ANCHORED IN BACKSLOPE GUARDRAIL

IF A SEAL IS PRESENT ON THIS SHEET IT HAS BEEN ELECTRONICALLY SEALED AND DATED.

MISSOURI HIGHWAYS AND TRANSPORTATION COMMISSION
105 WEST CAPITOL
JEFFERSON CITY, MO 65102
1-888-ASK-MODOT (1-888-275-6636)

STATE OF MISSOURI
KATHRYN PHILLIPS HARVEY
NUMBER PE-23751
PROFESSIONAL ENGINEER
THIS SHEET HAS BEEN SIGNED, SEALED AND DATED ELECTRONICALLY.

GUARDRAIL
EMBEDDED TERMINAL ENDS (FLAT DITCH)

DATE EFFECTIVE: 08/01/2012
DATE PREPARED: 7/19/2012

606.30F

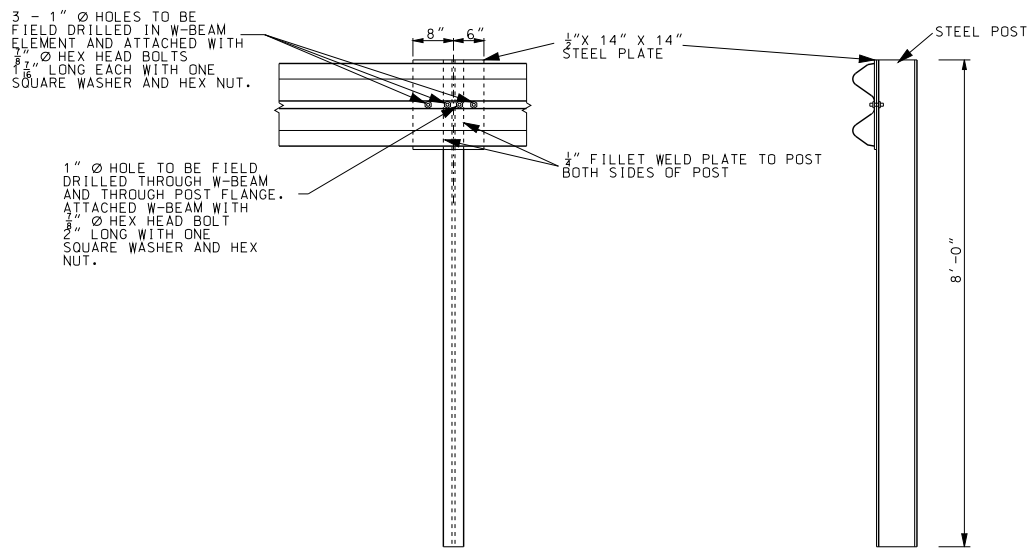

EMBEDDED STEEL POST

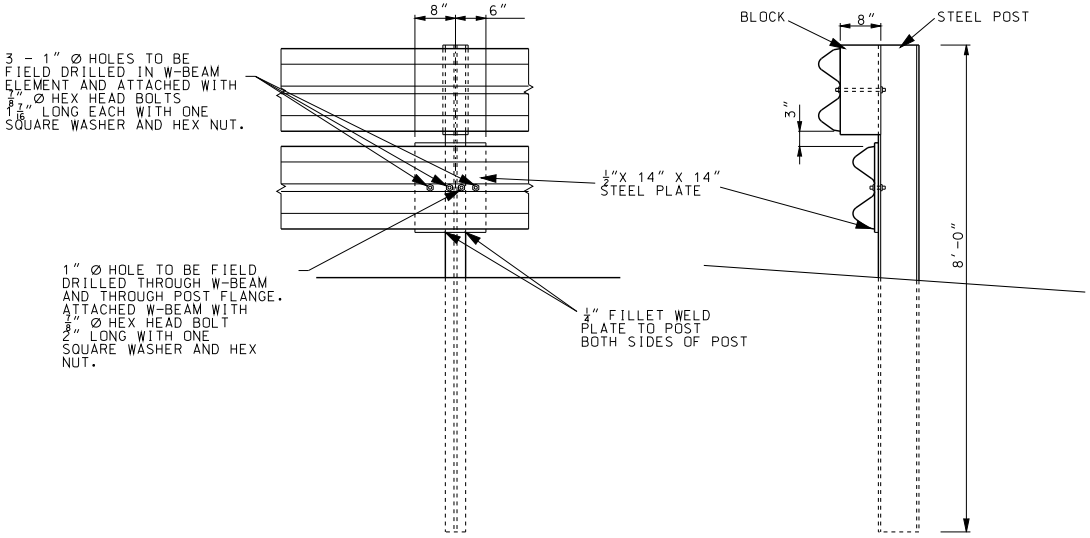

SPECIAL RUBRAIL TO POST CONNECTION AT POST A

IF A SEAL IS PRESENT ON THIS SHEET IT HAS BEEN ELECTRONICALLY SEALED AND DATED.

MISSOURI HIGHWAYS AND TRANSPORTATION COMMISSION
105 WEST CAPITOL
JEFFERSON CITY, MO 65102
1-888-ASK-MODOT (1-888-275-6636)

STATE OF MISSOURI
KATHRYN PHILLIPS HARVEY
NUMBER PE-23751
PROFESSIONAL ENGINEER
THIS SHEET HAS BEEN SIGNED, SEALED AND DATED ELECTRONICALLY.

GUARDRAIL
EMBEDDED ANCHOR TERMINAL ENDS (STEEL POST OPTION)

DATE EFFECTIVE:	08/01/2012	606.30F	SHEET NO. 7 OF 9
DATE PREPARED:	7/19/2012		

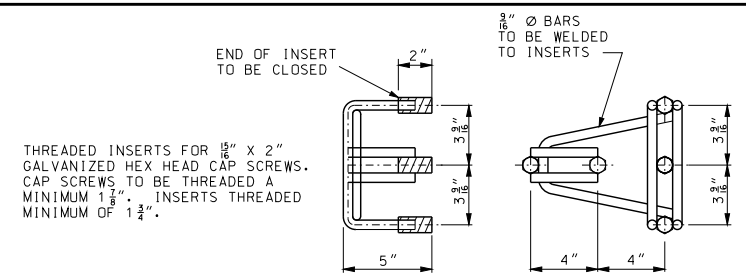

CONCRETE BLOCK ANCHOR
ANCHOR ASSEMBLY

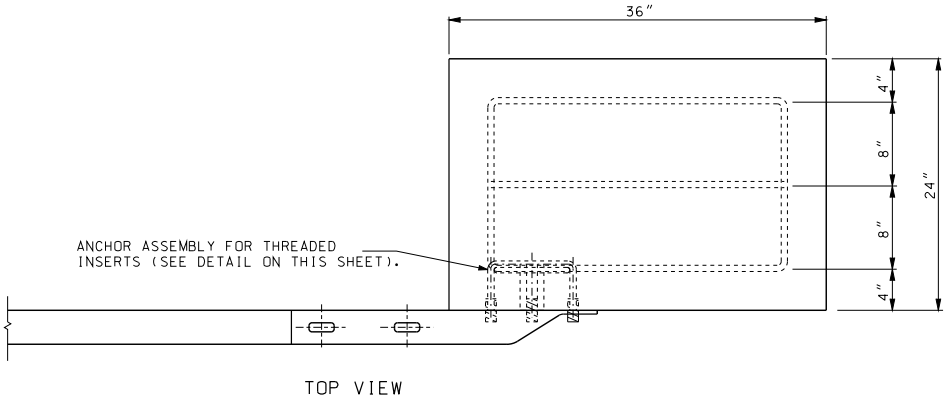

TOP VIEW

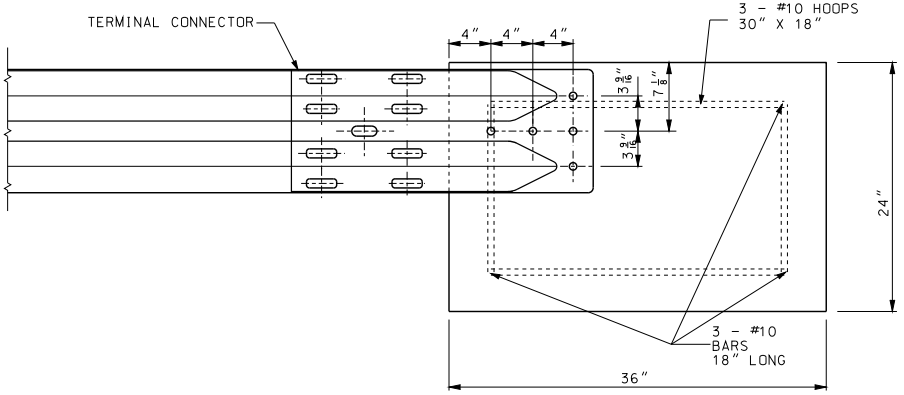

ELEVATION

CONCRETE BLOCK ANCHOR
(24" X 24" X 36")

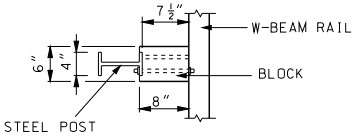

PLAN

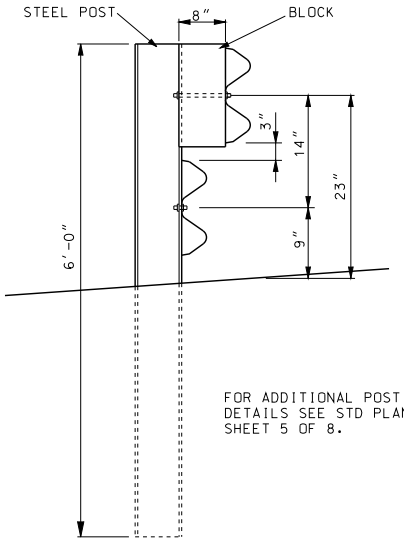

FOR ADDITIONAL POST AND BLOCK DETAILS SEE STD PLAN 606.00, SHEET 5 OF 8.

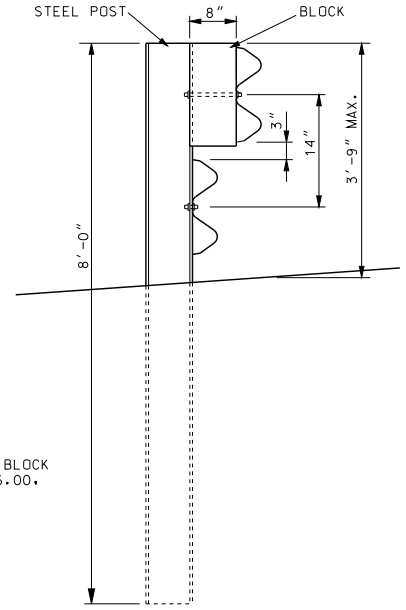

ELEVATION OF 6' POST

ELEVATION 8' POST

STEEL POST AND BLOCK DETAIL

IF A SEAL IS PRESENT ON THIS SHEET IT HAS BEEN ELECTRONICALLY SEALED AND DATED.

MISSOURI HIGHWAYS AND TRANSPORTATION COMMISSION
105 WEST CAPITOL
JEFFERSON CITY, MO 65102
1-888-ASK-MODOT (1-888-275-6636)

STATE OF MISSOURI
KATHRYN PHILLIPS HARVEY
NUMBER PE-2007051
PROFESSIONAL ENGINEER
THIS SHEET WAS SIGNED, SEALED AND DATED ELECTRONICALLY.

GUARDRAIL
EMBEDDED TERMINAL ENDS
GENERAL DETAILS

DATE EFFECTIVE: 08/01/2012
DATE PREPARED: 7/19/2012

606.30F

SHEET NO.
8 OF 9

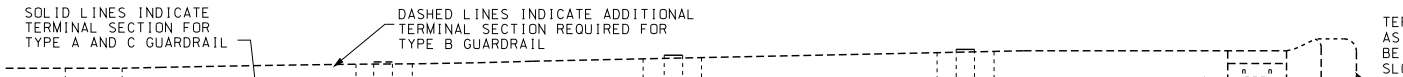

PLAN

TERMINAL AND INTERMEDIATE POST SHALL BE THE SAME LENGTH AS THE LINE POST. HEIGHT OF POST NOS. 1, 2, AND 3 SHALL BE VARIED TO MEET EXISTING CONDITIONS AND TO PROVIDE SLOPE TRANSITION.

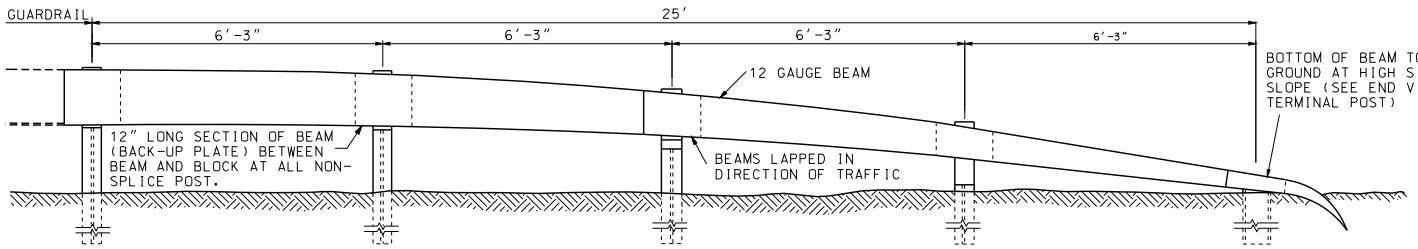

LINE POST POST NO. 1 POST NO. 2 POST NO. 3 TERMINAL POST

ELEVATION

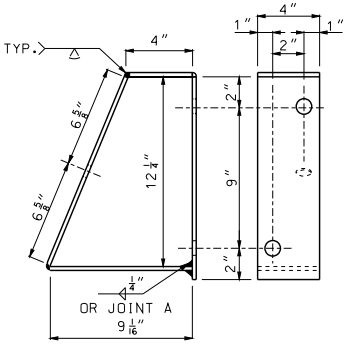

CONNECTOR FOR POST NO.1

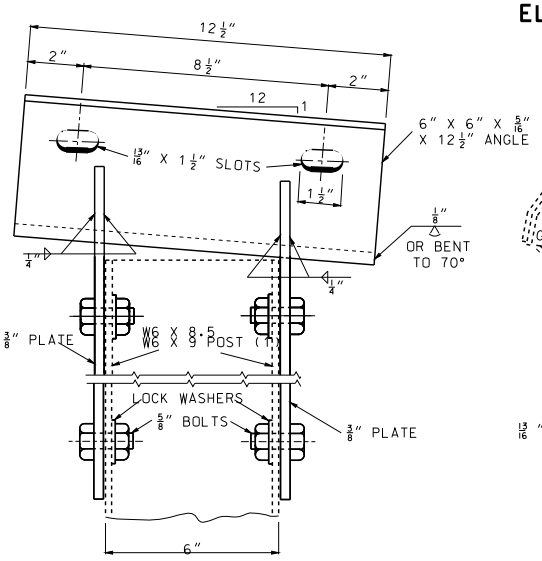

SIDE VIEW

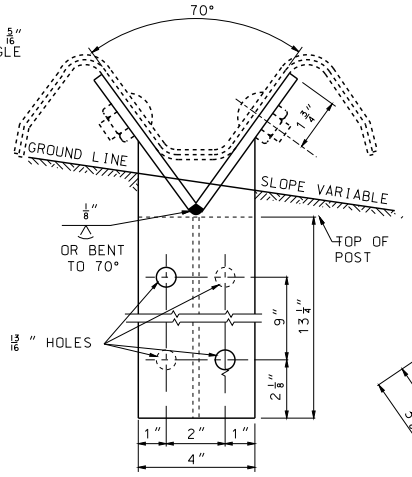

END VIEW

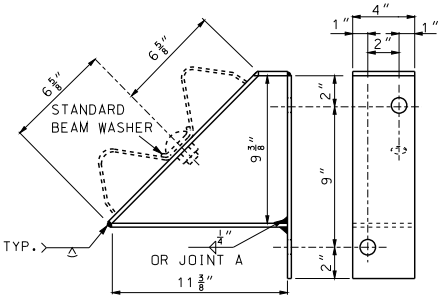

CONNECTOR FOR POST NO.2

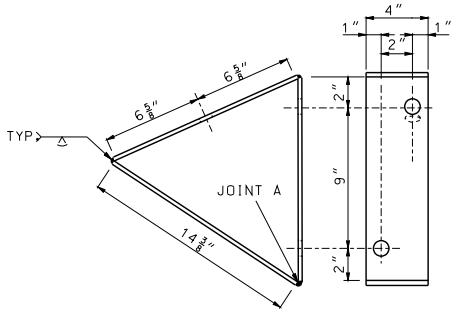

CONNECTOR FOR POST NO.3

DETAIL OF INTERMEDIATE POST CONNECTORS

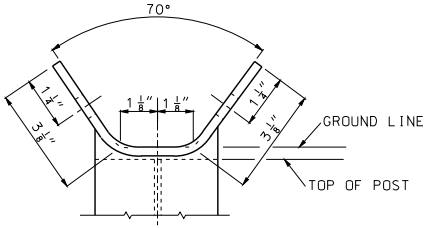

OPTIONAL DESIGN

AS AN ALTERNATE TO ALL WELDED JOINTS THE CONTRACTOR WILL BE PERMITTED TO BEND CONNECTORS AND WELD MINIMUM OF ONE JOINT A.

DETAIL OF TERMINAL POST CONNECTOR

(1) THE CONTRACTOR MAY AT THEIR OPTION, FURNISH EQUIVALENT SECTIONS FABRICATED FROM MATERIAL MEETING AND IN ACCORDANCE WITH THE REQUIREMENTS OF ASTM A769, GRADE 36 OR 40. THE SECTIONS SHALL BE GALVANIZED AFTER FABRICATION IN ACCORDANCE WITH THE REQUIREMENTS OF AASHTO M111

NOTES:
ALL WELDS AS SHOWN.
CONNECTORS WILL BE CONSTRUCTED OF 4" X 3/8" BAR.
ALL HOLES IN CONNECTORS WILL BE 13/16".

MISSOURI HIGHWAYS AND TRANSPORTATION COMMISSION
105 WEST CAPITOL
JEFFERSON CITY, MO 65102
1-888-ASK-MODOT (1-888-275-6636)

STATE OF MISSOURI
KATHRYN PHILLIPS HARVEY
NUMBER PE-23751
PROFESSIONAL ENGINEER
THIS SHEET HAS BEEN SIGNED, SEALED AND DATED ELECTRONICALLY.

GUARDRAIL
TERMINAL ENDS SLOPED AND TAPERED

DATE EFFECTIVE:	08/01/2012	606.30F	SHEET NO.
DATE PREPARED:	7/19/2012		9 OF 9

IF A SEAL IS PRESENT ON THIS SHEET IT HAS BEEN ELECTRONICALLY SEALED AND DATED.

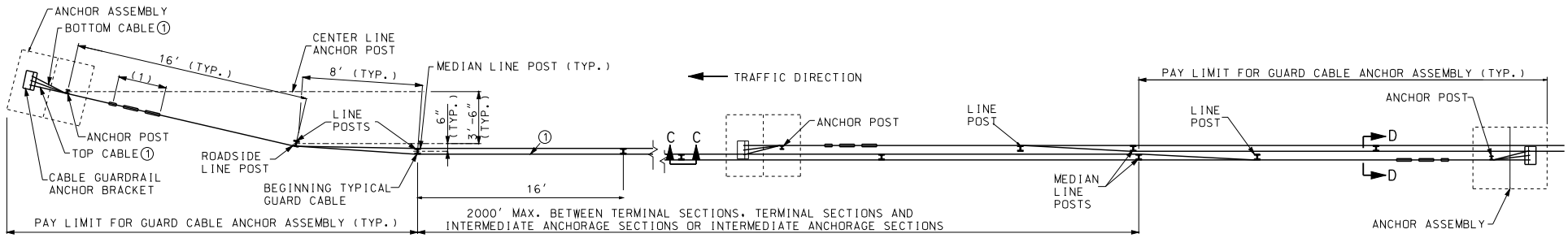

TYPICAL TERMINAL SECTION

TRAFFIC DIRECTION →

TYPICAL INTERMEDIATE TERMINAL SECTIONS

MEDIAN INSTALLATION PLAN

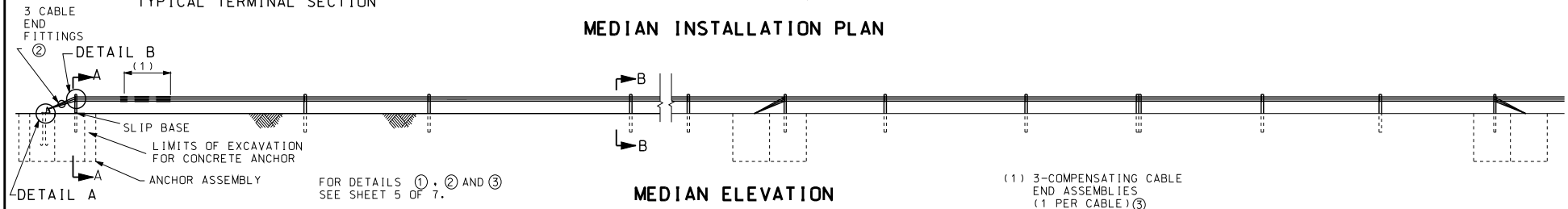

MEDIAN ELEVATION

(1) 3-COMPENSATING CABLE END ASSEMBLIES (1 PER CABLE) ③

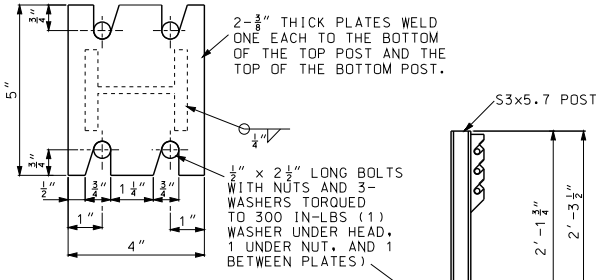

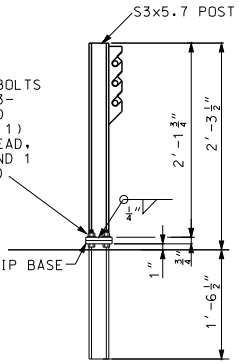

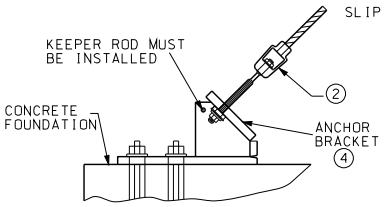

DETAIL A
ANCHOR BRACKET

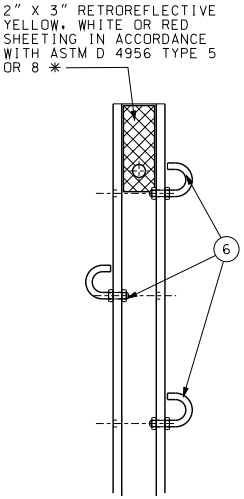

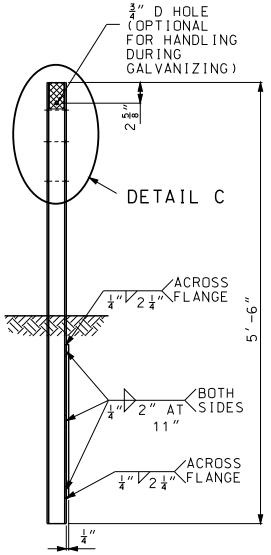

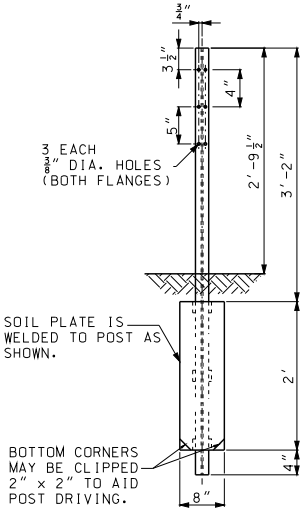

LINE POST AND WELDED SOIL PLATE

GENERAL NOTES:

IN THE EVENT THE NORMAL 16′ POST SPACING WOULD PLACE A POST ON A DROP INLET, THE SPACING OF THE TWO POSTS IMMEDIATELY PRECEDING THE INLET SHALL BE REDUCED SUCH THAT THE FOLLOWING POST CLEARS THE INLET. EACH SUBSEQUENT POST SHALL BE SPACED AT 16′. IN NO CASE SHALL THE SPACING EXCEED 16′.

IN THE EVENT A LONGITUDINAL MEDIAN PIPE IS ENCOUNTERED THE CABLE SHALL BE PLACED PARALLEL TO THE PIPE AT A MINIMUM OFFSET OF 12″. THE OFFSET SHALL BE ACHIEVED BY A MINIMUM 16:1 TAPER ON THE UPSTREAM AND DOWNSTREAM END OF THE PIPE.

FOR SECTION D-D, SEE SHEET 4.

✳ REFLECTIVE SHEETING SHALL FOLLOW GUIDELINES OUTLINED IN SEC 1042.2.7 FOR CORRECT APPLICATION OF SHEETING TO GUARD CABLE POST. THE COLOR OF THE SHEETING SHALL MATCH THE CLOSEST ADJACENT PAVEMENT MARKING. RED SHEETING SHALL BE APPLIED TO THE BACK SIDE OF THE POST WHEN THE DELINEATION IS PLACED ALONG AN INTERCHANGE RAMP AND COULD BE VIEWED BY WRONG WAY TRAFFIC.

MISSOURI HIGHWAYS AND TRANSPORTATION COMMISSION
105 WEST CAPITOL
JEFFERSON CITY, MO 65102
1-888-ASK-MODOT (1-888-275-6636)

STATE OF MISSOURI
KATHRYN PHILLIPS HARVEY
NUMBER PE-23751
PROFESSIONAL ENGINEER
THIS SHEET HAS BEEN SIGNED, SEALED AND DATED ELECTRONICALLY.

THREE-STRAND GUARD CABLE
MEDIAN APPLICATION

DATE EFFECTIVE:	01/01/2005	606.41J	SHEET NO. 1 OF 7
DATE PREPARED:	11/26/2012		

IF A SEAL IS PRESENT ON THIS SHEET IT HAS BEEN ELECTRONICALLY SEALED AND DATED.

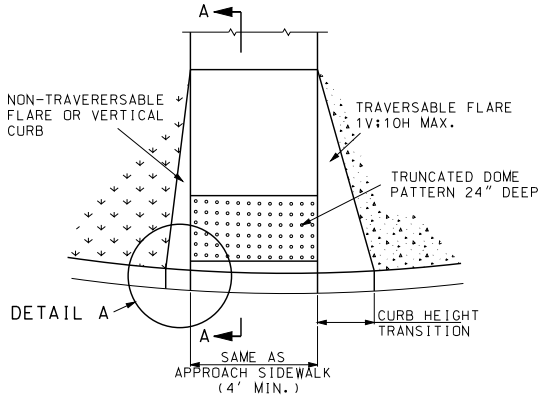

PERPENDICULAR CONCRETE CURB RAMP

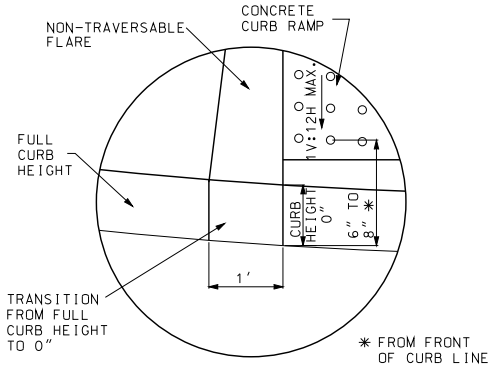

DETAIL A

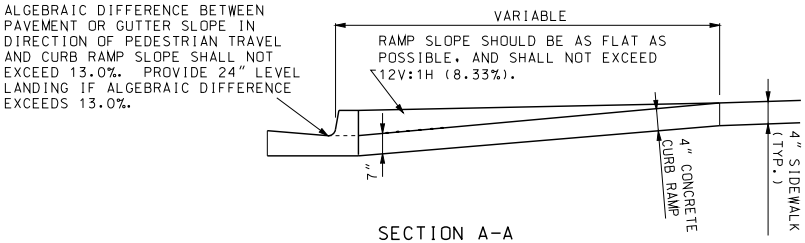

SECTION A-A

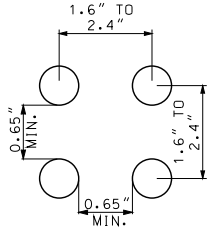

TRUNCATED DOMES SPACING

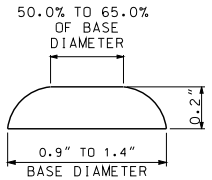

TRUNCATED DOMES CROSS SECTION

NOTES
1. ALL RAMPS SHALL NOT HAVE RUNNING SLOPES GREATER THAN 8.3% OR 1V:12H.
2. CURB RAMP LENGTH NOT REQUIRED TO EXCEED 15 FEET.

GENERAL NOTES:

ALL AREAS OF THE PEDESTRIAN ACCESS ROUTE MUST BE COMPLIANT WITH THE "AMERICANS WITH DISABLILITES ACT ACCESSIBLILITY GUIDELINES (ADAAG)". EXCEPTIONS MUST BE APPROVED BY THE ENGINEER. ALL OTHER AREAS OF (NON-COMPLIANCE SHALL BE REMOVED AND CORRECTED AT THE CONTRACTOR'S EXPENSE.

FINISHED SIDEWALK SHALL BE STABLE, SLIP RESISTANT AND SURFACE DOES NOT POND WATER.

SIDEWALK AND RAMP CROSS SLOPES SHALL BE A MINIMUM OF 1.0% TO FACILITATE DRAINAGE AND A MAXIMUM OF 2.0% TO BE USABLE FOR DISABLED INDIVIDUALS.

STORMWATER INLETS, SIGNS, POSTS, MANHOLE COVERS, PULL BOXES AND OTHER ACCESS LIDS SHOULD BE AVOIDED WITHIN THE SIDEWALK. IF SUCH A LOCATION IS NECESSARY, THE FEATURE MUST MEET ADA STANDARDS.

THE RUNNING GRADE OF A SIDEWALK SHALL NOT EXCEED 5.0% UNLESS IT IS MATCHING THE GRADE OF THE ADJACENT ROADWAY.

PEDESTRIAN ACCESS ROUTE SHALL CONTINUE ACROSS DRIVEWAYS.

LANDINGS SHALL BE CONSTRUCTED AT THE TOP AND/OR BOTTOM OF A CURB RAMP WHEREVER A TURNING MOVEMENT OR ACCESS TO PEDESTRIAN PUSH BUTTON IS REQUIRED.

LANDINGS LOCATED IN THE ROADWAY MUST BE COMPLETELY CONTAINED WITHIN THE CROSSWALK.

SIDE FLARES OF CURB RAMPS, IN THE PATH OF PEDESTRIAN TRAVEL (TRAVERSABLE), SHALL NOT EXCEED A SLOPE OF 1V:10H. SIDE FLARES OUTSIDE THE PEDESTRIAN PATH NONTRAVERSABLE) MAY BE 1V:2H OR VERTICAL.

TRANSITION FROM SIDEWALK TO GUTTER TO ROADWAY MUST BE FLUSH.

DETECTABLE WARNINGS (TRUNCATED DOMES) SHALL BE PREFORMED AND INSTALLED AS PER MANUFACTURER'S RECOMENDATIONS. STAMPED CONCRETE WILL NOT BE ACCEPTED.

THE DETECTABLE WARNING SURFACE SHALL CONTRAST VISUALLY WITH ADJOINING SURFACES, EITHER LIGHT-ON-DARK OR DARK-ON-LIGHT. TRUNCATED DOMES SHALL SPAN THE FULL WIDTH (WTHIN 2") OF THE RAMP OR LANDING.

DETECTABLE WARNING DOMES SHALL BE ALIGNED PARALLEL TO THE SLOPE WHEN INSTALLED ON A RAMP. WHEN INSTALLED ON A LANDING OR BLEND TRANSITION, THEY SHALL BE ALIGNED PERPENDICULAR OR RADIAL TO THE BREAK BETWEEN THE RAMP, LANDING OR BLENDED TRANSITION AND THE STREET.

WHEN IT IS TECHNICALLY INFEASIBLE TO CONSTRUCT 1V:12H RAMP SLOPE, WHILE ALTERING EXISTING PEDESTRIAN FACILITIES, A SLOPE BETWEEN 1V:12H AND 1V:10H IS PERMISSIBLE FOR A MAXIMUM RISE OF 6", AND A SLOPE BETWEEN 1V:10H AND 1V:8H IS PERMISSIBLE FOR A MAXIMUM RISE OF 3".

IF CONSTRUCTION OF 5' X 5' LANDING IS NOT FEASIBLE, 4' X 4' LANDING MAY BE USED.

IF A SEAL IS PRESENT ON THIS SHEET IT HAS BEEN ELECTRONICALLY SEALED AND DATED.

MISSOURI HIGHWAYS AND TRANSPORTATION COMMISSION
105 WEST CAPITOL
JEFFERSON CITY, MO 65102
1-888-ASK-MODOT (1-888-275-6636)

STATE OF MISSOURI
KATHRYN PHILLIPS HARVEY
NUMBER PE-23751
PROFESSIONAL ENGINEER
THIS SHEET HAS BEEN SIGNED, SEALED AND DATED ELECTRONICALLY.

CONCRETE SIDEWALK AND CURB RAMPS

DATE EFFECTIVE:	10/01/2009	608.10N	SHEET NO.
DATE PREPARED:	10/18/2011		2 OF 4

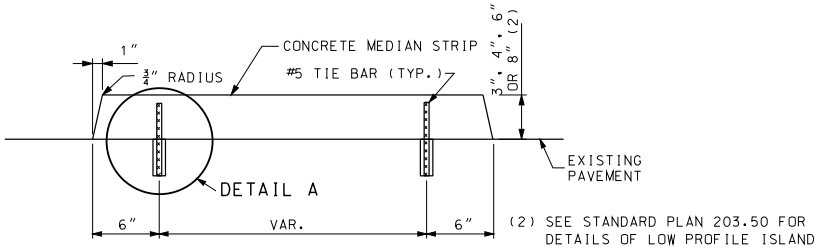

(2) SEE STANDARD PLAN 203.50 FOR DETAILS OF LOW PROFILE ISLAND

SECTION A-A
CONCRETE MEDIAN STRIP

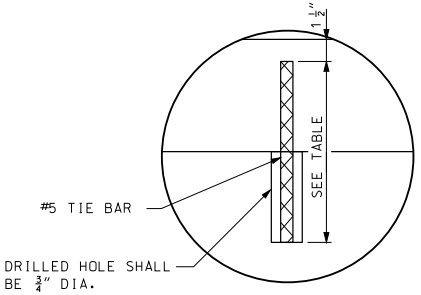

DETAIL A

MEDIAN HEIGTH	BAR LENGTH
3"	8"
4"	9"
6"	11"
8"	13"

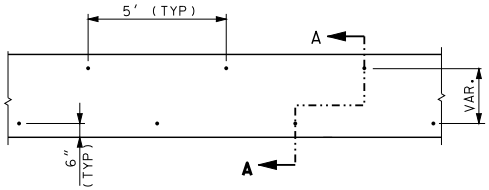

TIE BAR LOCATIONS FOR
CONCRETE MEDIAN STRIP

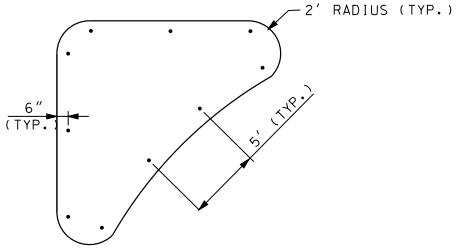

TIE BAR LOCATIONS FOR
CONCRETE MEDIAN STRIP (ISLAND)

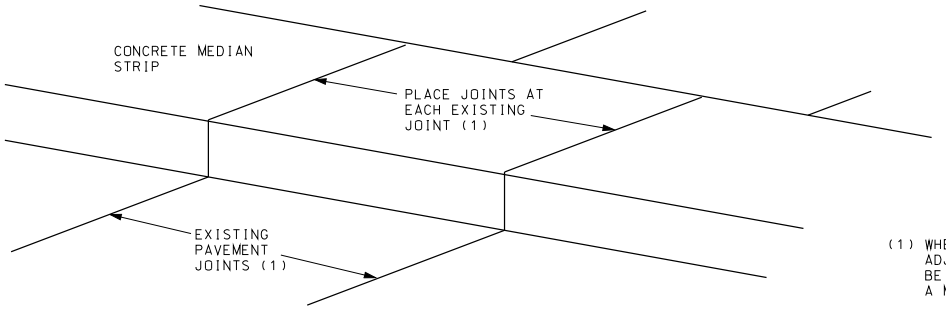

CONCRETE MEDIAN STRIP JOINT LOCATION

(1) WHEN THERE ARE NO VISIBLE JOINTS IN THE ADJACENT PAVEMENT. THE JOINT SPACING WILL BE EQUAL TO THE MEDIAN STRIP WIDTH, WITH A MINIMUM SPACING OF 10'.

GENERAL NOTES:

TIE BARS SHALL BE EPOXY COATED, DEFORMED REINFORCING BARS MEETING THE REQUIREMENTS OF SECTION 710 AND 1057.

BONDING FOR TIE BARS SHALL BE EPOXY OR POLYESTER BONDING AGENTS AS SPECIFIED IN SECTION 1039.

THE FACE OF THE MEDIAN MAY BE CONSTRUCTED WITHOUT BATTER WHEN CONSTRUCTED ON A RADIUS OF 6' OR LESS.

WHEN CONCRETE MEDIANS ARE CONSTRUCTED DIRECTLY BENEATH GUARDRAIL, THE MEDIAN HEIGHT WILL BE 4".

IF A SEAL IS PRESENT ON THIS SHEET IT HAS BEEN ELECTRONICALLY SEALED AND DATED.

MISSOURI HIGHWAYS AND TRANSPORTATION COMMISSION
105 WEST CAPITOL
JEFFERSON CITY, MO 65102
1-888-ASK-MODOT (1-888-275-6636)

STATE OF MISSOURI
KATHRYN PHILLIPS HARVEY
NUMBER PE-23751
PROFESSIONAL ENGINEER
THIS SHEET HAS BEEN SIGNED, SEALED AND DATED ELECTRONICALLY.

CONCRETE MEDIAN STRIP

DATE EFFECTIVE: 02/01/2011
DATE PREPARED: 3/9/2011

608.30A

SHEET NO. 1 OF 1

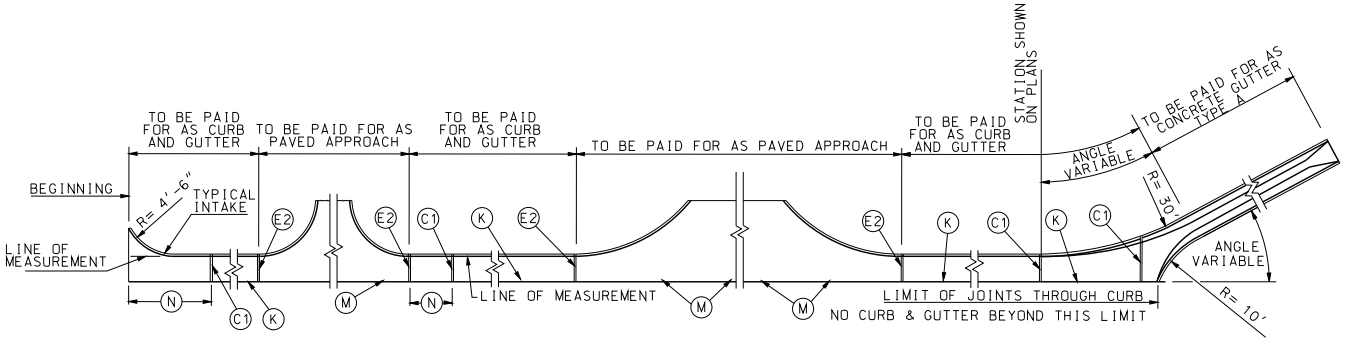

PLAN OF MEASUREMENT OF CURB & GUTTER AND JOINT PLAN

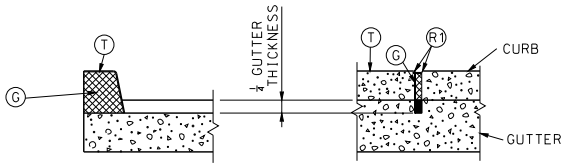

(C1) JOINT

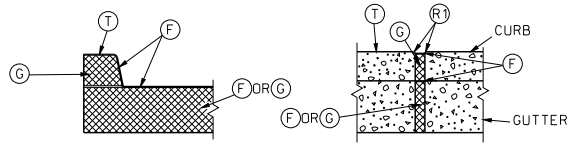

(E2) JOINT

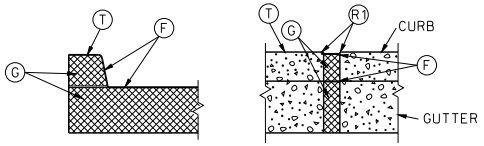

(E1) JOINT

LEGEND

- (C1) 1/8" MAXIMUM WIDTH TRANSVERSE CONTRACTION JOINT (PREFORMED OR SAWED).
- (E1) 2" TRANSVERSE EXPANSION JOINT. (PREFORMED OR SAWED)
- (E2) 1/2" TRANSVERSE EXPANSION JOINT. (PREFORMED OR SAWED)
- (F) FILLER FOR JOINTS - HOT POURED.
- (G) PREFORMED JOINT FILLER MATERIAL.
- (K) TONGUE & GROOVE JOINT WITH TIE BAR - SEE DETAIL.
- (M) TONGUE & GROOVE JOINT WITHOUT TIE BARS - SEE DETAIL.
- (N) NOT LESS THAN 10' OR MORE THAN 30'.
- (T) TOP OF CURB.
- (R1) ROUND TO 1/4" RADIUS. (EXCEPT FOR SAWED JOINTS)

GNERAL NOTES:

A MINIMUM 4" TYPE 1 OR 5 AGGREGATE BASE SHALL BE PLACED BENEATH ALL CURB AND GUTTER SECTIONS AND INCLUDED WITHIN THE MAINLINE BASE PAY LIMITS.

WHEN CURBS ARE CONSTRUCTED DIRECTLY BENEATH GUARDRAIL, CURB HEIGHT SHALL BE 4 INCH BARRIER CURB, AS SHOWN ON STANDARD PLAN 606.00.

CURB, GUTTER AND CURB AND CUTTER CONSTRUCTED ALONG AND ATTACHED TO CONCRETE PAVEMENT OR BASE SHALL HAVE:

1. JOINT (C1) ONE-QUARTER DEPTH OF CURB AND GUTTER THICKNESS AS A CONTINUATION OF EACH CONTRACTION JOINT IN THE BASE OR PAVEMENT.
2. JOINT (E1) AS CONTINUATION OF 2" EXPANSION JOINT (E) IN THE CONCRETE BASE OR PAVEMENT SHALL EXTEND AND CONTINUE THROUGH THE CURB, CUTTER AND CURB AND GUTTER.
3. JOINT (E2) THROUGH CURB AND CURB AND CUTTER AT THE BEGINNING AND END OF EACH PAVED APPROACH.

CURB, CURB AND GUTTER AND GUTTER CONSTRUCTED APART OR SEPARATED FROM CONCRETE BASE OR PAVEMENT OR AS A FORM FOR ASPHALTIC CONCRETE PAVEMENT SHALL HAVE A JOINT (E2) ENTIRELY THROUGH THE CURB, CURB AND GUTTER AND GUTTER, AT THE BEGINNING AND END OF EACH "PAVED APPROACH" AND A JOINT (C1) TO 1/4 DEPTH OF CURB AND GUTTER THICKNESS AT INTERVALS OF 30 FEET BETWEEN APPROACHES.

JOINTS (E1) AND (E2) THROUGH CURB SHALL BE FILLED WITH PREFORMED FILLER MATERIAL AND SEALED WITH HOT POURED FILLER FOR JOINTS.

JOINT (E1) IN GUTTER SHALL BE FILLED WITH PREFORMED FILLER AND SEALED WITH HOT FILLER MATERIAL.

JOINT (E2) IN GUTTER SHALL BE FILLED WITH PREFORMED FILLER AND SEALED WITH FILLER OR FILLED WITH HOT POURED FILLER.

PREFORMED FILLER MATERIAL SHALL BE PLACED TO PROVIDE 1" HOT POURED FILLER FOR JOINTS.

THE BARRIER CLASS CURBS MAY BE CONSTRUCTED WITHOUT BATTER WHEN CONSTRUCTED ON A RADIUS OF 6 FEET OR LESS. THE (R2) WILL BE REQUIRED.

WHERE A SIDEWALK INTERSECTS A CURB, THE SIDEWALK SHALL BE RAMPED NO STEEPER THAN 12:1 SLOPE TO PROVIDED ACCESS FOR WHEELCHAIR ACROSS APPROACHES.

WHEN ALLOWED BY THE ENGINEER, TYPES A AND B GUTTER MAY BE PRECAST TO CONFORM TO THE DIMENSIONS SHOWN. THE PRECASTER SHALL SUBMIT SHOP DRAWINGS INDICATING THE SECTION LENGTH. SECTION CONNECTION, AND PROPOSED JOINT SEALING SYSTEM. WHEN PRECAST SECTIONS CANNOT CONFORM TO ANY VERTICAL OR HORIZONTAL CURVE DESIGNATED ON THE PLANS. THE GUTTER SHALL BE CAST-IN-PLACE. A COMBINATION OF CAST-IN-PLACE AND PRECAST GUTTER MAY BE PERMITTED.

MISSOURI HIGHWAYS AND TRANSPORTATION COMMISSION
105 WEST CAPITOL
JEFFERSON CITY, MO 65102
1-888-ASK-MODOT (1-888-275-6636)

STATE OF MISSOURI
KATHRYN PHILLIPS HARVEY
NUMBER PE-23751
PROFESSIONAL ENGINEER
THIS SHEET HAS BEEN SIGNED, SEALED AND DATED ELECTRONICALLY.

CONCRETE CURB, CURB AND GUTTER AND GUTTER

DATE EFFECTIVE:	08/01/2008	609.00P	SHEET NO.
DATE PREPARED:	12/29/2011		1 OF 2

IF A SEAL IS PRESENT ON THIS SHEET IT HAS BEEN ELECTRONICALLY SEALED AND DATED.

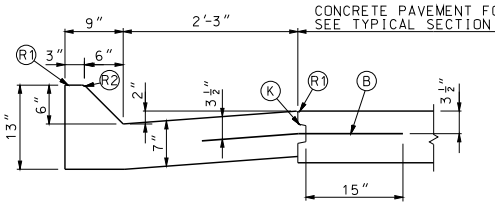

TYPE A
(MOUNTABLE)

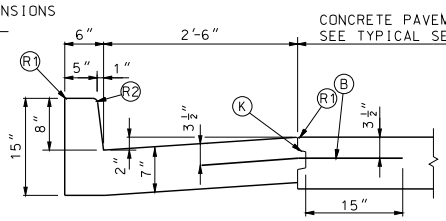

TYPE B
(BARRIER)

CURB & GUTTER

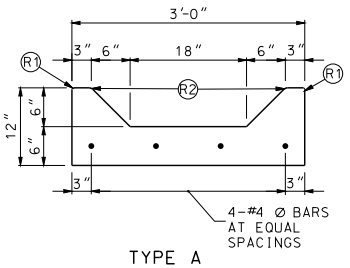

TYPE A

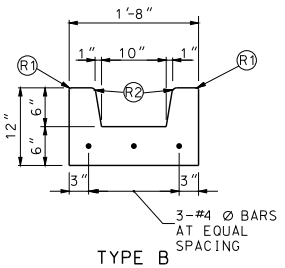

TYPE B

GUTTERS

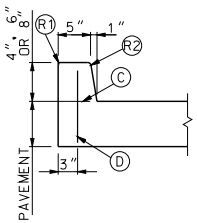

TYPE A
(INTEGRAL)

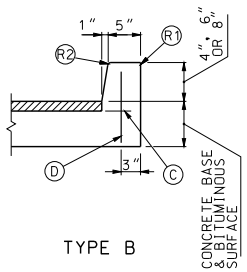

TYPE B

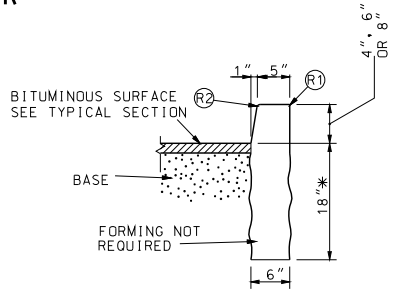

TYPE S
(SEPARATED)

* DEPTH MAY BE REDUCED IF KEYED 6" IN ROCK

BARRIER CURBS

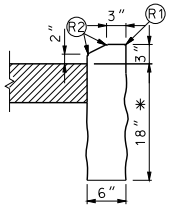

TYPE F
(SEPARATED)

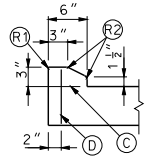

TYPE E
(INTEGRAL)

BEGINNING AND ENDINGS OF INTROCUCED LOW PROFILE CURBS SHALL UTILIZE CURB HEIGHT RUNOUT FORM 0 INCH TO 3 INCHES IN 5 FEET PAYMENT. LENGTH SHALL INCLUDE TAPERS.

* DEPTH MAY BE REDUCED IF KEYED 6" IN ROCK.

LOW PROFILE CURB

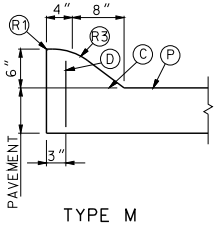

TYPE M
(INTEGRAL)

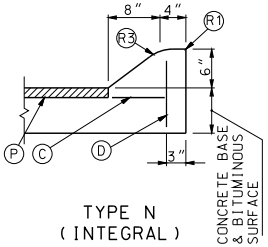

TYPE N
(INTEGRAL)

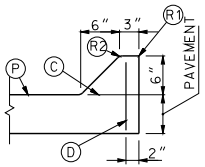

TYPE O
(INTEGRAL)

MOUNTABLE CURBS

LEGEND

- (B) TIE BARS - 30" X #5 Ø AT 30" CTRS.
- (C) PERMISSIBLE CONSTRUCTION JOINT. IF CONSTRUCTED IN THIS MANNER TIE BARS MUST BE USED.
- (D) #4 Ø TIE BAR AT 24" CENTERS LENGTH OF THE TIE BARS EQUALS THICKNESS OF PAVEMENT PLUS HEIGHT OF CURB, LESS 3 INCHES.
- (K) TONGUE & GROOVE JOINT WITH TIE BAR - SEE DETAIL.
- (P) TOP OF PAVEMENT OR CONCRETE BASE.
- (R1) ROUND TO ¼" RADIUS. (EXCEPT FOR SAWED JOINTS)
- (R2) ROUND TO ¾" RADIUS.
- (R3) CONSTRUCT TO 9" RADIUS

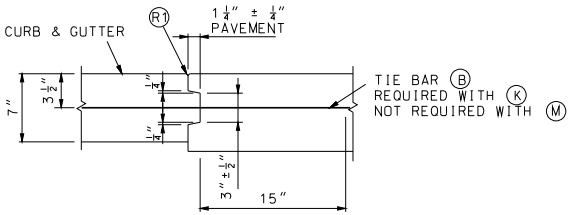

THRU TONGUE & GROOVE JOINT

MISSOURI HIGHWAYS AND TRANSPORTATION COMMISSION
105 WEST CAPITOL
JEFFERSON CITY, MO 65102
1-888-ASK-MODOT (1-888-275-6636)

STATE OF MISSOURI
KATHRYN PHILLIPS HARVEY
NUMBER PE-23751
PROFESSIONAL ENGINEER
THIS SHEET HAS BEEN SIGNED, SEALED AND DATED ELECTRONICALLY.

CONCRETE CURB, CURB AND GUTTER AND GUTTER

DATE EFFECTIVE:	08/01/2008	609.00P	SHEET NO. 2 OF 2
DATE PREPARED:	8/26/2009		

IF A SEAL IS PRESENT ON THIS SHEET IT HAS BEEN ELECTRONICALLY SEALED AND DATED.

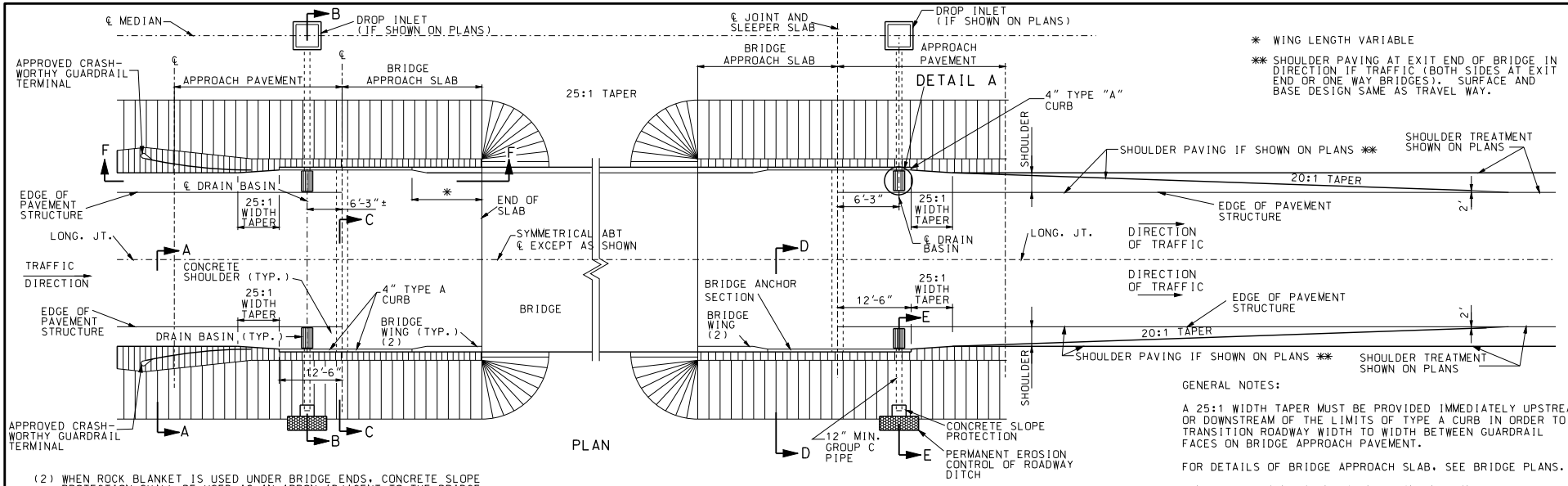

PLAN

* WING LENGTH VARIABLE

** SHOULDER PAVING AT EXIT END OF BRIDGE IN DIRECTION IF TRAFFIC (BOTH SIDES AT EXIT END OR ONE WAY BRIDGES). SURFACE AND BASE DESIGN SAME AS TRAVEL WAY.

(2) WHEN ROCK BLANKET IS USED UNDER BRIDGE ENDS, CONCRETE SLOPE PROTECTION SHALL BE USED AS AN APRON ADJACENT TO THE BRIDGE WING WALLS, AS SHOWN ON STANDARD PLAN 611.60.

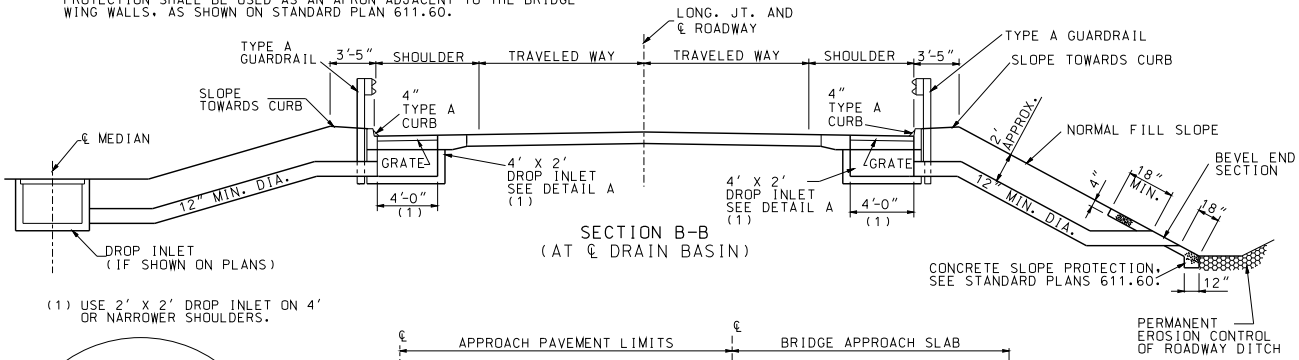

SECTION B-B
(AT ℄ DRAIN BASIN)

(1) USE 2' X 2' DROP INLET ON 4' OR NARROWER SHOULDERS.

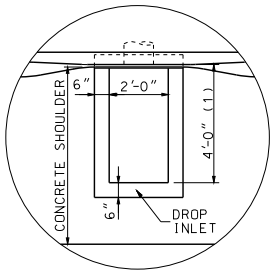

DETAIL A

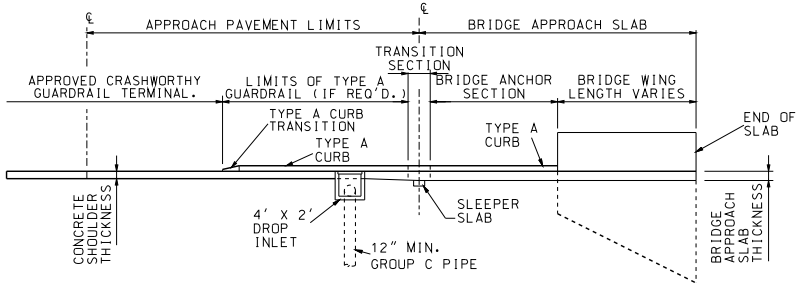

SECTION F-F

NOTE:
DETAILS OF APPROVED CRASHWORTHY GUARDRAIL TERMINAL. TYPE A GUARDRAIL, TRANSITION SECTION AND BRIDGE ANCHOR SECTION ARE NOT SHOWN FOR CLARITY.

GENERAL NOTES:

A 25:1 WIDTH TAPER MUST BE PROVIDED IMMEDIATELY UPSTREAM OR DOWNSTREAM OF THE LIMITS OF TYPE A CURB IN ORDER TO TRANSITION ROADWAY WIDTH TO WIDTH BETWEEN GUARDRAIL FACES ON BRIDGE APPROACH PAVEMENT.

FOR DETAILS OF BRIDGE APPROACH SLAB, SEE BRIDGE PLANS.

CONSTRUCT DRAIN BASINS WHEN SHOWN ON PLANS.

TYPE A CURB IS TO BE CONSTRUCTED ON CONCRETE APPROACH PAVEMENT ONLY WHEN DRAIN BASINS ARE REQUIRED. SEE STANDARD PLANS 609.00 FOR TYPE A CURB.

SEE STANDARD PLANS 504.00 FOR DETAILS OF CONCRETE APPROACH PAVEMENT.

FOR DETAILS OF GRATES, BEARING PLATES FOR DROP INLET, SEE STANDARD PLANS 614.10 AND 614.11.

IF REQUIRED, TYPE A GUARDRAIL SHALL BE USED FROM THE END OF THE TRANSITION SECTION FOR THE BRIDGE ANCHOR SECTION TO THE TERMINATION OF THE TYPE A CURB.

SEE STANDARD PLANS 731.10 FOR DETAILS OF DROP INLET. USE TYPE A FOR LOCATION OF DROP INLET. DEPTH OF DROP INLET AS SHOWN ON ROADWAY PLANS.

PAYMENT FOR DROP INLET, GRATE, GROUP C PIPE, CONCRETE SLOPE PROTECTION AT PIPE OUTLETS, MATERIAL AND INSTALLATION WILL BE PAID FOR AT THE CONTRACT UNIT PRICE FOR DRAIN BASIN PER EACH.

FOR DETAILS OF SECTION A-A, C-C, D-D AND E-E, SEE SHEET 2 OF 2.

MISSOURI HIGHWAYS AND TRANSPORTATION COMMISSION
105 WEST CAPITOL
JEFFERSON CITY, MO 65102
1-888-ASK-MODOT (1-888-275-6636)

STATE OF MISSOURI
KATHRYN PHILLIPS HARVEY
NUMBER PE-23751
PROFESSIONAL ENGINEER
THIS SHEET HAS BEEN SIGNED, SEALED AND DATED ELECTRONICALLY.

DRAIN BASIN, SHOULDER PAVING AND FILL SLOPES AT BRIDGE ENDS

DATE EFFECTIVE:	02/01/2009	609.40P	SHEET NO.
DATE PREPARED:	9/3/2010		1 OF 2

IF A SEAL IS PRESENT ON THIS SHEET IT HAS BEEN ELECTRONICALLY SEALED AND DATED.

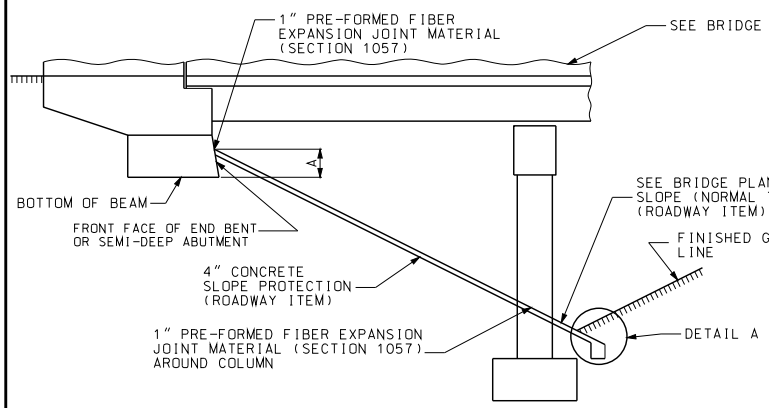

ELEVATION
(STRAIGHT SLOPE TYPE)

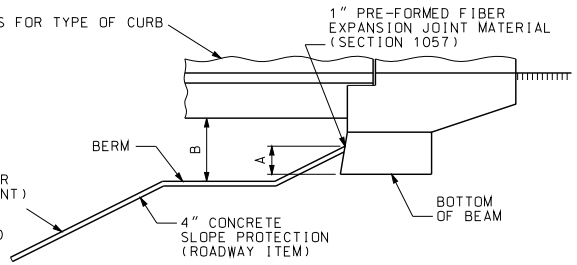

ELEVATION
(USE ON STRUCTURES WITHOUT PASSIVE PRESSURE BERM)

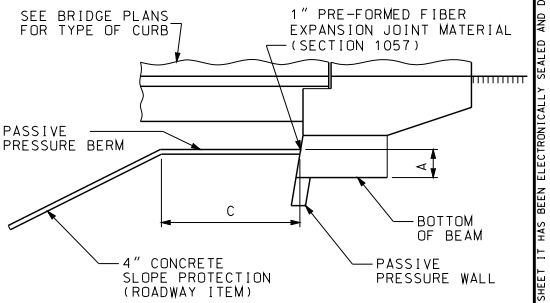

ELEVATION
(USE ON STRUCTURES WITH PASSIVE PRESSURE BERM)

A - SEE BRIDGE PLANS

B - BERM SHALL BE CONSTRUCTED TO ELEVATION SHOWN ON PLANS WITH A MINIMUM OF 4'-0" BELOW BOTTOM OF SUPERSTRUCTURE.

C - DIMENSION OF BERM (SEE BRIDGE PLANS).

(1) SLOPE $\frac{1}{4}$" PER FOOT MINIMUM.
(2) PROTECTION SHALL BE PLACED IN CONTINUOUS PANELS FROM TOE OF THE SLOPE TO THE TOP OF THE SLOPE.
(3) SLOPE PROTECTION SHALL FOLLOW THE CONTOUR OF THE FINAL ROADWAY FILL.

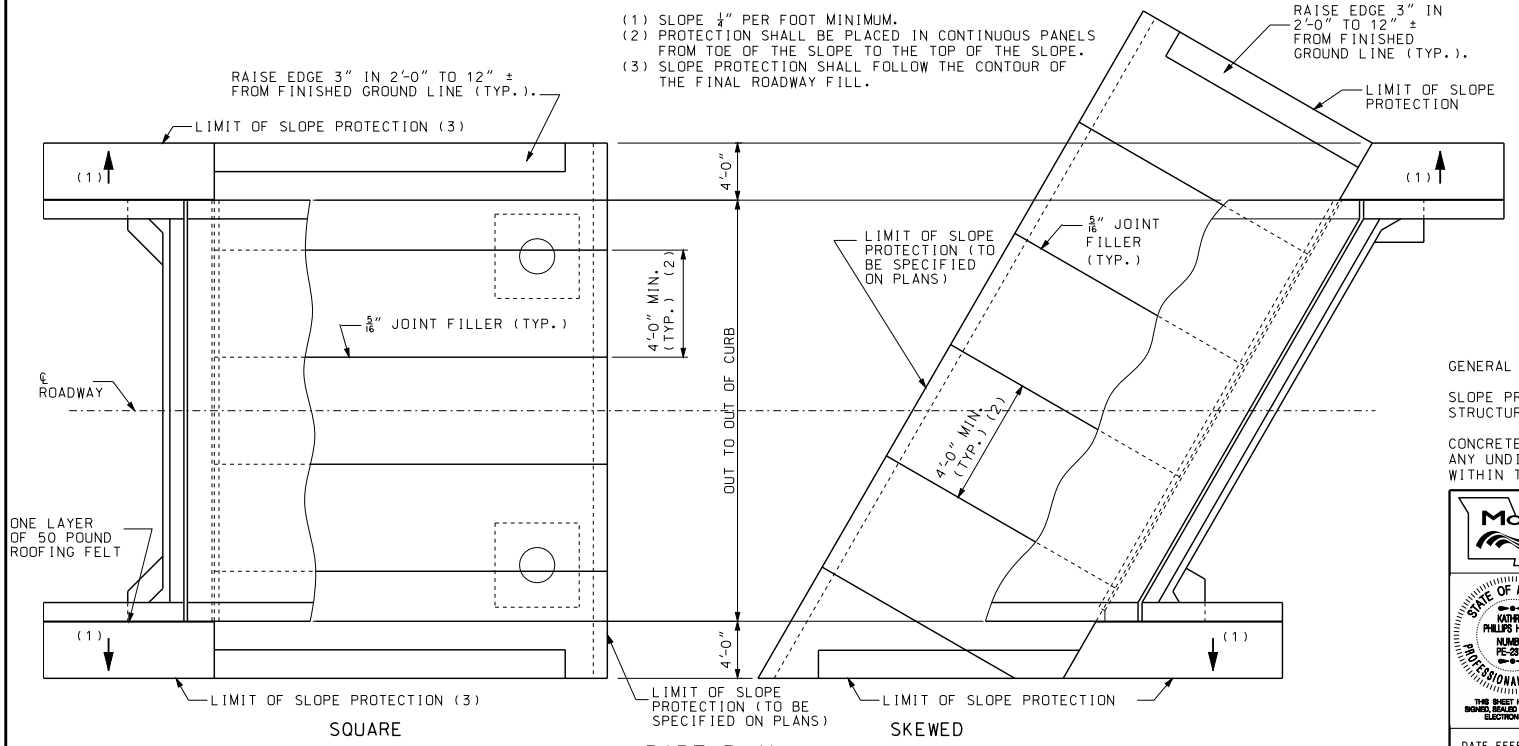

PART PLAN

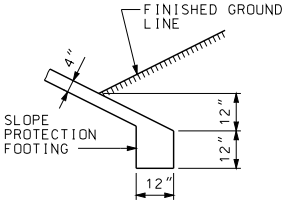

DETAIL A

NOTE:
IF SLOPE PROTECTION FOOTING FALLS ON OR AROUND OTHER FOOTINGS, ONE LAYER OF 50# ROOFING FELT SHALLBE PLACED BETWEEN CONTACT SURFACES OF FOOTINGS.

GENERAL NOTES:

SLOPE PROTECTION SHALL BE MADE CONTINUOUS BETWEEN STRUCTURES WHEN MEDIAN IS 60' OR LESS.

CONCRETE SLOPE PROTECTION SHALL BE FORMED AROUND ANY UNDISTURBED ROCK THAT IS PERMITTED TO REMAIN WITHIN THE SLOPE PROTECTION AREA.

MISSOURI HIGHWAYS AND TRANSPORTATION COMMISSION
105 WEST CAPITOL
JEFFERSON CITY, MO 65102
1-888-ASK-MODOT (1-888-275-6636)

STATE OF MISSOURI
KATHRYN PHILLIPS HARVEY
NUMBER PE-23751
PROFESSIONAL ENGINEER
THIS SHEET HAS BEEN SIGNED, SEALED AND DATED ELECTRONICALLY.

CONCRETE SLOPE PROTECTION

DATE EFFECTIVE: 01/01/2005
DATE PREPARED: 9/3/2010

611.600

SHEET NO. 1 OF 1

IF A SEAL IS PRESENT ON THIS SHEET IT HAS BEEN ELECTRONICALLY SEALED AND DATED.

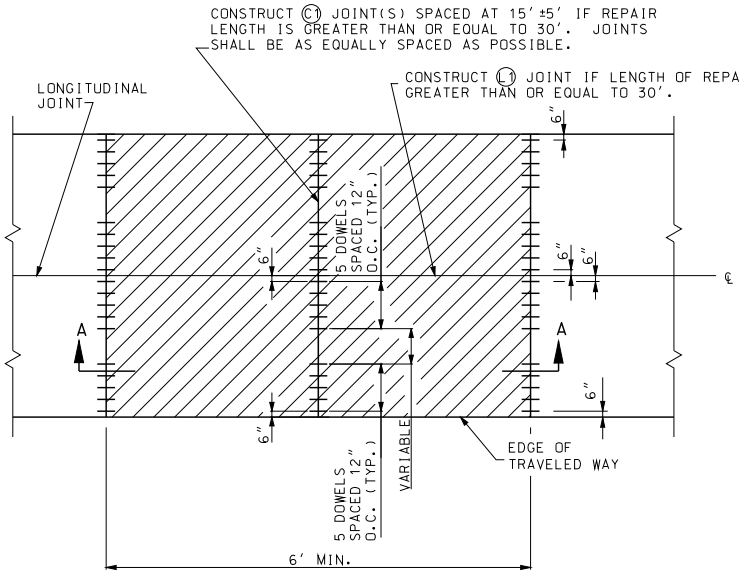

TWO OR MORE LANES

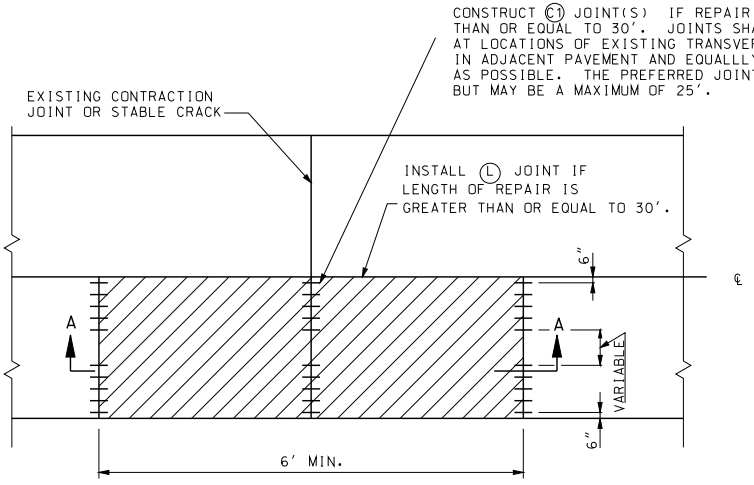

ONE LANE

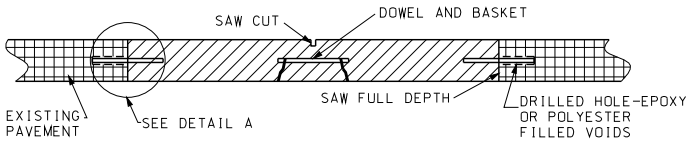

SECTION A-A

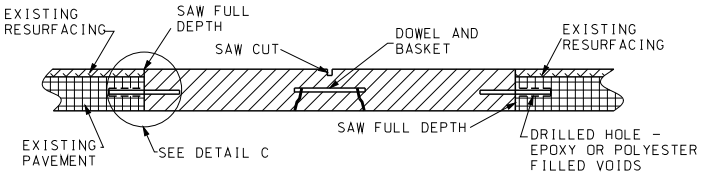

SECTION A-A ALTERNATE
WITH ASPHALT OVERLAY

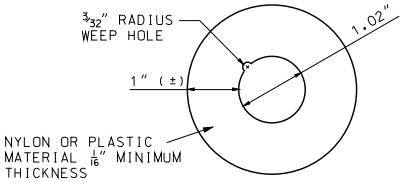

DETAIL B
THIN CIRCULAR DISK

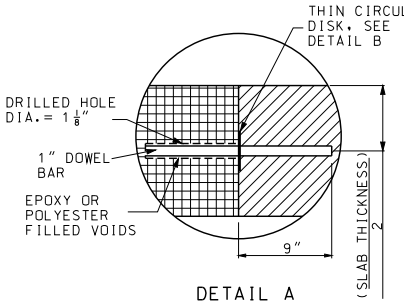

DETAIL A

1. SMOOTH EPOXY COATED DOWELS SHALL BE USED IN ALL FULL DEPTH PAVEMENT REPAIR TRANSVERSE JOINTS.
2. THE ANCHORING MATERIAL (EPOXY OR POLYESTER) SHALL BE PLACED TO THE BACK OF THE PREDRILLED HOLE BEFORE INSERTING THE DOWEL BAR.
3. THE DOWEL IS INSERTED INTO THE HOLE WITH A TWISTING MOTION SO THAT THE MATERIAL IN THE BACK OF THE HOLE IS FORCED UP AND AROUND THE BAR.
4. EXPOSED END OF DOWEL SHALL BE COATED WITH A THIN UNIFORM COAT OF GRAPHITE GREASE. DOWEL BASKET ASSEMBLIES SHALL BE CONSTRUCTED IN ACCORDANCE WITH STANDARD PLAN 502.10. IN LIEU OF GRAPHITE GREASE, THE DOWEL BAR BASKET SUPPLIER MAY PROVIDE COMPLETED BASKET UNITS PRE-DIPPED IN AN APPROVED BONDBREAKER.
5. REPAIR ONLY ONE LANE AT A TIME.

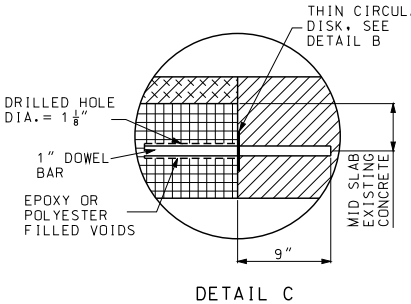

DETAIL C

GENERAL NOTES:

ALL SAW CUTS SHALL BE MADE WITH A DIAMOND SAW EXCEPT THE CENTER RELIEF CUT.

FOR DETAILS OF TYPE C, L AND L1 JOINTS. SEE STANDARD PLAN 502.05.

NON-REINFORCED AND REINFORCED PORTLAND CEMENT CONCRETE

MISSOURI HIGHWAYS AND TRANSPORTATION COMMISSION
105 WEST CAPITOL
JEFFERSON CITY, MO 65102
1-888-ASK-MODOT (1-888-275-6636)

STATE OF MISSOURI
KATHRYN PHILLIPS HARVEY
NUMBER PE-23751
PROFESSIONAL ENGINEER
THIS SHEET HAS BEEN SIGNED, SEALED AND DATED ELECTRONICALLY.

PAVEMENT REPAIR
FULL DEPTH

DATE EFFECTIVE: 06/01/2010	613.00P	SHEET NO.
DATE PREPARED: 4/1/2010		1 OF 3

IF A SEAL IS PRESENT ON THIS SHEET IT HAS BEEN ELECTRONICALLY SEALED AND DATED.

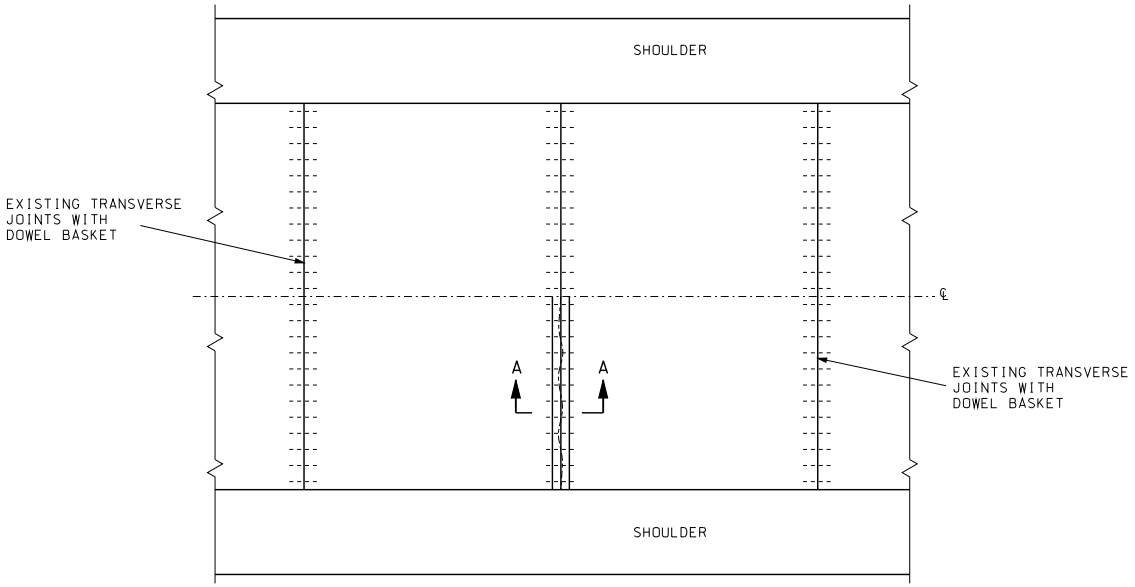

PLAN VIEW

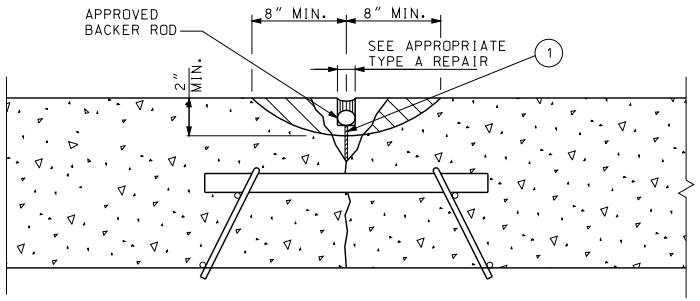

SECTION A-A
MILLING OPTIONS

AREA TO BE REMOVED

(1) THE INITIAL RE-ESTABLISHMENT OF THE JOINT OR CRACK IN THE PLASTIC CONCRETE SHALL BE ACCOMPLISHED WITH AN APPROVED CUTTER BAR OR WITH MINIMUM 1/4" COMPRESSION RELIEF MATERIAL (SAWING NOT ALLOWED).

JOINT COMPRESSION RELIEF TO THE TOP OF THE DOWEL BARS SHALL BE PROVIDED BY A MINIMUM 1/4" SAWCUT AS SOON AS POSSIBLE AFTER INITIAL SET OR MINIMUM 1/4" COMPRESSION RELIEF MATERIAL AS NOTED ABOVE.

GENERAL NOTES:

THE LIMITS OF THE REMOVAL AREA WILL BE DEFINED BY THE ENGINEER.

ALL CONCRETE SHALL BE REMOVED TO LIMITS SHOWN IN THE DETAIL, INCLUDING DETERIORATED CONCRETE TO A MAXIMUM OF 1/2 THE PAVEMENT DEPTH OR TOP OF DOWELS BY MILLING.

EXPOSED SURFACE SHALL BE CLEANED BY SANDBLASTING, HIGH-PRESSURE WATER BLASTING OR OTHER METHODS APPROVED BY THE ENGINEER.

EXPOSED SURFACES OF DOWELS, IF ANY, SHALL BE COATED WITH AN APPROVED BOND BREAKER.

JOINTS AND CRACKS SHALL BE SEALED WITH APPROPRIATE SEALER.

MISSOURI HIGHWAYS AND TRANSPORTATION COMMISSION
105 WEST CAPITOL
JEFFERSON CITY, MO 65102
1-888-ASK-MODOT (1-888-275-6636)

STATE OF MISSOURI
KATHRYN PHILLIPS HARVEY
NUMBER PE-23751
PROFESSIONAL ENGINEER
THIS SHEET HAS BEEN SIGNED, SEALED AND DATED ELECTRONICALLY.

PAVEMENT REPAIR
PARTIAL DEPTH AT JOINTS AND CRACKS CLASS A

DATE EFFECTIVE: 06/01/2010
DATE PREPARED: 4/1/2010

613.00P

SHEET NO. 2 OF 3

IF A SEAL IS PRESENT ON THIS SHEET IT HAS BEEN ELECTRONICALLY SEALED AND DATED.

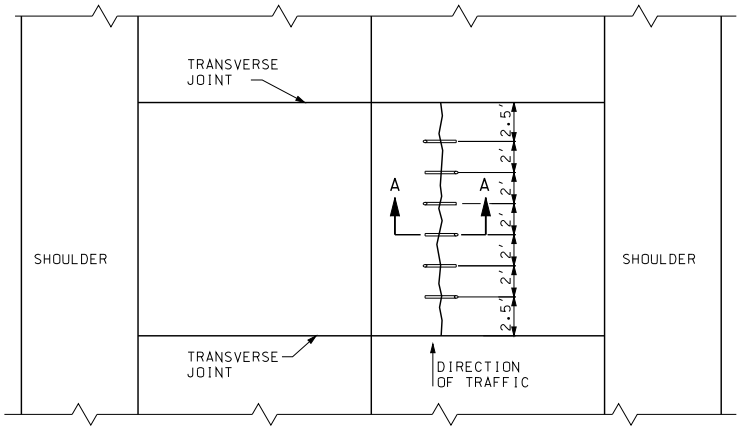

CROSS STITCHING PLAN

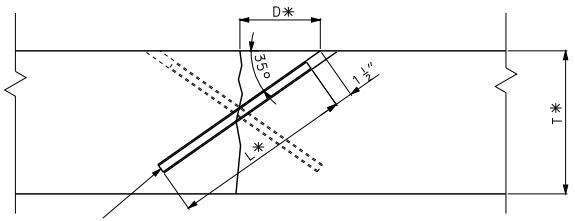

* SEE TABLE

T	SLAB THICKNESS (IN)	8	9	10	11	12
D	DISTANCE TO HOLE (IN)	5 3/4	6 1/2	7 1/4	8 1/2	8 1/2
L	LENGTH OF BAR (IN)	8 1/2	11	12 1/2	14	16

SECTION A-A

GENERAL NOTES:

AT EACH REPAIR LOCATION, HOLES SHALL BE DRILLED AT 35° ANGLES TO THE PAVEMENT SURFACE, PERPENDICULAR TO THE CRACK. THE DRILL BIT DIAMETER SHALL NOT EXCEED 1 1/8".

DRILLING SHALL ALTERNATE BACK AND FORTH ON EITHER SIDE OF THE LONGITUDINAL JOINT FROM HOLE TO HOLE.

DRILLED HOLES SHALL NOT PENETRATE THROUGH THE SLAB BOTTOM.

DRILLED HOLES SHALL BE CLEANED OF LOOSE DEBRIS AND DUST. EPOXY OR POLYESTER BONDING AGENTS FOR DOWELS, MEETING THE MATERIAL REQUIREMENTS OF SECTION 1039, SHALL BE INJECTED OR POURED INTO EACH HOLE. A CROSS-STITCH BAR SHALL BE INSERTED IN EACH HOLE SUCH THAT THE EPOXY MATERIAL IS EVENLY DISTRIBUTED AROUND THE BAR AND EXTRUDING FROM THE SURFACE OPENING. EACH BAR SHALL BE INSERTED FAR ENOUGH TO ALLOW 1½" OF COVER AS SHOWN IN THE PROFILE DETAIL.

THE SURFACE SHALL HAVE ALL EXCESS EPOXY REMOVED AND HAVE A FLUSH FINISH.
GENERAL NOTES:

MISSOURI HIGHWAYS AND TRANSPORTATION COMMISSION
105 WEST CAPITOL
JEFFERSON CITY, MO 65102
1-888-ASK-MODOT (1-888-275-6636)

STATE OF MISSOURI
KATHRYN PHILLIPS HARVEY
NUMBER PE-23751
PROFESSIONAL ENGINEER
THIS SHEET HAS BEEN SIGNED, SEALED AND DATED ELECTRONICALLY.

PAVEMENT REPAIR
CROSS STITCHING

DATE EFFECTIVE: 06/01/2010
DATE PREPARED: 4/1/2010

613.00P

SHEET NO. 3 OF 3

IF A SEAL IS PRESENT ON THIS SHEET IT HAS BEEN ELECTRONICALLY SEALED AND DATED.

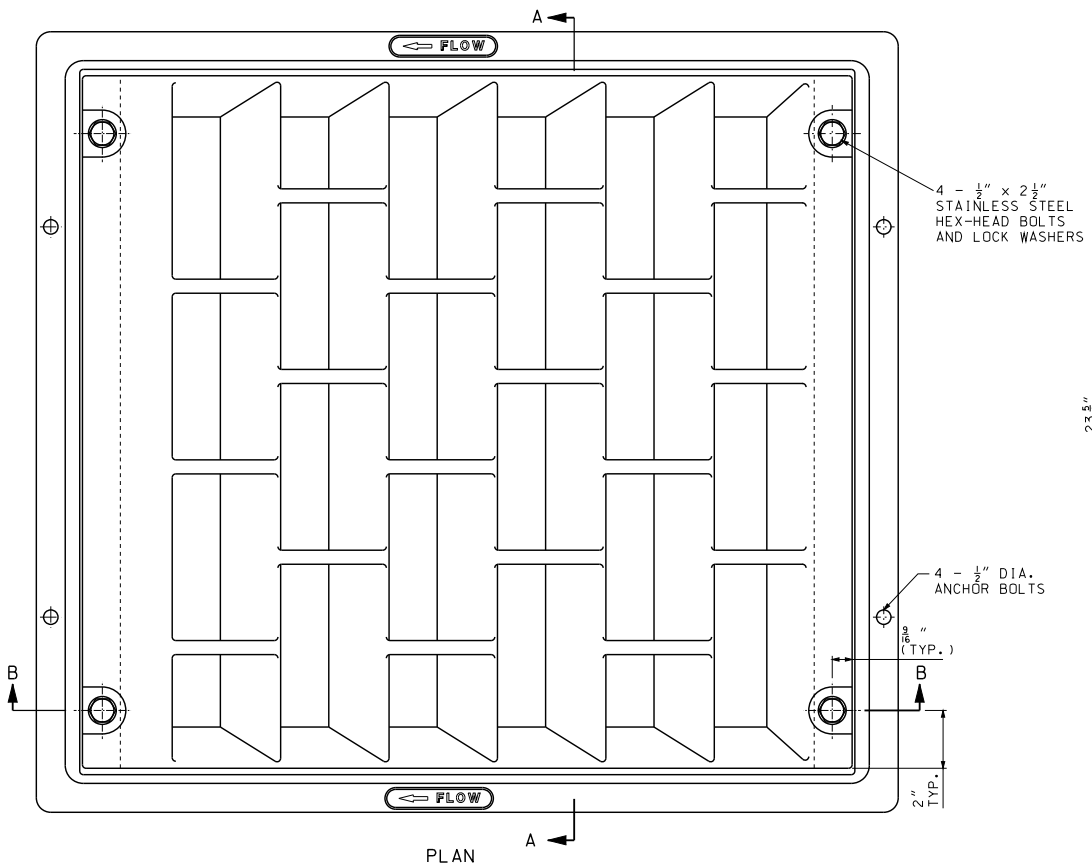

PLAN

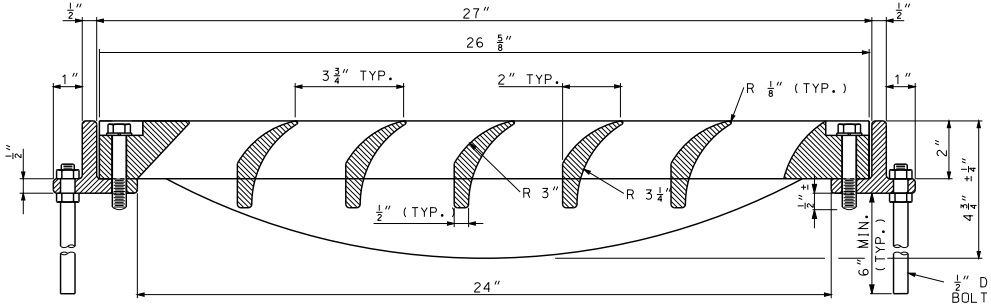

SECTION B-B

(*) ½" DIA. ANCHOR BOLTS, NUTS, AND WASHERS SHALL BE GALVANIZED IN ACCORDANCE WITH AASHTO M 232 OR SHALL BE MECHANICALLY GALVANIZED. IF MECHANICALLY GALVANIZED, THE COATING THICKNESS, ADHERENCE AND QUALITY REQUIREMENTS SHALL BE IN ACCORDANCE WITH AASHTO M 232, CLASS C. DAMAGED SPELTER COATING SHALL BE REPAIRED IN ACCORDANCE WITH SEC 1081.

½" DIA. ANCHOR BOLT (TYP.)(*)

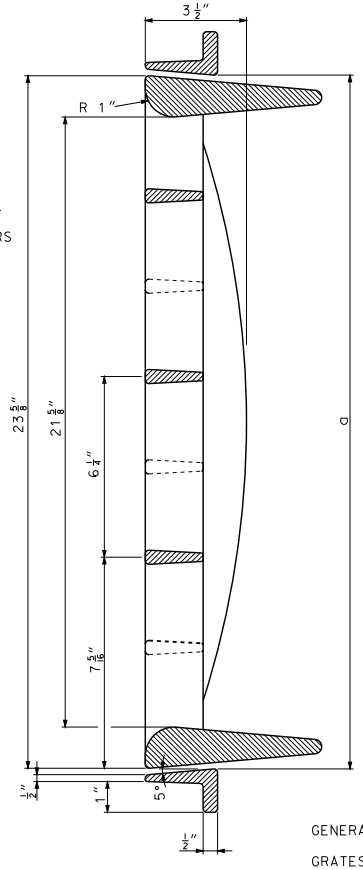

SECTION A-A

NOMINAL DIMENSIONS AND WEIGHTS					
OPENING		a	WEIGHT (LB.)	NUMBER OF	
WIDTH	LENGTH			ANCHOR BOLTS	STAINLESS STEEL BOLTS
2'-0"	2'-0"	24"	200	4	4
4'-0"	2'-0"	48"	348	8	8

NOTE: TWO 2' X 2' GRATES MAY BE USED IN LIEU OF SINGLE 4' X 2' GRATES.

INSTALLATION INSTRUCTIONS:

DRILL AND TAP FRAME.

INSTALL ½" DIA. BOLTS WITHOUT WASHERS BEFORE CONCRETE POUR TO FORM ½"± BOLT EXTENSION INTO CONCRETE BELOW FRAME. LUBRICATE EXPOSED THREADS.

AFTER CONCRETE HARDENS SUFFICIENTLY, FINAL INSTALLATION SHALL REMOVE AND REINSTALL ½" DIA. BOLTS AND LOCK WASHERS THROUGH GRATE AND FRAME. TORQUE ½" DIA. BOLTS TO 35-40 FT. LB. APPLY THREAD ADHESIVE TO ALL ½" DIA. STAINLESS STEEL BOLTS.

GENERAL NOTES:

GRATES TO BE CONSTRUCTED OF CAST GRAY IRON AND MEET REQUIREMENTS OF AASHTO M 306. MINOR VARIATIONS IN VANE SHAPE TO MEET MANUFACTURER'S STANDARD PRACTICE ARE PERMITTED.

MINIMUM CLEAR OPEN AREA: 2.10 SQUARE FEET.

MISSOURI HIGHWAYS AND TRANSPORTATION COMMISSION
105 WEST CAPITOL
JEFFERSON CITY, MO 65102
1-888-ASK-MODOT (1-888-275-6636)

STATE OF MISSOURI
KATHRYN PHILLIPS HARVEY
NUMBER PE-2007051
PROFESSIONAL ENGINEER
THIS SHEET HAS BEEN SIGNED, SEALED AND DATED ELECTRONICALLY.

CURVED VANE GRATE AND FRAME

DATE EFFECTIVE:	06/01/2010	614.11C	SHEET NO.
DATE PREPARED:	7/3/2013		1 OF 1

IF A SEAL IS PRESENT ON THIS SHEET IT HAS BEEN ELECTRONICALLY SEALED AND DATED.

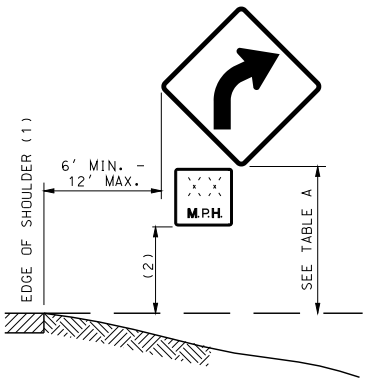

(1) EDGE OF TRAVELED WAY WHERE THERE IS NO PAVED OR STABILIZED SHOULDER.
(2) ONE-FOOT LESS THAN MOUNTING HEIGHT NOTED IN TABLE A.

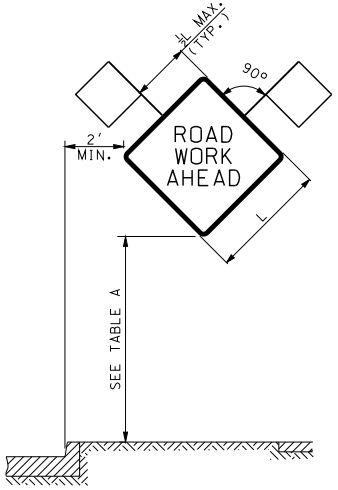

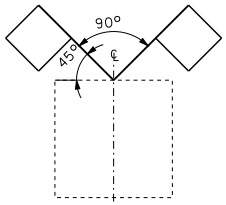

HEIGHT AND LATERAL LOCATIONS FOR POST AND PORTABLE SIGN MOUNTING

TYPE	SIGN SUPPORT	SIGN SUBSTRATE	MINIMUM MOUNTING HEIGHT(3)	USAGE LIMITATIONS	COMMENTS
POST	PERFORATED SQUARE STEEL TUBE U-CHANNEL WOOD	RIGID	5' RURAL UNDIVIDED HIGHWAYS 7' RURAL DIVIDED HIGHWAYS 7' URBAN HIGHWAYS	NONE	POSTS SHALL BE FREE OF ANY BRACING AND EXTEND NO FURTHER ABOVE THE SIGN EXCEPT AS NEEDED FOR WARNING LIGHT ATTACHMENT. SEE STANDARD PLAN 903.03 FOR POST INSTALLATION DETAILS. GALVANIZATION OF POSTS WILL NOT BE REQUIRED.
TYPE 1 PORTABLE	SKID FOLD-UP STAND	RIGID	5' RURAL UNDIVIDED HIGHWAYS 7' RURAL DIVIDED HIGHWAYS 7' URBAN HIGHWAYS	PERMITTED ONLY WHERE POST MOUNTING IS NOT FEASIBLE.	SYSTEMS SHALL COMPLY WITH CRASH TEST REQUIREMENTS OF NCHRP 350 TEST LEVEL 3 AND MAY BE PLACED ADJACENT TO OR WITHIN THE ROADWAY PROVIDED A MINIMUM LATERAL CLEARANCE OF 3 FEET, MEASURED HORIZONTALLY FROM THE EDGE OF THE SIGN TO THE EDGE OF DESIGNATED TRAVELED WAY, IS MAINTAINED.
TYPE 2 PORTABLE	EASEL FOLD-UP STAND SELF-DRIVING POST TYPE III MOVABLE BARRICADE SKID	FLEXIBLE RIGID	12"(4)	PERMITTED ONLY FOR INSTALLATION UP TO 3 DAYS(5). WHERE SIGNS ARE OBSCURED BY OTHER OBJECTS (I.E., TRAFFIC CONTROL DEVICES, PARKED VEHICLES, BARRIER, VEGETATION, ETC.) OR INSTALLED ON MULTI-LANE UNDIVIDED FACILITIES OR MULTI-LANE DIVIDED FACILITIES WITH 3 OR MORE LANES IN ONE DIRECTION, MOUNTING HEIGHTS SHALL BE AS SPECIFIED FOR POST-MOUNTED SIGNS.	SYSTEMS SHALL COMPLY WITH CRASH TEST REQUIREMENTS OF NCHRP 350 TEST LEVEL 3 AND MAY BE PLACE ADJACENT TO OR WITHIN ROADWAY PROVIDED A MINIMUM LATERAL CLEARANCE OF 3 FEET, MEASURED HORIZONTALLY FROM THE EDGE OF THE SIGN TO THE EDGE OF THE DESIGNATED TRAVELED WAY, IS MAINTAINED.
BARRIER	CONCRETE TRAFFIC BARRIER GUARDRAIL	FLEXIBLE RIGID	5' RURAL UNDIVIDED HIGHWAYS 7' RURAL DIVIDED HIGHWAYS 7' URBAN HIGHWAYS	PERMITTED ONLY WHERE LONGITUDINAL BARRIER IS PRESENT.	SYSTEMS SHALL PROVIDE POSITIVE CONNECTION TO THE BARRIER AND MINIMIZE POTENTIAL FOR VEHICLE SNAGGING.
VEHICLE	PAVEMENT MARKING EQUIPMENT PILOT CAR PROTECTIVE VEHICLE	FLEXIBLE RIGID	48" (6)	PERMITTED ONLY IN PILOT CAR OR MOVING OPERATIONS.	

(3) MEASURED FROM THE BOTTOM OF THE SIGN TO THE NEAR EDGE OF THE PAVEMENT.
(4) MOUNTING HEIGHTS FOR REGULATORY AND GUIDE SIGNS SHALL BE AS SPECIFIED FOR POST-MOUNTED SIGNS.
(5) SIGNS MOUNTED ON TYPE III BARRICADES, GORE EXIT SIGN, AND SIGNS FOR CROSWALK/SIDEWALK CLOSURES MAY BE LEFT IN PLACE FOR MORE THAN 3 DAYS.
(6) DEVIATIONS AS APPROVED BY THE ENGINEER.

TABLE A
WORK ZONE SIGN MOUNTING REQUIREMENTS

SIGN AREA (SQ.FT.)	POST TYPE		
	U-CHANNEL	WOOD	PERF. SQUARE STEEL TUBING
≤ 10	1 - 3.0 LB./FT.*	1 - 4" X 4"*	1 - 2" 12 GA.*
> 10 ≤ 16	2 - 3.0 LB./FT.	2 - 4" X 4" 1 - 4" X 6"*	2 - 2" 12 GA.
> 16 ≤ 24	2 - 3.0 LB./FT.	2 - 4" X 6"	3 - 2" 12 GA.**
> 24 ≤ 30	3 - 3.0 LB./FT.	2 - 4" X 6"	N/A
> 30 ≤ 50	N/A	2 - 6" X 6"	N/A

* SIGNS GREATER THAN 4 FEET IN WIDTH, EXCEPT DIAMOND SHAPE SIGNS, REQUIRE TWO POSTS.

** REQUIRES SLIP BASE PER MANUFACTURER'S RECOMMENDATION.

TABLE B
POST SIZE REQUIREMENTS

GENERAL NOTES:

LONGITUDINAL SPACING OF SIGNS SHOWN IN THE PLANS ARE PREFERRED MINIMUMS, BUT MAY BE ADJUSTED TO MEET EXISTING FIELD CONDITIONS WITH APPROVAL FROM THE ENGINEER.

SIGNS SHALL NOT BE MOUNTED IN OR ON CHANNELIZERS.

ALL POSTS AND SIGNS SHALL BE INSTALLED AND MAINTAINED IN A PLUMB POSITION.

CONSTRUCTION SIGNS SHALL NOT BE LOCATED ON SIDEWALKS, BICYCLE LANES, OR AREAS DESIGNATED FOR PEDESTRIAN OR BICYCLE TRAFFIC.

ALL BATTERY PACKS SEPARATE FROM WARNING LIGHT SHALL BE MOUNTED ON A SUPPORT POST NO HIGHER THAN 18" ABOVE GROUND LINE. IF USED, WARNING LIGHTS SHALL NOT COVER ANY PORTION OF THE SIGN FACE.

MISSOURI HIGHWAYS AND TRANSPORTATION COMMISSION
105 WEST CAPITOL
JEFFERSON CITY, MO 65102
1-888-ASK-MODOT (1-888-275-6636)

STATE OF MISSOURI
KATHRYN PHILLIPS HARVEY
NUMBER PE-23751
PROFESSIONAL ENGINEER
THIS SHEET HAS BEEN SIGNED, SEALED AND DATED ELECTRONICALLY.

TEMPORARY TRAFFIC CONTROL DEVICES
SIGN MOUNTING REQUIREMENTS

DATE EFFECTIVE: 08/01/2012
DATE PREPARED: 8/15/2012

616.10A0

SHEET NO. 1 OF 8

IF A SEAL IS PRESENT ON THIS SHEET IT HAS BEEN ELECTRONICALLY SEALED AND DATED.

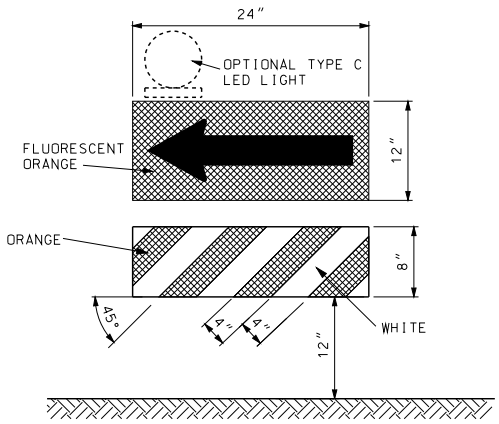

DIRECTION INDICATOR BARRICADE

VERTICAL DIMENSIONS DO NOT INCLUDE PROJECTIONS DESIGNED FOR EASE OF HANDLING.

DIRECTION INDICATOR BARRICADES SHALL NOT BE USED IN SHIFTING TAPERS UNLESS SHOWN ON THE PLANS.

THE PANELS SHALL BE SECURELY ATTACHED TO A SUPPORT THAT IS PORTABLE, CAPABLE OF REMAINING UPRIGHT AND ENTIRELY FREE STANDING.

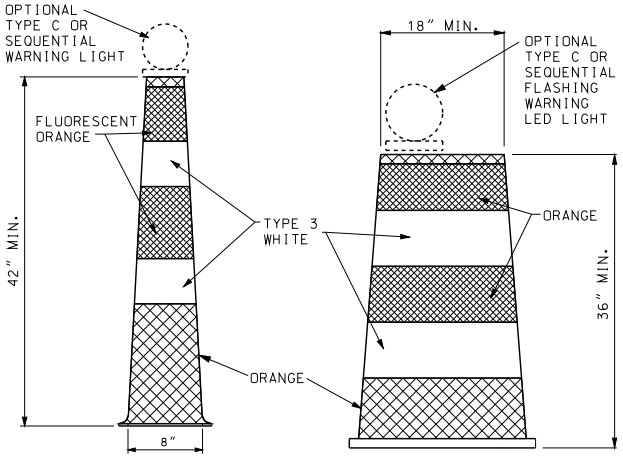

CHANNELIZERS

REFLECTIVE SHEETING APPLIED TO CHANNELIZERS SHALL BE REBOUNDABLE MEETING ASTM D 4956.

STRIPES ON TRIM-LINE CHANNELIZERS SHALL BE 6" TO 8".
STRIPES ON DRUM-LIKE CHANNELIZERS SHALL BE 4" TO 6".

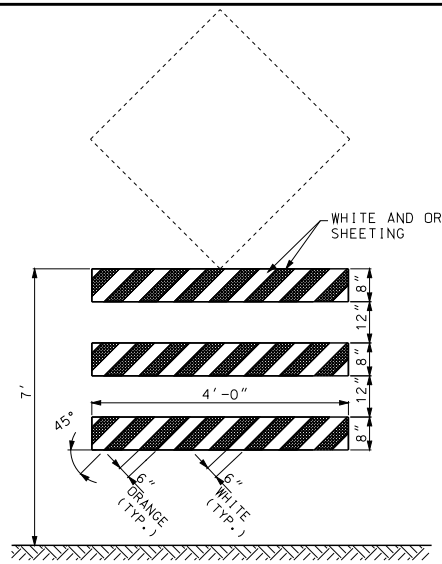

ADVANCE WARNING RAIL SYSTEM

MAXIMUM WEIGHT OF SIGN SHALL NOT EXCEED 25 LBS.

THE SIGN AND RAIL SYSTEM MAY BE MOUNTED AS TWO SEPARATE CRASHWORTHY DEVICES. THE RAIL SYSTEM SHALL BE LOCATED DIRECTLY IN FRONT OF THE SIGN WITH 7 TO 10 FEET SEPARATING THE TWO DEVICES.

WHERE MARKING IS NOT PROVIDED ON THE BACKSIDE, STRIPS OF 3" WIDE MODOT TYPE 7 ORANGE SHEETING MAY BE APPLIED TO THE ENDS OF EACH RAIL TO HELP DELINEATE THE DEVICE.

WHITE AND ORANGE REFLECTIVE SHEETING SHALL BE IN ACCORDANCE WITH SEC 1042.2.7.3.

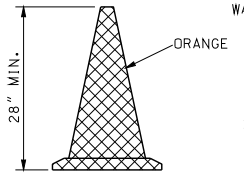

CONE

CONES SHALL MAINTAIN THEIR SHAPE UPON EXPOSURE TO NORMAL WORK CONDITIONS.

CONES SHALL BE USED DURING DAYLIGHT HOURS ONLY.

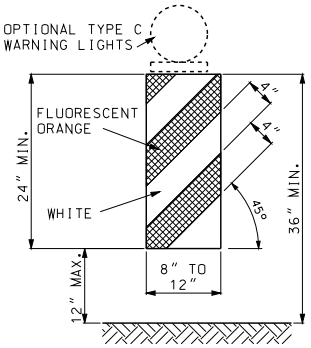

VERTICAL PANEL

VERTICAL PANELS SHALL BE SECURELY ATTACHED TO A SUPPORT THAT IS PORTABLE, CAPABLE OF REMAINING UPRIGHT AND ENTIRELY FREE STANDING.

GENERAL NOTES:

FLUORESCENT ORANGE REFLECTIVE SHEETING SHALL IN ACCORDANCE WITH SEC 1042.2.7.3.

BALLAST FOR TRAFFIC CONTROL DEVICES SHALL CONFORM TO MANUFACTURERS' RECOMMENDATION FOR FIELD CONDITIONS WHEN APPLICABLE.

WHITE AND ORANGE REFLECTIVE SHEETING SHALL BE IN ACCORDANCE WITH SEC 1042.2.7.2.

IF REQUIRED BY THE ENGINEER OR SPECIFIED ON THE PLANS, EACH DIRECTION INDICATOR BARRICADE, CHANNELIZER, AND VERTICAL PANEL SHALL BE EQUIPPED WITH ONE TYPE C OR SEQUENTIAL FLASHING WARNING PORTABLE LIGHT UNIT. IF USED, THE LIGHT UNIT AND BATTERY COMPARTMENT SHALL BE FURNISHED BY THE DEVICE MANUFACTURER OR OTHERWISE MEET THE MANUFACTURER'S RECOMMENDATIONS FOR DESIGN AND WILL BE REQUIRED ON ALL DEVICES IN THE SERIES.

UPON APPROVAL OF THE ENGINEER, THE CONTRACTOR MAY, AT NO ADDITIONAL COST, USE DRUM-LIKE CHANNELIZERS IN LIEU OF TRIM-LINE CHANNELIZERS TO PROVIDE LONGITUDINAL CHANNELIZATION WITHIN THE ACTIVITY AREA WHERE NO RAMPS, INTERSECTIONS OR LIMITED LATERAL CLEARANCE EXISTS.

UPON APPROVAL OF THE ENGINEER, THE CONTRACTOR MAY, AT NO ADDITIONAL COST, USE DIRECTION INDICATOR BARRICADES IN LIEU OF TRIM-LINE CHANNELIZERS IN MERGING TAPERS.

UPON APPROVAL OF THE ENGINEER, THE CONTRACTOR MAY, AT NO ADDITIONAL COST, USE VERTICAL PANELS IN LIEU OF TRIM-LINE CHANNELIZERS TO PROVIDE LONGITUDINAL CHANNELIZATION WITHIN THE ACTIVITY AREA.

UPON APPROVAL OF THE ENGINEER, THE CONTRACTOR MAY, AT NO ADDITIONAL COST, USE CONES IN LIEU OF TRIM-LINE CHANNELIZERS DURING DAYTIME OPERATIONS ON MINOR ROUTES.

PANEL AND RAIL MARKINGS FOR TRAFFIC DELINEATION SHALL SLOPE DOWNWARD TOWARD THE INTENDED DIRECTION OF TRAVEL. ILLUSTRATIONS SHOWN ARE FOR INSTANCES WHERE TRAFFIC MOVES TO THE LEFT, REVERSE CONFIGURATIONS SHALL BE USED FOR TRAFFIC MOVEMENTS TO THE RIGHT. MARKINGS SHALL ONLY BE APPLIED TO THE FRONT OF EACH RAIL OR PANEL, OR MAY BE APPLIED TO BOTH THE FRONT AND BACK PROVIDING THE MARKING ON THE BACK DOES NOT CONFLICT WITH INTENDED OPPOSING TRAFFIC MOVEMENT.

MISSOURI HIGHWAYS AND TRANSPORTATION COMMISSION
105 WEST CAPITOL
JEFFERSON CITY, MO 65102
1-888-ASK-MODOT (1-888-275-6636)

STATE OF MISSOURI
KATHRYN PHILLIPS HARVEY
NUMBER PE-23751
PROFESSIONAL ENGINEER
THIS SHEET HAS BEEN SIGNED, SEALED AND DATED ELECTRONICALLY.

TEMPORARY TRAFFIC CONTROL DEVICES

CHANNELIZERS AND DIRECTION INDICATOR BARRICADE

DATE EFFECTIVE:	08/01/2012	616.10A0	SHEET NO.
DATE PREPARED:	7/19/2012		2 OF 8

IF A SEAL IS PRESENT ON THIS SHEET IT HAS BEEN ELECTRONICALLY SEALED AND DATED.

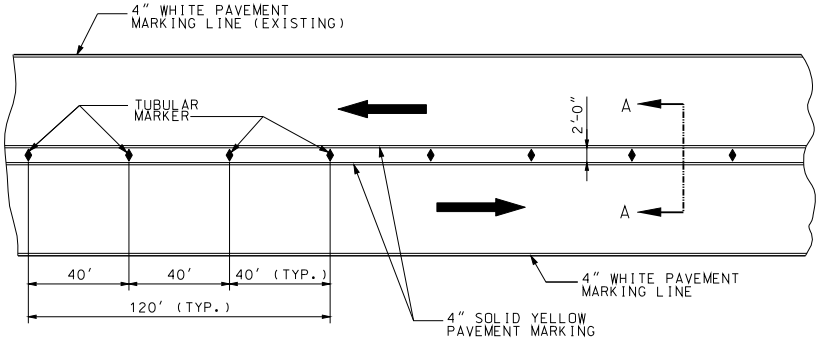

TWO LANE / TWO WAY TRAFFIC DELINEATION PLAN FOR DIVIDED HIGHWAY

IF RAISED PAVEMENT MARKERS ARE PRESENT, THE LENSES SHALL BE REMOVED OR COVERED TO THE SATISFACTION OF THE ENGINEER.

ONE TYPE III MOVABLE BARRICADE WILL BE REQUIRED TO COMPLETELY CLOSE EACH 8' OF PAVEMENT. PAVED SHOULDERS SHALL BE INCLUDED IN THE AREA TO BE CLOSED.

SIGNS SHALL BE LIGHT WEIGHT (ROLL-UP OR PLASTIC) AND OBSCURE NO MORE THAN 50 PERCENT OF THE TOP 2 RAILS OR 33 PERCENT OF ALL THREE RAILS.

TYPE C WARNING LIGHTS SHALL BE LIGHT WEIGHT (3.3 LBS. OR LESS) OR HAVE BATTERY PACK MOUNTED NO HIGHER THAN 18-INCH AND SHALL NOT COVER ANY PORTION OF THE BARRICADED FACE.

IF SIGNS OR LIGHTS CANNOT MEET THE ABOVE REQUIREMENTS, THEY SHALL BE MOUNTED ON SEPARATE CRASHWORTHY DEVICES AT HEIGHTS SPECIFIED FOR POST MOUNTED SIGNS, LOCATED IN TABLE A ON SHEET 1.

WHERE A BARRICADE ARRAY EXTENDS ACROSS A ROADWAY, THE STRIPES SHALL SLOPE DOWNWARD IN THE DIRECTION TOWARD WHICH TRAFFIC MUST TURN OR PASS.

WHERE BOTH RIGHT AND LEFT VEHICULAR MOVEMENTS ARE PROVIDED, THE STRIPES SHALL SLOPE DOWNWARD IN BOTH DIRECTIONS FROM THE CENTER OF THE BARRICADE ARRAY.

WHERE NO VEHICULAR MOVEMENTS ARE PROVIDED, THE STRIPES SHALL SLOPE DOWNWARD TOWARD THE CENTER OF THE BARRICADE ARRAY.

TYPE III MOVABLE BARRICADES SHALL BE ENTIRELY FREE STANDING AND PORTABLE. MARKING SHALL ONLY BE APPLIED TO THE FRONT OF EACH RAIL OR MAY BE APPLIED TO BOTH THE FRONT AND THE BACK OF EACH RAIL PROVIDED THE MARKING ON THE BACK DOES NOT CONFLICT WITH INTENDED OPPOSING TRAFFIC MOVEMENT. WHERE MARKING IS NOT PROVIDED ON THE BACKSIDE, STRIPS OF 3" WIDE ORANGE SHEETING MAY BE APPLIED TO THE ENDS OF EACH RAIL TO HELP DELINEATE THE DEVICE.

WHITE AND ORANGE REFLECTIVE SHEETING SHALL BE IN ACCORDANCE WITH SEC 104.2.7.3.

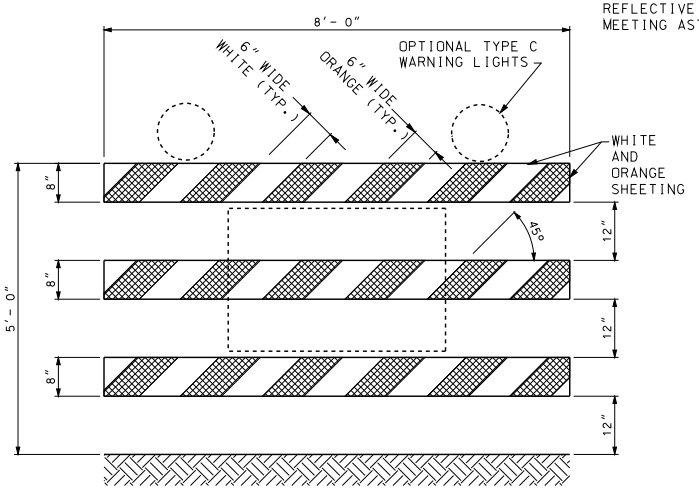

TYPE III MOVABLE BARRICADE

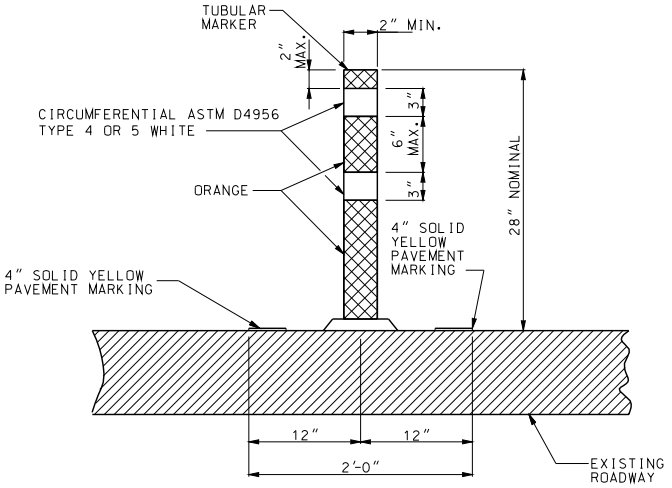

SECTION A-A

TUBULAR MARKER DETAIL

AN ADHESIVE, IN ACCORDANCE WITH THE MANUFACTURER'S RECOMMENDATIONS, SHALL BE USED TO APPLY THE TUBULAR MARKER TO THE ROADWAY SURFACE. THE ADHESIVE SHALL PERMIT EASY REMOVAL OF THE TUBULAR MARKER WITHOUT DAMAGE TO THE ROADWAY SURFACE.

REFLECTIVE SHEETING APPLIED TO TUBULAR MARKERS SHALL BE REBOUNDABLE MEETING ASTM D4956.

IF A SEAL IS PRESENT ON THIS SHEET IT HAS BEEN ELECTRONICALLY SEALED AND DATED.

MISSOURI HIGHWAYS AND TRANSPORTATION COMMISSION
105 WEST CAPITOL
JEFFERSON CITY, MO 65102
1-888-ASK-MODOT (1-888-275-6636)

STATE OF MISSOURI
KATHRYN PHILLIPS HARVEY
NUMBER PE-2007051
PROFESSIONAL ENGINEER
THIS SHEET HAS BEEN SIGNED, SEALED AND DATED ELECTRONICALLY.

TEMPORARY TRAFFIC CONTROL DEVICES

DATE EFFECTIVE: 08/01/2012
DATE PREPARED: 8/15/2012

616.10A0

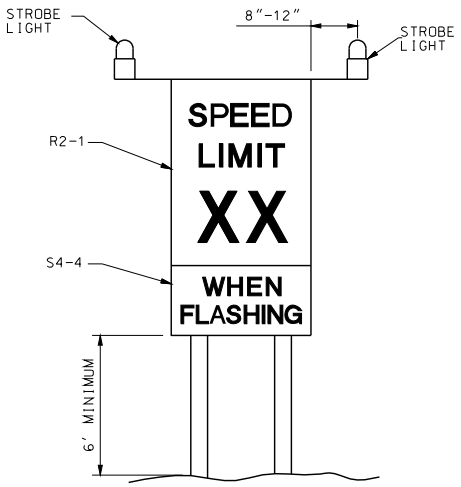

SEE NON-PORTABLE SIGN MOUNTING FOR LATERAL DIMENSIONS

SPEED LIMIT AND STROBE LIGHT ASSEMBLY

THE ASSEMBLY MAY BE EITHER POST- OR PORTABLE-MOUNTED.

THE ASSEMBLY SHALL ONLY BE USED AS SPECIFIED ON THE PLANS OR AS DIRECTED BY THE ENGINEER.

THE ASSEMBLY SHALL BE COVERED OR ROTATED SO THE SIGNS ARE NOT VISIBLE TO TRAFFIC WHEN WORK IS SUSPENDED OR THE CONDITION REQUIRING THE SPEED REDUCTION IS NOT PRESENT FOR 48 HOURS OR MORE.

THE STROBE LIGHTS SHALL BE TURNED OFF WHEN THE SPEED LIMIT IS NOT IN EFFECT.

STROBE LIGHT REQUIREMENTS

STROBE LIGHTS SHALL BE SHIELDED SO THEY WILL NOT BE DIRECTLY VISIBLE FROM THE REAR. NO DIRECT PAYMENT WILL BE MADE FOR THE BATTERIES REQUIRED TO POWER THE STROBE LIGHTS.

AT THE CONTRACTOR'S OPTION, THE STROBE LIGHTS MAY BE CONTROLLED BY A SWITCH LOCATED ON THE SIGN OR MAY BE A STANDARD TWO-CHANNEL DIGITAL TRANSMITTER AND RECEIVER UNIT. IF THE TRANSMITTER AND RECEIVER METHOD IS USED, ONE TRANSMITTER SHALL BE FURNISHED TO THE ENGINEER AT THE TIME OF INSTALLATION OF THE SPEED LIMIT ASSEMBLY. THE TRANSMITTER WILL BE RETURNED TO THE CONTRACTOR AT THE COMPLETION OF THE PROJECT. THE TRANSMITTER AND RECEIVERS WILL REMAIN THE PROPERTY OF THE CONTRACTOR AFTER THE PROJECT IS COMPLETED. NO DIRECT PAYMENT WILL BE MADE FOR THE COST OF THE TRANSMITTER AND RECEIVER.

PORTABLE WARNING LIGHTS

	TYPE A LOW INTENSITY	TYPE B HIGH INTENSITY	TYPE C STEADY BURN	SEQUENTIAL FLASHING
LENS DIRECTIONAL FACES	1 OR 2	1	1 OR 2	1
FLASHING RATE PER MINUTE	55 TO 75	55 TO 75	CONSTANT	55 TO 75
MINIMUM ON-TIME(1)	10%	8%	CONSTANT	CONSTANT
HOURS OF OPERATION	DUSK TO DAWN	24 HRS/DAY	DUSK TO DAWN	24 HRS/DAY

TYPE A, TYPE C AND SEQUENTIAL LIGHTS SHALL BE VISIBLE ON A CLEAR NIGHT FROM A DISTANCE OF 3000 FEET(2).

TYPE B LIGHTS SHALL BE VISIBLE ON A SUNNY DAY WHEN VIEWED WITHOUT THE SUN DIRECTLY ON OR BEHIND THE DEVICE FROM A DISTANCE OF 1000 FEET(2).

SEQUENTIAL FLASHING WARNING LIGHTS SHALL BE PLACED WITHIN THE MERGING TAPER AND STILL COMMUNICATE WITH ANY LIGHT WITH THE SEQUENCE. THE LIGHTS SHOULD BE CAPABLE OF BEING SPACED AT LEAST 60 FEET AND MAY HAVE AN OFFSET CAPABILITY OF AT LEAST 6 FEET.

(1) LENGTH OF TIME THAT INSTANTANEOUS INTENSITY IS EQUAL TO OR GREATER THAN EFFECTIVE INTENSITY.
(2) THIS VISIBILITY MUST BE MAINTAINED WITHIN A SOLID ANGLE 9° ON EACH SIDE OF THE VERTICAL AXIS, AND 5° ABOVE AND 5° BELOW THE HORIZONTAL AXIS.

PORTABLE WARNING LIGHTS SHALL BE BATTERY- OR SOLAR-POWERED AND CONSIST OF A SIGNLE UNIT (HEAD AND HOUSING).

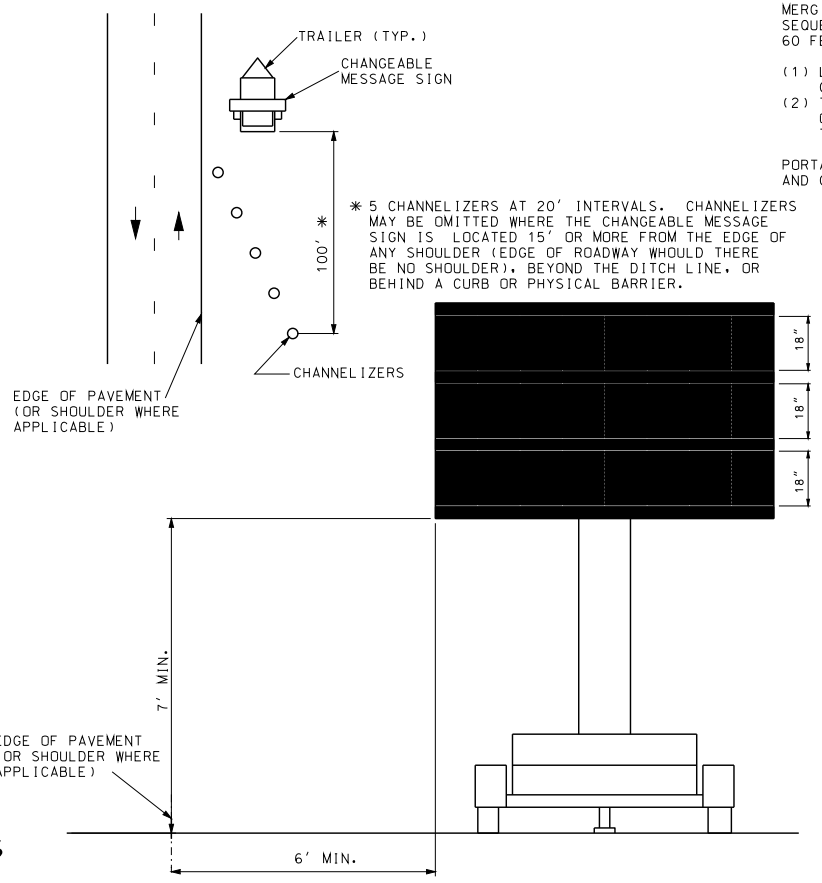

* 5 CHANNELIZERS AT 20' INTERVALS. CHANNELIZERS MAY BE OMITTED WHERE THE CHANGEABLE MESSAGE SIGN IS LOCATED 15' OR MORE FROM THE EDGE OF ANY SHOULDER (EDGE OF ROADWAY WHOULD THERE BE NO SHOULDER), BEYOND THE DITCH LINE, OR BEHIND A CURB OR PHYSICAL BARRIER.

CHANGEABLE MESSAGE SIGN

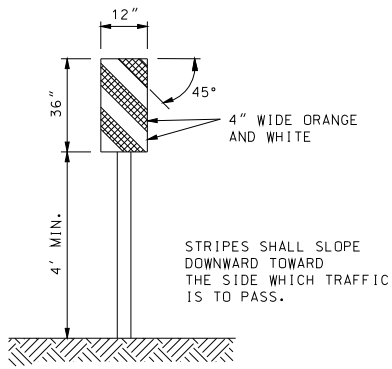

TYPE 3 OBJECT MARKERS

WHITE AND ORANGE REFLECTIVE SHEETING SHALL BE IN ACCORDANCE WITH SEC 1042.2.7.3.

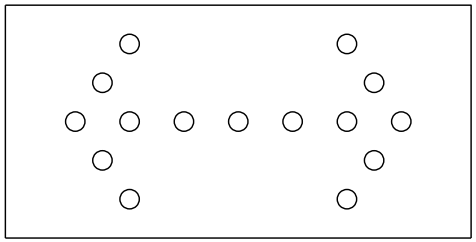

FLASHING ARROW PANEL REQUIREMENTS

PANEL MOUNTING HEIGHT SHALL BE AT LEAST 7 FEET FROM THE ROADWAY SURFACE TO THE LOWEST POINT ON THE PANEL. THE BOTTOM OF THE PANEL SHALL BE RELATIVELY LEVEL WHEN IN USE.

MISSOURI HIGHWAYS AND TRANSPORTATION COMMISSION
105 WEST CAPITOL
JEFFERSON CITY, MO 65102
1-888-ASK-MODOT (1-888-275-6636)

STATE OF MISSOURI
KATHRYN PHILLIPS HARVEY
NUMBER PE-23751
PROFESSIONAL ENGINEER
THIS SHEET HAS BEEN SIGNED, SEALED AND DATED ELECTRONICALLY.

TEMPORARY TRAFFIC CONTROL DEVICES

DATE EFFECTIVE: 08/01/2012
DATE PREPARED: 7/26/2012

616.10A0

SHEET NO. 4 OF 8

IF A SEAL IS PRESENT ON THIS SHEET IT HAS BEEN ELECTRONICALLY SEALED AND DATED.

WARNING SIGNS

SIGN	SIZE (IN.)	AREA (SQ. FT.)	COLOR SYM. LEG. BRD.	COLOR BACK GROUND	SHEETING	DESCRIPTION
SPECIAL	36X36	9.00	BK	FL. OR	R4	FRESH OIL/LOOSE GRAVEL (3)
E05-2	48X36	12.00	BK	FL. OR	R4	EXIT OPEN
E05-2a	48X36	12.00	BK	FL. OR	R4	EXIT CLOSED
W01-1L	48X48	16.00	BK	FL. OR	R4	TURN (SYMBOL LEFT ARROW)
W01-1R	48X48	16.00	BK	FL. OR	R4	TURN (SYMBOL RIGHT ARROW)
W01-2L	48X48	16.00	BK	FL. OR	R4	CURVE (SYMBOL LEFT ARROW)
W01-2R	48X48	16.00	BK	FL. OR	R4	CURVE (SYMBOL RIGHT ARROW)
W01-3L	48X48	16.00	BK	FL. OR	R4	REVERSE TURN (SYMBOL LEFT ARROW)
W01-3R	48X48	16.00	BK	FL. OR	R4	REVERSE TURN (SYMBOL RIGHT ARROW)
W01-4L	48X48	16.00	BK	FL. OR	R4	REVERSE CURVE (SYMBOL LEFT ARROW)
W01-4R	48X48	16.00	BK	FL. OR	R4	REVERSE CURVE (SYMBOL RIGHT ARROW)
W01-4bL	48X48	16.00	BK	FL. OR	R4	DOUBLE ARROW REVERSE CURVE (SYMBOL LEFT ARROWS) (2)
W01-4bR	48X48	16.00	BK	FL. OR	R4	DOUBLE ARROW REVERSE CURVE (SYMBOL RIGHT ARROWS) (2)
W01-4cL	48X48	16.00	BK	FL. OR	R4	TRIPLE ARROW REVERSE CURVE (SYMBOL LEFT ARROWS) (2)
W01-4cR	48X48	16.00	BK	FL. OR	R4	TRIPLE ARROW REVERSE CURVE (SYMBOL RIGHT ARROWS) (2)
W01-6	60X30	12.50	BK	FL. OR	R4	HORIZONTAL ARROW (SYMBOL)
W01-6a	72X36	18.00	BK	FL. OR	R4	HORIZONTAL ARROW (SYMBOL ON PERMANENT BARRICADE) (1)
W01-7	60X30	12.50	BK	FL. OR	R4	DOUBLE HEAD HORIZONTAL ARROW (SYMBOL)
W01-7a	72X36	18.00	BK	FL. OR	R4	DOUBLE HEAD HORIZONTAL ARROW (SYMBOL ON PERMANENT BARRICADE)(1)
W01-8	18X24	3.00	BK	FL. OR	R4	CHEVRON (SYMBOL)
W01-8a	30X36	7.50	BK	FL. OR	R4	CHEVRON (SYMBOL FOR DIVIDED HIGHWAYS)
W03-1	48X48	16.00	BK	FL. OR	R4	STOP AHEAD (SYMBOL)
W03-2	48X48	16.00	BK	FL. OR	R4	YIELD AHEAD (SYMBOL)
W03-3	48X48	16.00	BK	FL. OR	R4	SIGNAL AHEAD (SYMBOL)
W03-4	48X48	16.00	BK	FL. OR	R4	BE PREPARED TO STOP
W03-5	48X48	16.00	BK	FL. OR	R4	SPEED LIMIT AHEAD
W04-1L	48X48	16.00	BK	FL. OR	R4	MERGE (SYMBOL FROM LEFT)
W04-1R	48X48	16.00	BK	FL. OR	R4	MERGE (SYMBOL FROM RIGHT)
W05-1	48X48	16.00	BK	FL. OR	R4	ROAD/BRIDGE/RAMP NARROWS (4)
W05-3	48X48	16.00	BK	FL. OR	R4	ONE LANE BRIDGE
W05-5	48X48	16.00	BK	FL. OR	R4	NARROW LANES (3)
W06-1	48X48	16.00	BK	FL. OR	R4	DIVIDED HIGHWAY (SYMBOL)
W06-2	48X48	16.00	BK	FL. OR	R4	DIVIDED HIGHWAY END (SYMBOL)
W06-3	48X48	16.00	BK	FL. OR	R4	TWO WAY TRAFFIC (SYMBOL)
W07-3a	30X24	5.00	BK	FL. OR	R4	NEXT XX MILES (PLAQUE)
W08-1	48X48	16.00	BK	FL. OR	R4	BUMP
W08-2	48X48	16.00	BK	FL. OR	R4	DIP
W08-3	48X48	16.00	BK	FL. OR	R4	PAVEMENT ENDS
W08-4	48X48	16.00	BK	FL. OR	R4	SOFT SHOULDER
W08-5	48X48	16.00	BK	FL. OR	R4	SLIPPERY WHEN WET (SYMBOL)
W08-6	48X48	16.00	BK	FL. OR	R4	TRUCK CROSSING WITH FLAGS
W08-6c	48X48	16.00	BK	FL. OR	R4	TRUCK ENTRANCE (3)
W08-7	36X36	9.00	BK	FL. OR	R4	LOOSE GRAVEL
W08-9	48X48	16.00	BK	FL. OR	R4	LOW SHOULDER
W08-11	48X48	16.00	BK	FL. OR	R4	UNEVEN LANES
W08-12	48X48	16.00	BK	FL. OR	R4	NO CENTER LINE
W08-15	48X48	16.00	BK	FL. OR	R4	GROOVED PAVEMENT
W08-15p	30X24	5.00	BK	FL. OR	R4	MOTORCYCLE (PLAQUE)
W08-17	48X48	16.00	BK	FL. OR	R4	SHOULDER DROP-OFF (SYMBOL)
W08-17p	30X24	5.00	BK	FL. OR	R4	SHOULDER DROP-OFF (PLAQUE)
W10-1	42 RND.	9.62	BK	FL. YL	R4	RAILROAD CROSSING
W012-1	24X24	4.00	BK	FL. OR	R4	DOUBLE DOWN ARROW (SYMBOL)
W012-2	48X48	16.00	BK	FL. OR	R4	LOW CLEARANCE (SYMBOL)
W012-2x	24X18	3.00	BK	FL. OR	R4	LOW CLEARANCE (PLAQUE) (3)
W012-2a	84X24	14.00	BK	FL. OR	R4	OVERHEAD LOW CLEARANCE (FEET AND INCHES) (3)
SPECIAL	120X60	50.00	BK	FL. OR	R4	LOW CLEARANCE XX FT XX IN XX MILES AHEAD (3)
SPECIAL	120X60	50.00	BK	FL. OR	R4	WIDTH RESTRICTION XX FT XX IN XX MILES AHEAD (3)
W013-1	30X30	6.25	BK	FL. OR	R4	ADVISORY SPEED (PLAQUE)
W016-2	30X24	5.00	BK	FL. OR	R4	XXX FEET (PLAQUE)
W016-3	30X24	5.00	BK	FL. OR	R4	X MILE (PLAQUE)
W020-1	48X48	16.00	BK	FL. OR	R4	ROAD/BRIDGE/RAMP WORK AHEAD (4)
W020-2	48X48	16.00	BK	FL. OR	R4	DETOUR AHEAD
W020-3	48X48	16.00	BK	FL. OR	R4	ROAD CLOSED AHEAD
W020-4	48X48	16.00	BK	FL. OR	R4	ONE LANE ROAD AHEAD
W020-5	48X48	16.00	BK	FL. OR	R4	RIGHT/CENTER/LEFT LANE CLOSED AHEAD (4)

(1) SIGN DEPICTION, ARROW, BORDERS AND SPACING SHALL BE IN ACCORDANCE WITH THE LATEST EDITION OF "STANDARD HIGHWAY SIGNS" BY THE U.S. DEPARTMENT OF TRANSPORTATION - FHWA.

(2) REFER TO THE LATEST EDITION OF MUTCD PART VI BY THE U.S. DEPARTMENT OF TRANSPORTATION - FHWA FOR SIGN DEPICTION, ARROW, BORDERS AND SPACING SHALL CONFORM TO THE GUIDELINES SET FORTH IN THE LATEST EDITION OF "STANDARD HIGHWAY SIGNS" BY THE U.S. DEPARTMENT OF TRANSPORTATION - FHWA.

(3) ARROW, BORDERS AND SPACING SHALL BE IN ACCORDANCE WITH THE LATEST EDITION OF "STANDARD HIGHWAY SIGNS" BY THE U.S. DEPARTMENT OF TRANSPORTATION - FHWA.

(4) USE OF A SUPPLEMENTAL PLATE FOR LINE 1 IS ACCEPTABLE.

(5) PLAQUE AND APPLICABLE REGULATORY SIGN MAY BE MANUFACTURED AS ONE SIGN.

(6) R4 REFER TO SEC 1042.2.7.3.

GENERAL NOTES:

SIGN LAYOUTS SHALL BE IN ACCORDANCE WITH THE LATEST EDITION OF "STANDARD HIGHWAY SIGNS" BY THE U.S. DEPARTMENT OF TRANSPORTATION - FHWA, UNLESS SPECIFIED OTHERWISE.

SIGN DIMENSIONS SHOWN ARE MINIMUM. NO ADDITIONAL PAYMENT WILL BE MADE IF CONTRACTORS USE LARGER SIGNS.

NO ADDITIONAL PAYMENT WILL BE MADE FOR PLATES.

ALL PLAQUES SHALL HAVE A BORDER. PLATES SHALL NOT HAVE A BORDER.

MISSOURI HIGHWAYS AND TRANSPORTATION COMMISSION
105 WEST CAPITOL
JEFFERSON CITY, MO 65102
1-888-ASK-MODOT (1-888-275-6636)

STATE OF MISSOURI
KATHRYN PHILLIPS HARVEY
NUMBER PE-2375I
PROFESSIONAL ENGINEER
THIS SHEET WAS SIGNED, SEALED AND DATED ELECTRONICALLY.

TEMPORARY TRAFFIC CONTROL DEVICES

WARNING SIGNS

DATE EFFECTIVE: 08/01/2012
DATE PREPARED: 8/15/2012

616.10A0

IF A SEAL IS PRESENT ON THIS SHEET IT HAS BEEN ELECTRONICALLY SEALED AND DATED.

SIGN	SIZE (IN.)	AREA (SQ. FT.)	COLOR SYM. LEG. BRD.	COLOR BACK GROUND	SHEETING	DESCRIPTION	
WARNING SIGNS							
W020-5a	48X48	16.00	BK	FL. OR	R4	2 RIGHT/CENTER/LEFT LANES CLOSED AHEAD	(4)
SPECIAL W020-6a	48X48	16.00	BK	FL. OR	R4	RIGHT/CENTER/LEFT LANE CLOSED	(3)(4)
W020-7	48X48	16.00	BK	FL. OR	R4	FLAGGER (SYMBOL) WITH FLAGS	
W021-2	36X36	9.00	BK	FL. OR	R4	FRESH OIL	
SPECIAL W021-5b	48X48	16.00	BK	FL. OR	R4	SHOULDER WORK AHEAD	(3)
W022-1	48X48	16.00	BK	FL. OR	R4	BLASTING ZONE AHEAD	
W022-2	42X36	10.50	BK	FL. OR	R4	TURN OFF 2-WAY RADIO AND PHONE	
W022-3	42X36	10.50	BK	FL. OR	R4	END BLASTING ZONE	
SPECIAL W022-6e	21X15	2.19	BK	FL. OR	R4	WET PAINT (ARROW PIVOTS)	(3)
GUIDE SIGNS							
E05-1	36X48	12.00	BK	FL. OR	R4	GORE EXIT	(3)
G020-1	60X24	10.00	BK	FL. OR	R4	ROAD WORK NEXT XX MILES	
G020-2	48X24	8.00	BK	FL. OR	R4	END ROAD WORK	
G020-4	36X18	4.50	BK	FL. OR	R4	PILOT CAR FOLLOW ME	
SPECIAL	42X30	8.75	BK	FL. OR	R4	PLEASE WAIT FOR PILOT CAR	(3)
G020-5aP	36X24	6.00	BK	FL. OR	R4	WORK ZONE (PLAQUE)	(3) (5)
M04-8a	24X18	3.00	BK	FL. OR	R4	END DETOUR	
M04-9L	48X36	12.00	BK	FL. OR	R4	DETOUR (LEFT ARROW)	
M04-9R	48X36	12.00	BK	FL. OR	R4	DETOUR (RIGHT ARROW)	
M04-10L	48X18	6.00	BK	FL. OR	R4	DETOUR (ARROW LEFT)	
M04-10R	48X18	6.00	BK	FL. OR	R4	DETOUR (ARROW RIGHT)	
REGULATORY SIGNS							
R1-1	48X48	13.25	WH	RD	R2	STOP	
R1-2	48 TRI.	6.93	RD	WH	R2	YIELD	
R1-2a	36X36	9.00	BK	WH	R2	TO ONCOMING TRAFFIC (PLAQUE)	
R1-3	20X9	1.25	WH	RD	R2	X-WAY (PLAQUE)	
R2-1	36X48	12.00	BK	WH	R2	SPEED LIMIT XX	
R3-1	48X48	16.00	BK/RD	WH	R2	NO RIGHT TURN (SYMBOL)	
R3-2	48X48	16.00	BK/RD	WH	R2	NO LEFT TURN (SYMBOL)	
R3-3	36X36	9.00	BK	WH	R2	NO TURNS	
R3-4	48X48	16.00	BK/RD	WH	R2	NO U-TURN (SYMBOL)	
R3-7L	30X30	6.25	BK	WH	R2	LEFT LANE MUST TURN LEFT	
R3-7R	30X30	6.25	BK	WH	R2	RIGHT LANE MUST TURN RIGHT	
R4-1	36X48	12.00	BK	WH	R2	DO NOT PASS	
R4-2	36X48	12.00	BK	WH	R2	PASS WITH CARE	
R4-7a	36X48	12.00	BK	WH	R2	KEEP RIGHT (HORIZONTAL ARROW)	
R4-8a	36X48	12.00	BK	WH	R2	KEEP LEFT (HORIZONTAL ARROW)	
R5-1	30X30	6.25	RD	WH	R2	DO NOT ENTER	
R5-1a	36X24	6.00	WH	RD	R2	WRONG WAY	
R6-1L	48X18	6.00	BK	WH	R2	ONE WAY ARROW (LEFT)	
R6-1R	48X18	6.00	BK	WH	R2	ONE WAY ARROW (RIGHT)	
R6-2L	24X30	5.00	BK	WH	R2	ONE WAY (LEFT)	
R6-2R	24X30	5.00	BK	WH	R2	ONE WAY (RIGHT)	
R10-6	24X36	6.00	BK	WH	R2	STOP HERE ON RED (45° ARROW)	
R11-2	48X30	10.00	BK	WH	R2	ROAD CLOSED	
R11-3a	60X30	12.50	BK	WH	R2	ROAD CLOSED XX MILES AHEAD LOCAL TRAFFIC ONLY	
R11-4	60X30	12.50	BK	WH	R2	ROAD CLOSED TO THRU TRAFFIC	
CONST-3A	60X48	20.00	BK	WH/FL. OR	R2	FINE SIGN	(3)
CONST-3X	56X12	4.67	BK	WH	R2	SPEEDING/PASSING (PLATE)	(3)
SPECIAL SIGNS							
CONST-7-72	72X36	18.00	WH/BL	BK/FL.OR	R2	RATE OUR WORK ZONE	
CONST-7-48	48X24	8.00	WH/BL	BK/FL.OR	R2	RATE OUR WORK ZONE	

(1) SIGN DEPICTION, ARROW, BORDERS AND SPACING SHALL BE IN ACCORDANCE WITH THE LATEST EDITION OF "STANDARD HIGHWAY SIGNS" BY THE U.S. DEPARTMENT OF TRANSPORTATION - FHWA.

(2) REFER TO THE LATEST EDITION OF MUTCD PART VI BY THE U.S. DEPARTMENT OF TRANSPORTATION - FHWA FOR SIGN DEPICTION, ARROW, BORDERS AND SPACING SHALL CONFORM TO THE GUIDELINES SET FORTH IN THE LATEST EDITION OF "STANDARD HIGHWAY SIGNS" BY THE U.S. DEPARTMENT OF TRANSPORTATION - FHWA.

(3) ARROW, BORDERS AND SPACING SHALL BE IN ACCORDANCE WITH THE LATEST EDITION OF "STANDARD HIGHWAY SIGNS" BY THE U.S. DEPARTMENT OF TRANSPORTATION - FHWA.

(4) USE OF A SUPPLEMENTAL PLATE FOR LINE 1 IS ACCEPTABLE.

(5) PLAQUE AND APPLICABLE REGULATORY SIGN MAY BE MANUFACTURED AS ONE SIGN.

(6) R2 REFER TO SEC 1042.2.7.2.

(7) R4 REFER TO SEC 1042.2.7.3.

GENERAL NOTES:

SIGN LAYOUTS SHALL BE IN ACCORDANCE WITH THE LATEST EDITION OF "STANDARD HIGHWAY SIGNS" BY THE U.S. DEPARTMENT OF TRANSPORTATION - FHWA, UNLESS SPECIFIED OTHERWISE.

SIGN DIMENSIONS SHOWN ARE MINIMUM. NO ADDITIONAL PAYMENT WILL BE MADE IF CONTRACTORS USE LARGER SIGNS.

NO ADDITIONAL PAYMENT WILL BE MADE FOR PLATES.

ALL PLAQUES SHALL HAVE A BORDER. PLATES SHALL NOT HAVE A BORDER.

MISSOURI HIGHWAYS AND TRANSPORTATION COMMISSION
105 WEST CAPITOL
JEFFERSON CITY, MO 65102
1-888-ASK-MODOT (1-888-275-6636)

STATE OF MISSOURI
KATHRYN PHILLIPS HARVEY
NUMBER PE-2007051
PROFESSIONAL ENGINEER
THIS SHEET HAS BEEN SIGNED, SEALED AND DATED ELECTRONICALLY.

TEMPORARY TRAFFIC CONTROL DEVICES

WARNING, GUIDE AND REGULATORY SIGNS

DATE EFFECTIVE: 08/01/2012
DATE PREPARED: 8/15/2012

616.10A0

SHEET NO. 6 OF 8

IF A SEAL IS PRESENT ON THIS SHEET IT HAS BEEN ELECTRONICALLY SEALED AND DATED.

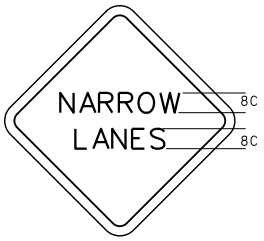

W05-5 (3)

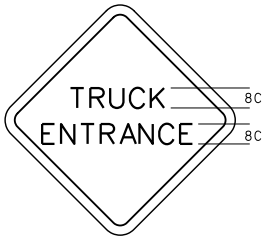

W08-6c (3)

W012-2x (3)

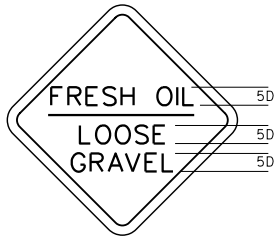

SPECIAL (3)

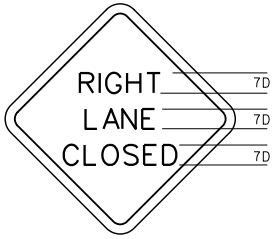

W020-6a (3)(4)

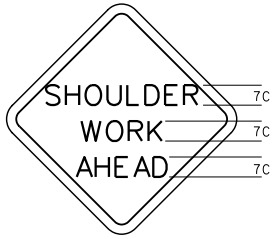

W021-5b (3)

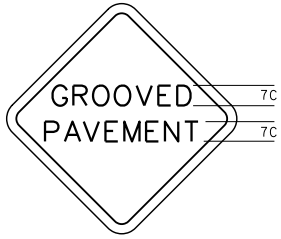

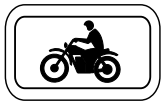

W08-15(3)
W08-15p

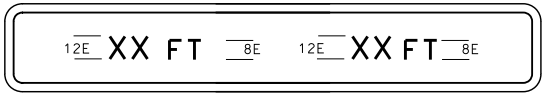

W012-2a (3)

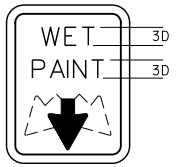

W022-6e (3)

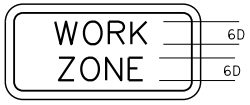

G020-5aP (3)

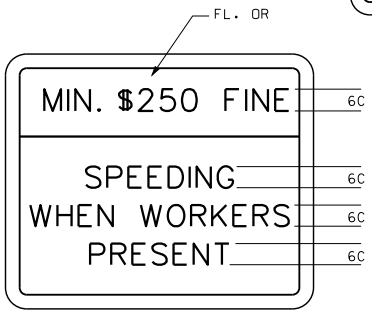

CONST-3A (3)

SPECIAL (3)

SPECIAL (3)

CONST-3X (3)

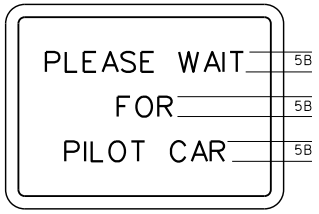

SPECIAL (3)

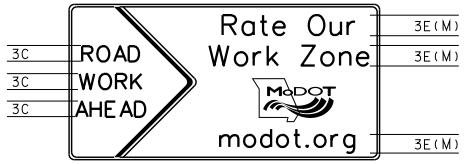

CONST-7-48

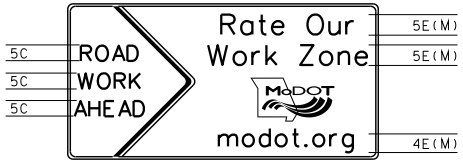

CONST-7-72

(1) SIGN DEPICTION, ARROW, BORDERS AND SPACING SHALL BE IN ACCORDANCE WITH THE LATEST EDITION OF "STANDARD HIGHWAY SIGNS" BY THE U.S. DEPARTMENT OF TRANSPORTATION - FHWA.

(2) REFER TO THE LATEST EDITION OF MUTCD PART VI BY THE U.S. DEPARTMENT OF TRANSPORTATION - FHWA FOR SIGN DEPICTION. ARROW, BORDERS AND SPACING SHALL CONFORM TO THE GUIDELINES SET FORTH IN THE LATEST EDITION OF "STANDARD HIGHWAY SIGNS" BY THE U.S. DEPARTMENT OF TRANSPORTATION - FHWA.

(3) ARROW, BORDERS AND SPACING SHALL BE IN ACCORDANCE WITH THE LATEST EDITION OF "STANDARD HIGHWAY SIGNS" BY THE U.S. DEPARTMENT OF TRANSPORTATION - FHWA.

(4) USE OF A SUPPLEMENTAL PLATE FOR LINE 1 IS ACCEPTABLE.

(5) PLAQUE AND APPLICABLE REGULATORY SIGN MAY BE MANUFACTURED AS ONE SIGN.

GENERAL NOTES:

SIGN LAYOUTS SHALL BE IN ACCORDANCE WITH THE LATEST EDITION OF "STANDARD HIGHWAY SIGNS" BY THE U.S. DEPARTMENT OF TRANSPORTATION - FHWA UNLESS SPECIFIED OTHERWISE.

SIGN DIMENSIONS SHOWN ARE MINIMUM. NO ADDITIONAL PAYMENT WILL BE MADE IF CONTRACTORS USE LARGER SIGNS.

NO ADDITIONAL PAYMENT WILL BE MADE FOR PLATES.

ALL PLAQUES SHALL HAVE A BORDER. PLATES SHALL NOT HAVE A BORDER.

LETTER DIMENSIONS SHALL BE AS SHOWN.

MISSOURI HIGHWAYS AND TRANSPORTATION COMMISSION
105 WEST CAPITOL
JEFFERSON CITY, MO 65102
1-888-ASK-MODOT (1-888-275-6636)

STATE OF MISSOURI
KATHRYN PHILLIPS HARVEY
NUMBER PE-23751
PROFESSIONAL ENGINEER
THIS SHEET HAS BEEN SIGNED, SEALED AND DATED ELECTRONICALLY.

TEMPORARY TRAFFIC CONTROL DEVICES

DATE EFFECTIVE: 08/01/2012
DATE PREPARED: 8/28/2012

616.10A0

SHEET NO. 7 OF 8

IF A SEAL IS PRESENT ON THIS SHEET IT HAS BEEN ELECTRONICALLY SEALED AND DATED.

LEGEND

- ○ – BOATS KEEP OUT (SIGN)
- ● – BOATS KEEP OUT (BUOY)
- ▲ – NO WAKE (BUOY)

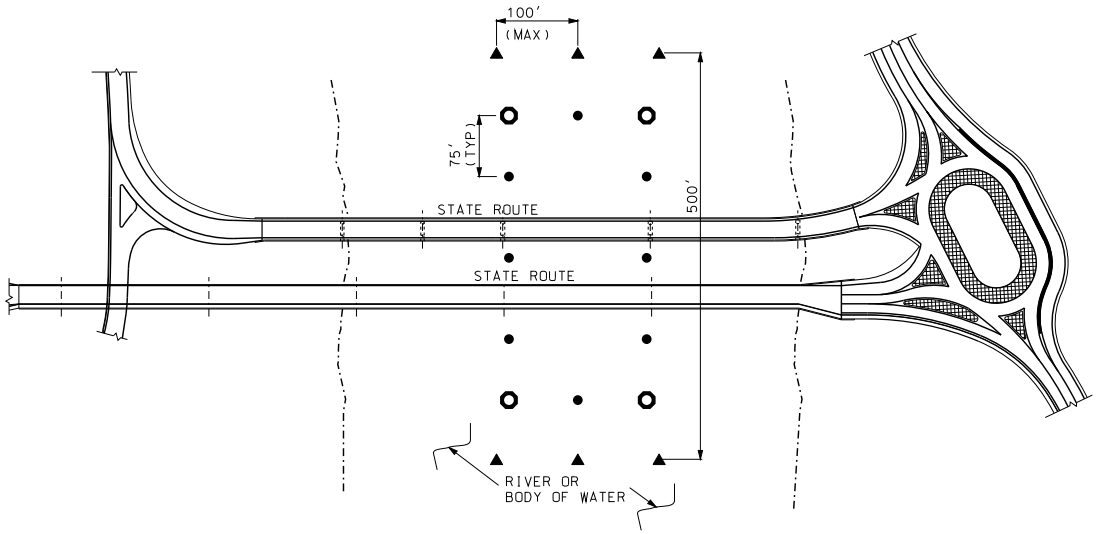

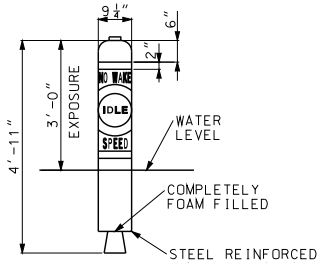

51 POUND ANCHOR
TACKLE PERMITTED

RESTRICTED AREA BUOY
("NO WAKE")
(6 REQUIRED – ROADWAY ITEM)

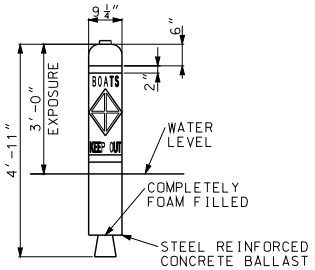

51 POUND ANCHOR
TACKLE PERMITTED

CONTROLLED AREA BUOY
("BOATS KEEP OUT")
(8 REQUIRED – ROADWAY ITEM)

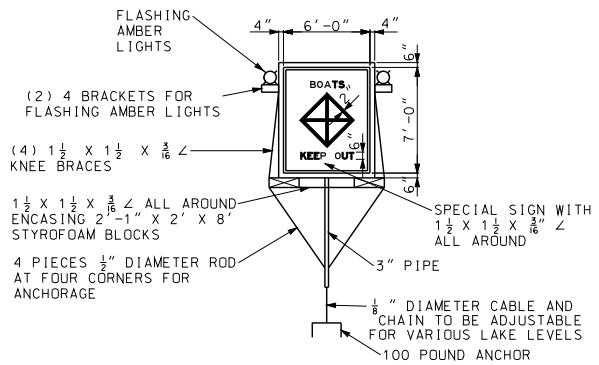

SPECIAL SIGN ASSEMBLY
("BOATS KEEP OUT")
(4 REQUIRED – ROADWAY ITEM)

GENERAL NOTES:

INFORMATION SHOWN IS SCHEMATIC ONLY. FINAL LOCATION AND NUMBER OF SIGNS AND BUOYS IS SUBJECT TO APPROVAL OF MISSOURI STATE WATER PATROL

THE DETAILS SHOWN ARE FOR BIDDING PURPOSES ONLY. ALL MATERIALS AND LABOR NECESSARY TO INSTALL AND REMOVE

SIGNS SHALL BE INCIDENTAL TO OTHER ITEMS

THE CONTRACTOR IS RESPONSIBLE FOR BUOY MAINTENANCE THROUGHOUT CONSTRUCTION AND FOR DETERMINING ANTICIPATED WATER LEVELS DURING CONSTRUCTION. EACH SIGN AND BUOY SHALL BE ANCHORED TO BOTTOM OF LAKE.

SIGNS SHALL BE DOUBLE FACED

EACH SIGN SHALL BE EQUIPPED WITH TWO (2) FLASHING LIGHT UNITS WITH AMBER LENS. FLASHING LIGHT UNITS SHALL BE FURNISHED AND MAINTAINED BY THE CONTRACTOR

ALL LETTERING TO BE BLACK IN COLOR IN BLOCK FORM.

FOR OTHER INFORMATION AND LOCATION OF SIGNS AND BUOYS SEE SPECIAL PROVISIONS.

SCHEMATIC SHOWN IS FOR ONE NAVIGATIONAL SPAN. FOR WORK ON OTHER SPANS MOVE APPROPRIATE SIGNS WITH NO DIRECT PAY

COLOR:
BACKGROUND – WHITE
LEGEND – BLACK
2" REFLECTIVE BAND AND SYMBOL – INTERNATIONAL ORANGE

MISSOURI HIGHWAYS AND TRANSPORTATION COMMISSION
105 WEST CAPITOL
JEFFERSON CITY, MO 65102
1-888-ASK-MODOT (1-888-275-6636)

STATE OF MISSOURI
KATHRYN PHILLIPS HARVEY
NUMBER PE-23751
PROFESSIONAL ENGINEER
THIS SHEET HAS BEEN SIGNED, SEALED AND DATED ELECTRONICALLY.

TEMPORARY TRAFFIC CONTROL DEVICES

TRAFFIC CONTROL FOR WATERWAYS

DATE EFFECTIVE:	08/01/2012	616.10A0	SHEET NO.
DATE PREPARED:	8/15/2012		8 OF 8

IF A SEAL IS PRESENT ON THIS SHEET IT HAS BEEN ELECTRONICALLY SEALED AND DATED.

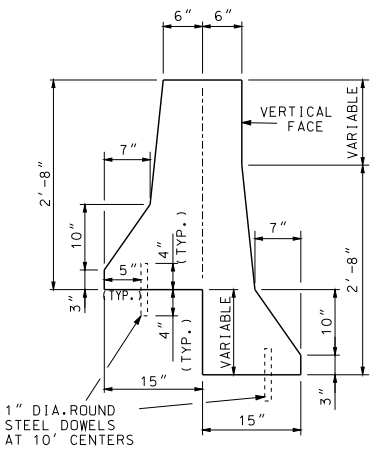

TYPICAL VIEW
BARRIER FOR
STEPPED PAVEMENT

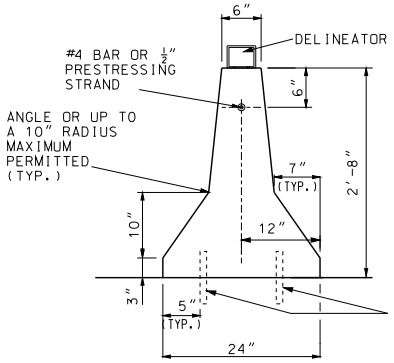

TYPICAL VIEW
TYPE A - TWO TRAFFIC FACES

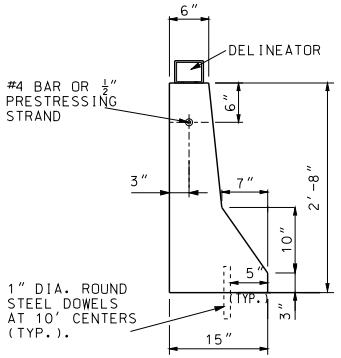

TYPICAL VIEW
TYPE B - ONE TRAFFIC FACE

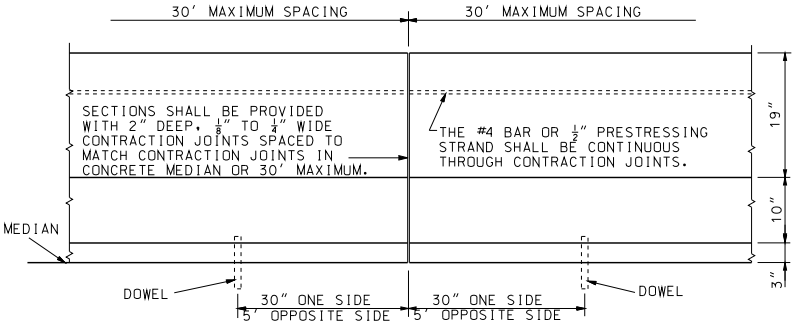

ELEVATION

(1) 3" X 4" RETROREFLECTIVE YELLOW, WHITE OR RED SHEETING ON EITHER OR BOTH FACES OF DELINEATOR, AS REQUIRED, IN ACCORDANCE WITH ASTM D 4956 TYPE 5 OR 8 ✳

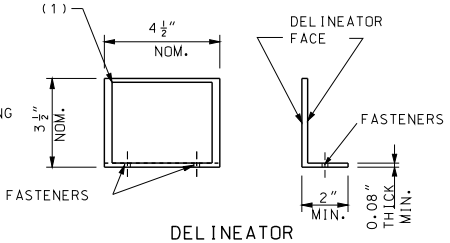

DELINEATOR

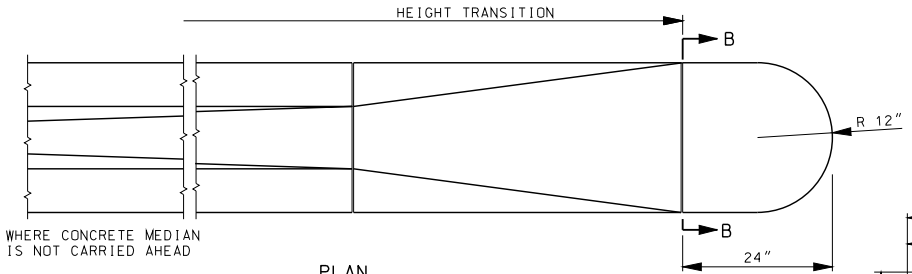

PLAN

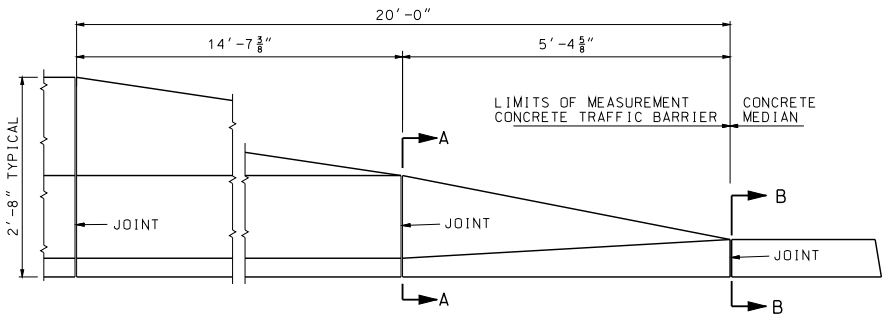

ELEVATION
BARRIER HEIGHT TRANSITION

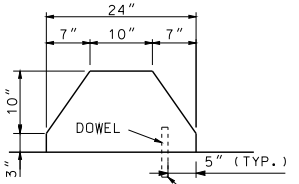

SECTION A-A

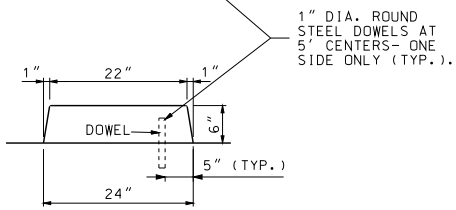

SECTION B-B

GENERAL NOTES:

HEIGHT TRANSITIONS SHALL NOT BE USED IN LOCATIONS WHERE THE POSTED SPEED IS GREATER THAN 35 MPH.

ALL TOP AND END EDGES SHALL BE CHAMFERED ¾ INCH.

EXPANSION JOINTS SHALL BE PROVIDED IN THE BARRIER TO MATCH EXPANSION JOINTS IN PAVEMENT.

✳ REFLECTIVE SHEETING SHALL FOLLOW GUIDELINES OUTLINED IN SEC 1042.2.7 FOR CORRECT APPLICATION OF SHEETING TO DELINEATOR BODY. THE COLOR OF THE SHEETING SHALL MATCH THE CLOSEST ADJACENT PAVEMENT MARKING. RED SHEETING SHALL BE APPLIED TO THE BACK SIDE OF THE DELINEATOR WHEN THE DELINEATION IS PLACED ALONG AN INTERCHANGE RAMP AND COULD BE VIEWED BY WRONG WAY TRAFFIC.

MISSOURI HIGHWAYS AND TRANSPORTATION COMMISSION
105 WEST CAPITOL
JEFFERSON CITY, MO 65102
1-888-ASK-MODOT (1-888-275-6636)

STATE OF MISSOURI
KATHRYN PHILLIPS HARVEY
NUMBER PE-23751
PROFESSIONAL ENGINEER
THIS SHEET HAS BEEN SIGNED, SEALED AND DATED ELECTRONICALLY.

PERMANENT CONCRETE TRAFFIC BARRIER

TYPE A AND B

DATE EFFECTIVE: 08/01/2012	617.10H	SHEET NO. 1 OF 12
DATE PREPARED: 11/26/2012		

IF A SEAL IS PRESENT ON THIS SHEET IT HAS BEEN ELECTRONICALLY SEALED AND DATED.

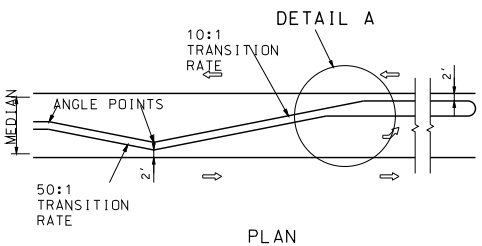

PLAN

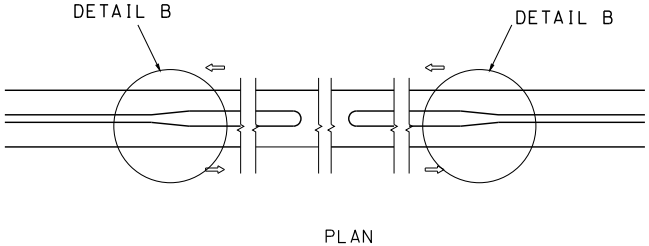

PLAN

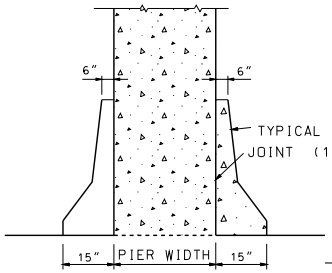

SECTION C-C

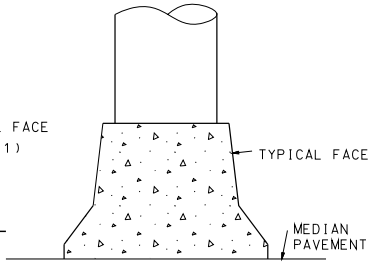

SECTION B-B

SEE SECTION C-C FOR DIMENSIONS

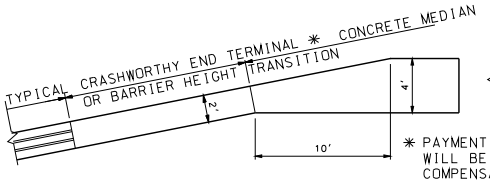

DETAIL A

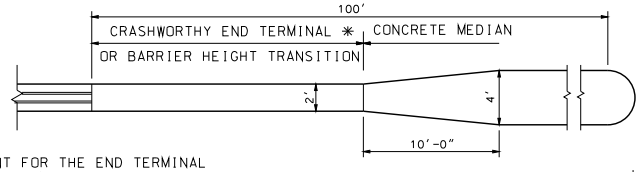

DETAIL B

* PAYMENT FOR THE END TERMINAL WILL BE CONSIDERED FULL COMPENSATION FOR END TERMINAL, BACKUP ASSEMBLIES, AND OTHER ITEMS NECESSARY FOR PROPER INSTALLATION AS REQUIRED BY THE MANUFACTURER.

LEFT TURN LANE TRANSITION

MEDIAN OPENING TRANSITION

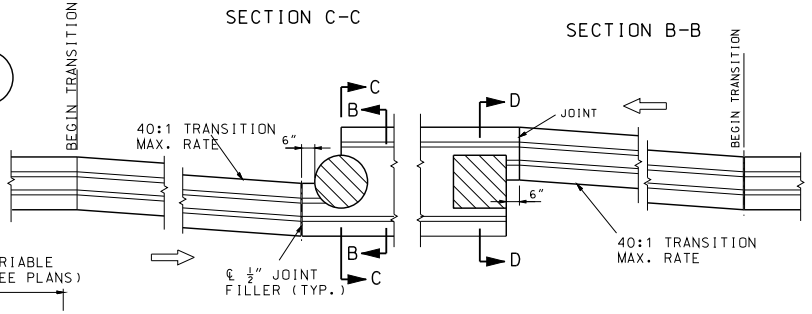

PLAN

TRANSITION DETAILS FOR PIER PROTECTION

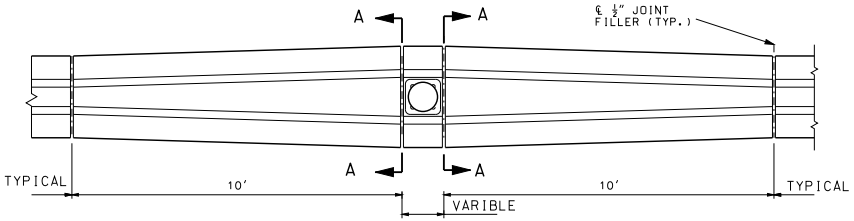

PLAN

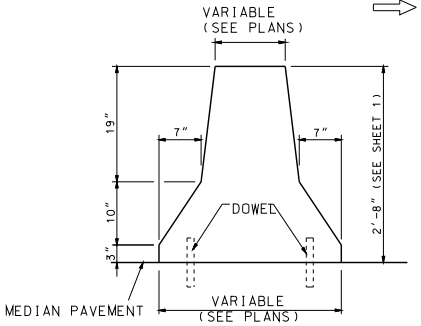

SECTION A-A

(1) 1 IN. JOINT WITH JOINT FILLER AND SEALER

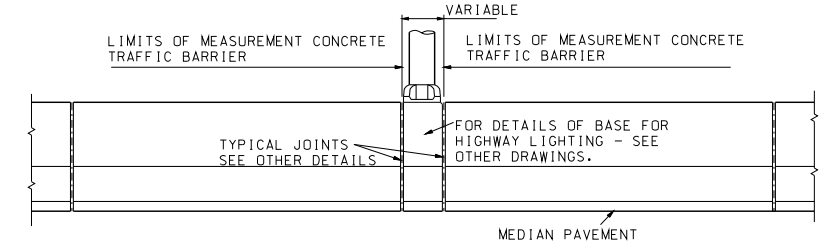

ELEVATION

TRANSITION DETAILS FOR MEDIAN LIGHTING

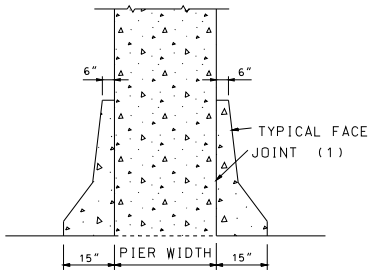

SECTION D-D

GENERAL NOTES:

FOR DETAILS AND LOCATION OF DOWELS, SEE SHEET 1.

MISSOURI HIGHWAYS AND TRANSPORTATION COMMISSION
105 WEST CAPITOL
JEFFERSON CITY, MO 65102
1-888-ASK-MODOT (1-888-275-6636)

STATE OF MISSOURI
KATHRYN PHILLIPS HARVEY
NUMBER PE-2375T
PROFESSIONAL ENGINEER
THIS SHEET HAS BEEN SIGNED, SEALED AND DATED ELECTRONICALLY.

PERMANENT CONCRETE TRAFFIC BARRIER

TYPE A AND B

DATE EFFECTIVE: 08/01/2012	617.10H	SHEET NO.
DATE PREPARED: 7/19/2012		2 OF 12

IF A SEAL IS PRESENT ON THIS SHEET IT HAS BEEN ELECTRONICALLY SEALED AND DATED.

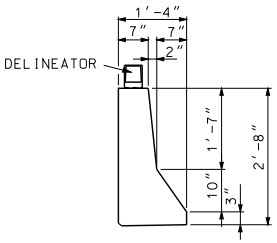

TYPE B (MODIFIED)
TYPICAL SECTION

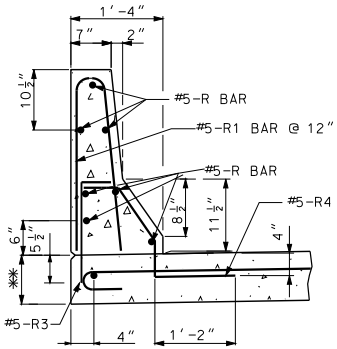

PART SECTION THROUGH
UPPER BARRIER

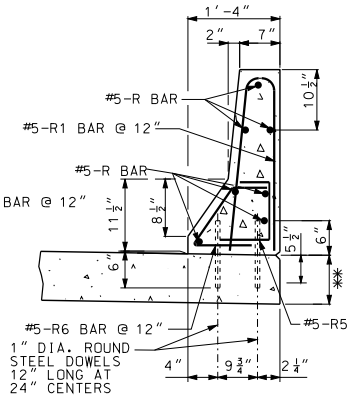

PART SECTION THROUGH
LOWER BARRIER

TABLE A TRANSVERSE PAVEMENT REINFORCEMENT	
PAVEMENT THICKNESS ✻✻	BAR SIZE & SPACING
8"	#5 @ 5"
9"	#5 @ 6"
10"	#5 @ 8"
11"	#5 @ 9"
≥ 12"	#6 @ 12"

NOTES:

ALL REINFORCING STEEL SHALL BE EPOXY COATED.

NO DIRECT PAYMENT WILL BE MADE FOR REINFORCING STEEL.

MINIMUM CLEARANCE TO REINFORCING STEEL SHALL BE 1½", UNLESS OTHERWISE SHOWN.

✻✻ SEE ROADWAY PAVEMENT DESIGN.

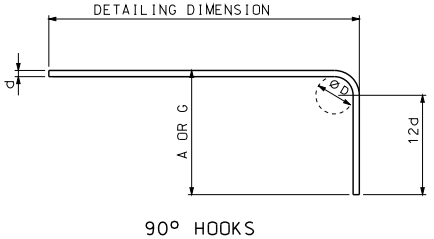

90° HOOKS

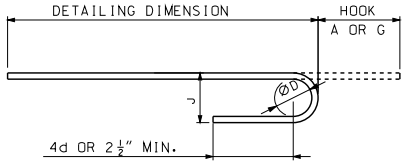

180° HOOKS

END HOOK DIMENSIONS				
BAR SIZE	D (IN.)	ALL GRADES		
		180° HOOKS		90° HOOKS
		A OR G	J	A OR G
#5	3¾"	7"	5"	10"
#6	4½"	8"	6"	12"

ALL STANDARD HOOKS AND BENDS OTHER THAN 180° TO BE BENT WITH THE SAME PROCEDURE AS FOR 90° STANDARD HOOKS.

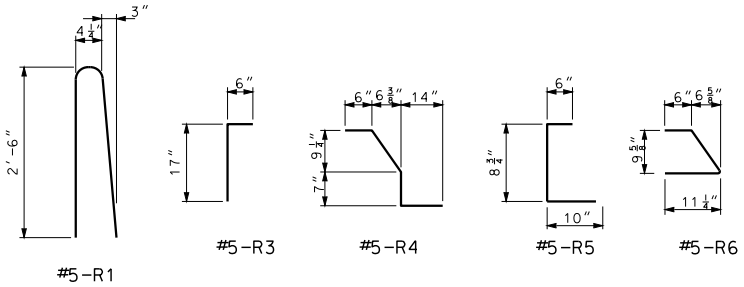

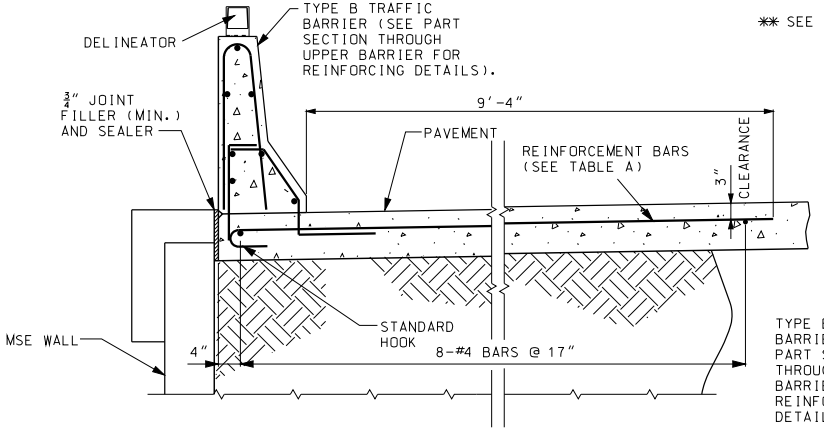

TYPE B TRAFFIC BARRIER ON TOP OF MSE WALL

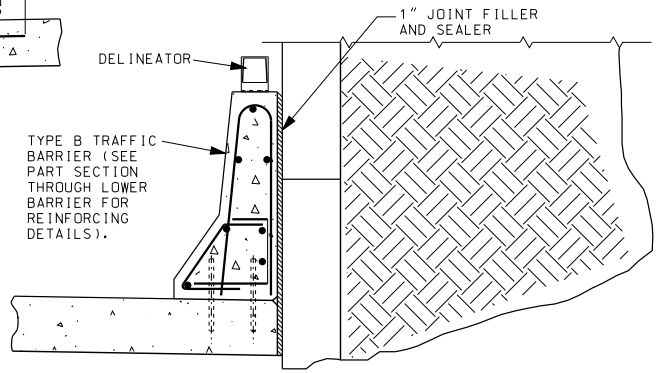

TYPE B TRAFFIC BARRIER AT THE SIDE OF MSE WALL

NOTES:

TYPE B (MODIFIED) SHALL BE USED ONLY AT LOCATIONS SHOWN IN PLANS.

FOR DELINEATOR DETAILS, SEE SHEET 1.

MISSOURI HIGHWAYS AND TRANSPORTATION COMMISSION
105 WEST CAPITOL
JEFFERSON CITY, MO 65102
1-888-ASK-MODOT (1-888-275-6636)

STATE OF MISSOURI
KATHRYN PHILLIPS HARVEY
NUMBER PE-23751
PROFESSIONAL ENGINEER
THIS SHEET HAS BEEN SIGNED, SEALED AND DATED ELECTRONICALLY.

PERMANENT CONCRETE TRAFFIC BARRIER
AT MSE WALL
TYPE B MODIFIED

DATE EFFECTIVE: 08/01/2012
DATE PREPARED: 7/19/2012

617.10H

SHEET NO. 3 OF 12

IF A SEAL IS PRESENT ON THIS SHEET IT HAS BEEN ELECTRONICALLY SEALED AND DATED.

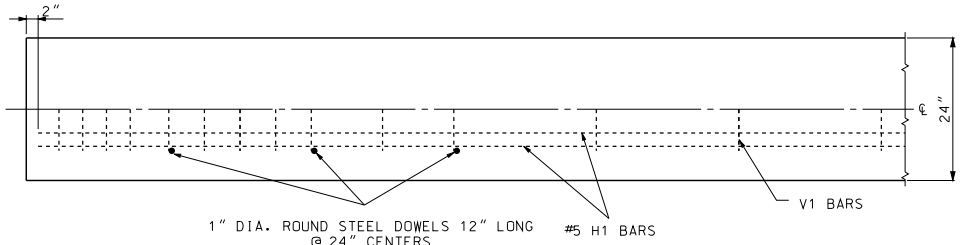

PLAN VIEW
(SYMMETRICAL ABOUT CENTERLINE)

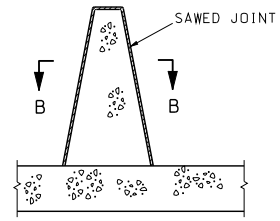

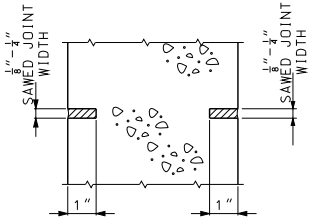

SECTION B-B

SECTION THROUGH SAWED JOINT

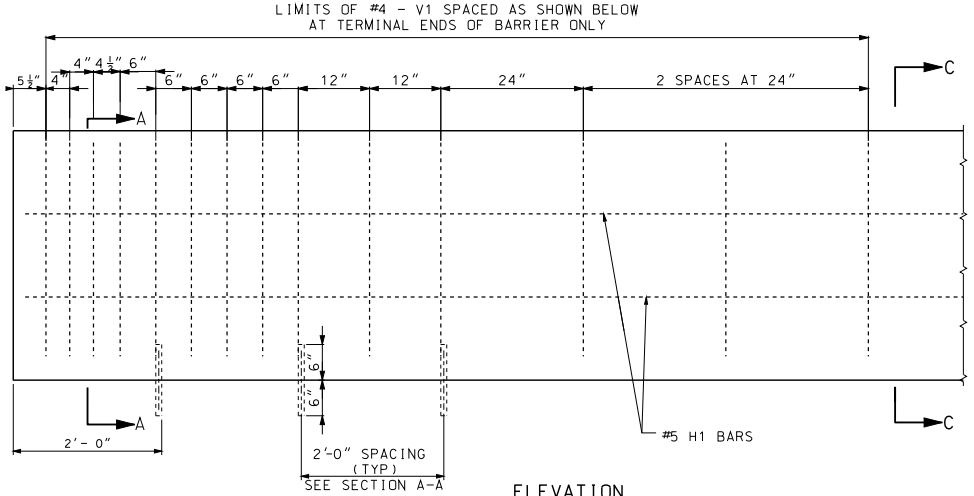

ELEVATION

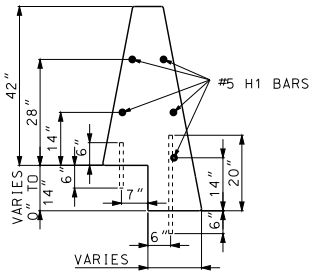

SECTION C-C
(STEPPED PAVEMENT)

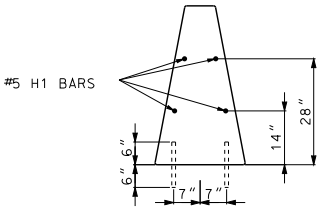

SECTION C-C
(NORMAL PAVEMENT)

NOTES:

BAR SPLICES SHALL BE A MINIMUM OF 24 TIMES THE NOMINAL DIAMETER OF THE BAR.

ANY REINFORCING BAR INSTALLATION METHOD DEVISED BY THE CONTRACTOR AND APPROVED BY THE ENGINEER THAT WILL ASSURE THE LONGITUDINAL REINFORCING STEEL WILL BE POSITIONED ±1/2 INCH AS DIMENSIONED WILL BE SATISFACTORY.

THE CONTRACTOR HAS THE OPTION TO SLIP-FORM THE BARRIER. IN WHICH CASE, ADDITIONAL REINFORCEMENT MAY BE TIED TO THE UPPER TWO-THIRDS OF THE REINFORCING CAGE TO PROVIDE BRACING.

ANCHORING DOWELS MAY BE OMITTED WHEN THE PLANS SPECIFY A MINIMUM 1 3/4" PAVEMENT SURFACE TO BE PLACED ABUTTING BOTH BARRIER FACES.

SAWED JOINTS SHALL BE LOCATED AT PAVEMENT TRANSVERSE JOINTS.

FOR DELINEATOR DETAILS, SEE SHEET 1.

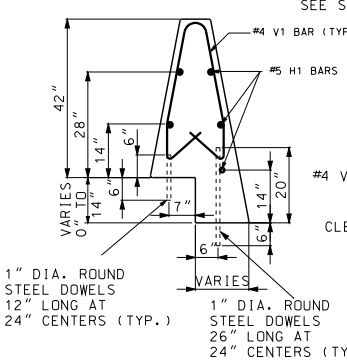

SECTION A-A
(STEPPED PAVEMENT)

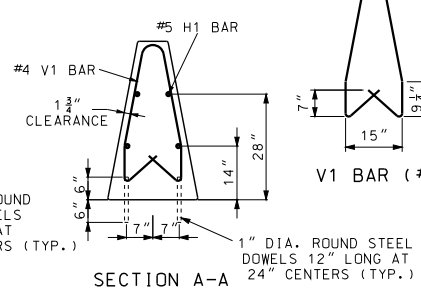

SECTION A-A
(NORMAL PAVEMENT)

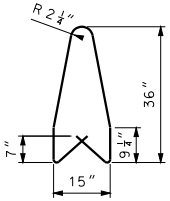

V1 BAR (#4)

REINFORCING DETAILS

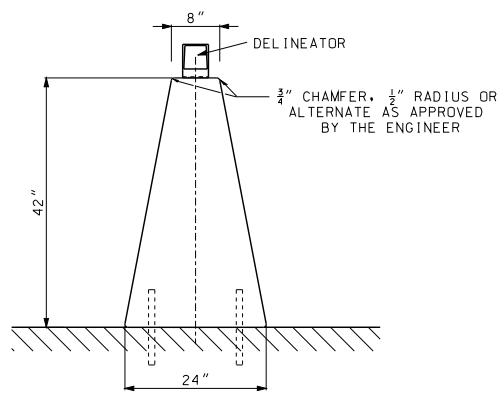

TYPE C
TYPICAL SECTION

MISSOURI HIGHWAYS AND TRANSPORTATION COMMISSION
105 WEST CAPITOL
JEFFERSON CITY, MO 65102
1-888-ASK-MODOT (1-888-275-6636)

STATE OF MISSOURI
KATHRYN PHILLIPS HARVEY
NUMBER PE-23751
PROFESSIONAL ENGINEER
THIS SHEET HAS BEEN SIGNED, SEALED AND DATED ELECTRONICALLY.

PERMANENT CONCRETE TRAFFIC BARRIER

TYPE C

DATE EFFECTIVE: 08/01/2012 DATE PREPARED: 8/7/2012	617.10H	SHEET NO. 4 OF 12

IF A SEAL IS PRESENT ON THIS SHEET IT HAS BEEN ELECTRONICALLY SEALED AND DATED.

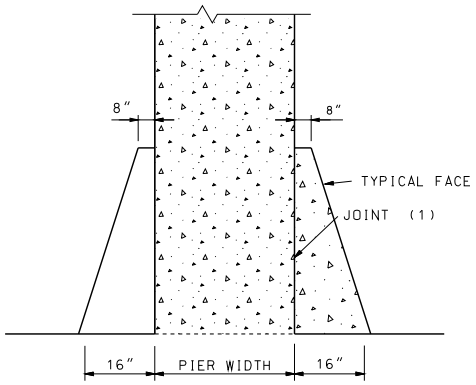

SECTION A-A

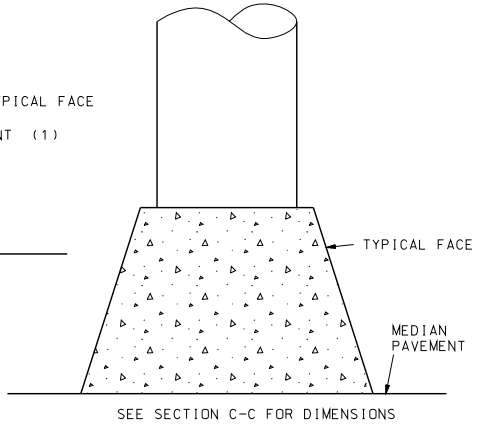

SEE SECTION C-C FOR DIMENSIONS

SECTION B-B

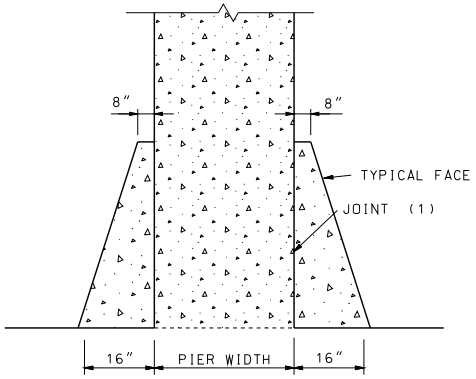

SECTION C-C

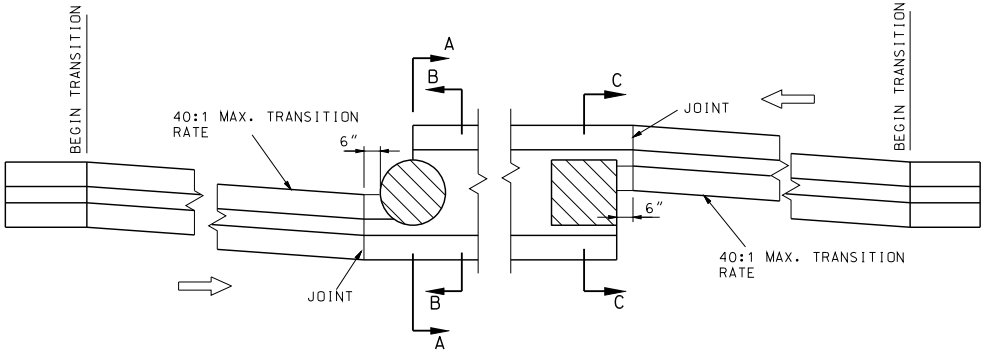

PLAN

TRANSITION DETAILS FOR PIER PROTECTION

(1) 1 IN. JOINT WITH JOINT FILLER AND SEALER

IF A SEAL IS PRESENT ON THIS SHEET IT HAS BEEN ELECTRONICALLY SEALED AND DATED.

MISSOURI HIGHWAYS AND TRANSPORTATION COMMISSION
105 WEST CAPITOL
JEFFERSON CITY, MO 65102
1-888-ASK-MODOT (1-888-275-6636)

STATE OF MISSOURI
KATHRYN PHILLIPS HARVEY
NUMBER PE-23751
PROFESSIONAL ENGINEER
THIS SHEET WAS SIGNED, SEALED AND DATED ELECTRONICALLY.

PERMANENT CONCRETE TRAFFIC BARRIER

TYPE C

DATE EFFECTIVE: 08/01/2012
DATE PREPARED: 7/19/2012

617.10H

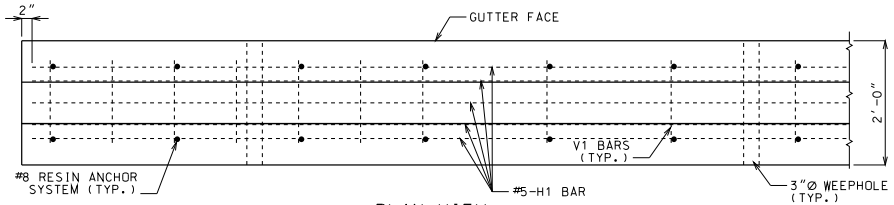

PLAN VIEW
NOTE: GUTTER NOT SHOWN FOR CLARITY.

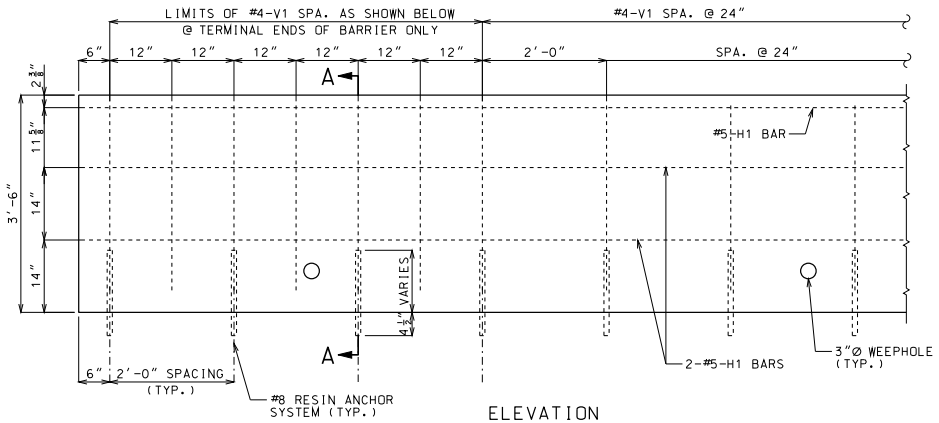

ELEVATION
REINFORCING DETAILS

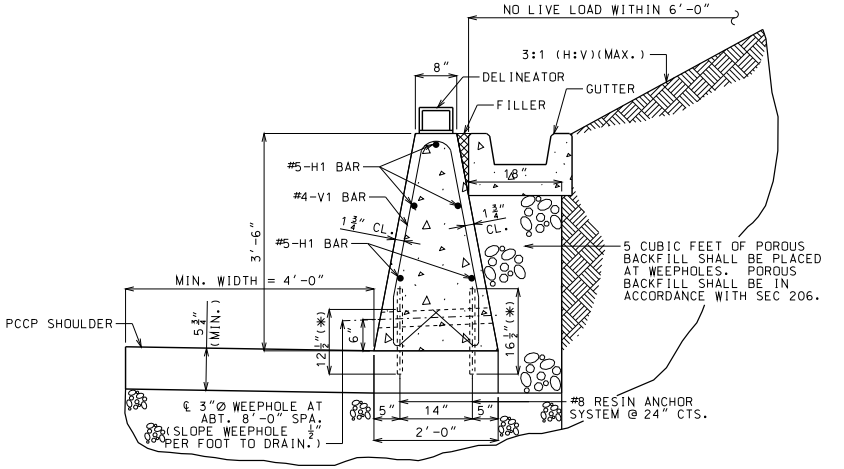

(*) EMBED ANCHOR 4½" BELOW PCCP SHOULDER.

SECTION A-A
(FOR SLOPING AND NONSLOPING BACKSLOPE)

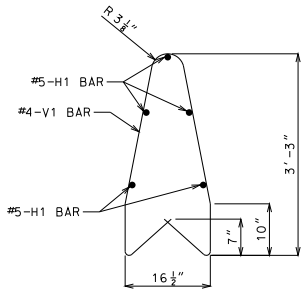

PART SECTION OF
#4-V1 BAR

GENERAL NOTES:

CONCRETE SHALL BE CLASS B F'C = 4,000 PSI.

ALL REINFORCEMENT SHALL BE GRADE 60 EPOXY COATED.

ANGLE OF INTERNAL FRICTION, ϕF ≥ 27° FOR BACKFILL MATERIAL.

MINIMUM CLEARANCE TO REINFORCING STEEL SHALL BE 1 1/2 ", UNLESS OTHERWISE SHOWN.

BAR SPLICES SHALL BE A MINIMUM OF 24 TIMES THE NOMINAL DIAMETER OR THE BAR.

ANY METHOD DEVISED BY THE CONTRACTOR AND APPROVED BY THE ENGINEER THAT WILL ASSURE THE LONGITUDINAL REINFORCING STEEL WILL BE POSITIONED ±1/2 INCH AS DIMENSIONED WILL BE SATISFACTORY.

THE CONTRACTOR HAS THE OPTION TO SLIP-FORM THE BARRIER. IN WHICH CASE, ADDITIONAL REINFORCEMENT MAY BE TIED TO THE UPPER TWO-THIRDS FO THE REINFORCING CAGE TO PROVIDE BRACING.

THIS BARRIER SHALL NOT BE USED TO SUPPORT HIGHWAY LIGHTING POLES.

THIS BARRIER SHALL NOT BE USED FOR BRIDGE ROADWAY APPLICATIONS.

SAWED JOINTS SHALL BE SPACED AT 15'-0". SEE MISSOURI STANDARD PLANS FOR SAWED JOINT DETAIL.

TYPE C BARRIER MODIFIED RETAINING WALL WITH NONMOMENT SLAB SHALL BE USED ONLY AT LOCATIONS SHOWN ON PLANS.

FOR DELINEATOR DETAILS, SEE SHEET NO. 1 OF THE MISSOURI STANDARD PLAN 617.10.

RESIN ANCHOR SYSTEM SHALL BE DRILLED IN THE PAVEMENT.

WHEN CURB HEIGHT EXCEEDS 42" OR SLOPE EXCEEDS 3:1 (H:V) OR LIVE LOAD IS WITHIN 6'-0", CONTACT BRIDGE DIVISION FOR SPECIAL DESIGN.

IF A SEAL IS PRESENT ON THIS SHEET IT HAS BEEN ELECTRONICALLY SEALED AND DATED.

MISSOURI HIGHWAYS AND TRANSPORTATION COMMISSION
105 WEST CAPITOL
JEFFERSON CITY, MO 65102
1-888-ASK-MODOT (1-888-275-6636)

STATE OF MISSOURI
KATHRYN PHILLIPS HARVEY
NUMBER PE-2007051
PROFESSIONAL ENGINEER
THIS SHEET HAS BEEN SIGNED, SEALED AND DATED ELECTRONICALLY.

PERMANENT CONCRETE TRAFFIC BARRIER

TYPE C AS RETAINING WALL

DATE EFFECTIVE: 08/01/2012
DATE PREPARED: 7/19/2012

617.10H

SHEET NO. 6 OF 12

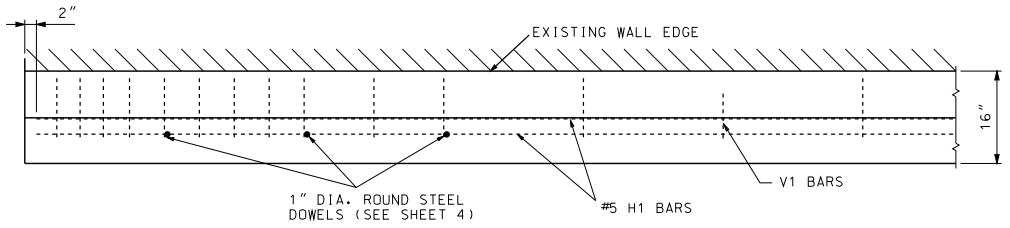

PLAN VIEW

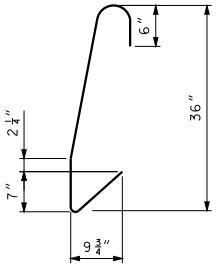

V1 BAR (#4)

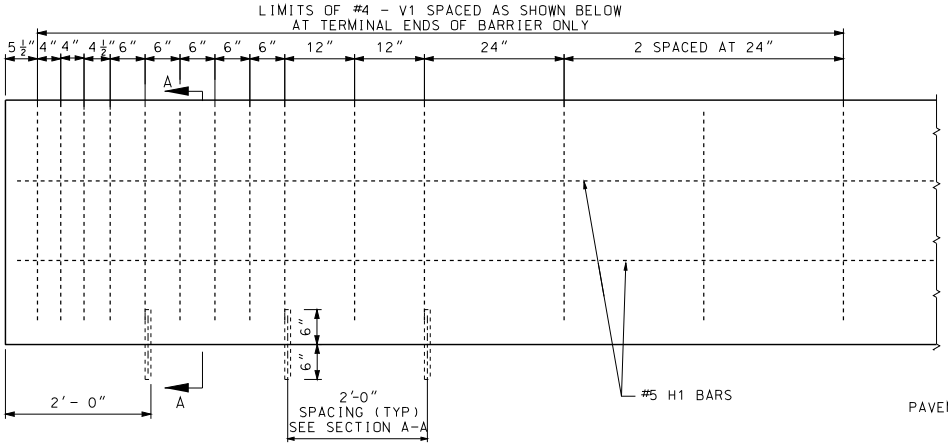

ELEVATION

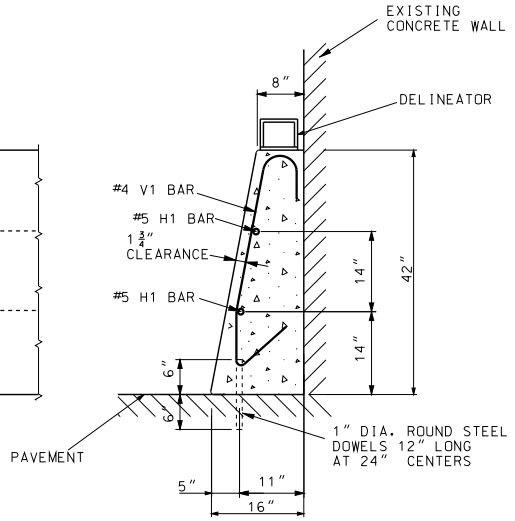

SECTION A-A

REINFORCING DETAILS

NOTES:

BAR SPLICES SHALL BE A MINIMUM OF 24 TIMES THE NOMINAL DIAMETER OF THE BAR.

ANY METHOD DEVISED BY THE CONTRACTOR AND APPROVED BY THE ENGINEER THAT WILL ASSURE THE LONGITUDINAL REINFORCING STEEL WILL BE POSITIONED ± ½ INCH AS DIMENSIONED WILL BE SATISFACTORY.

THE CONTRACTOR HAS THE OPTION TO SLIP-FORM THE BARRIER. IN WHICH CASE, ADDITIONAL REINFORCEMENT MAY BE TIED TO THE UPPER TWO-THIRDS OF THE REINFORCING CAGE TO PROVIDE BRACING.

THIS BARRIER SHALL NOT BE USED TO SUPPORT HIGHWAY LIGHTING POLES.

THIS BARRIER SHALL NOT BE USED FOR BRIDGE ROADWAY APPLICATIONS.

SAWED JOINTS SHALL BE LOCATED AT PAVEMENT TRANSVERSE JOINTS.

TYPE D SHALL BE USED ONLY AT LOCATIONS SHOWN ON PLANS.

FOR DELINEATOR DETAILS, SEE SHEET 1.

MISSOURI HIGHWAYS AND TRANSPORTATION COMMISSION
105 WEST CAPITOL
JEFFERSON CITY, MO 65102
1-888-ASK-MODOT (1-888-275-6636)

STATE OF MISSOURI
KATHRYN PHILLIPS HARVEY
NUMBER PE-23751
PROFESSIONAL ENGINEER
THIS SHEET HAS BEEN SIGNED, SEALED AND DATED ELECTRONICALLY.

PERMANENT CONCRETE TRAFFIC BARRIER

TYPE D

DATE EFFECTIVE: 08/01/2012
DATE PREPARED: 7/19/2012

617.10H

SHEET NO. 7 OF 12

IF A SEAL IS PRESENT ON THIS SHEET IT HAS BEEN ELECTRONICALLY SEALED AND DATED.

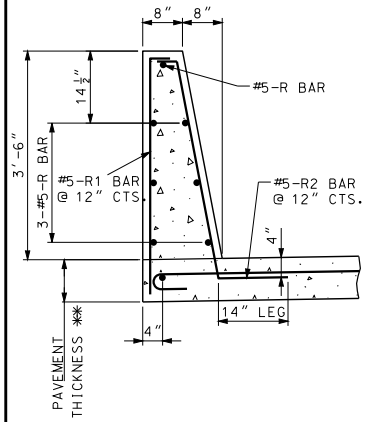

PART SECTION THROUGH BARRIER

TABLE A TRANSVERSE PAVEMENT REINFORCEMENT	
PAVEMENT THICKNESS **	BAR SIZE & SPACING
8″	#5 @ 4″
9″	#5 @ 5″
10″	#5 @ 6″
11″	#5 @ 7″
12″	#6 @ 12″
≥ 13″	#6 @ 12″

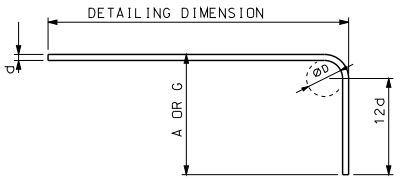

90° HOOKS

END HOOK DIMENSIONS				
BAR SIZE	D (IN.)	ALL GRADES		
		180° HOOKS		90° HOOKS
		A OR G	J	A OR G
#5	3¾″	7″	5″	10″
#6	4½″	8″	6″	12″

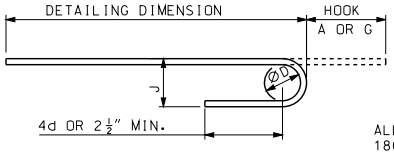

180° HOOKS

ALL STANDARD HOOKS AND BENDS OTHER THAN 180° TO BE BENT WITH THE SAME PROCEDURE AS FOR 90° STANDARD HOOKS.

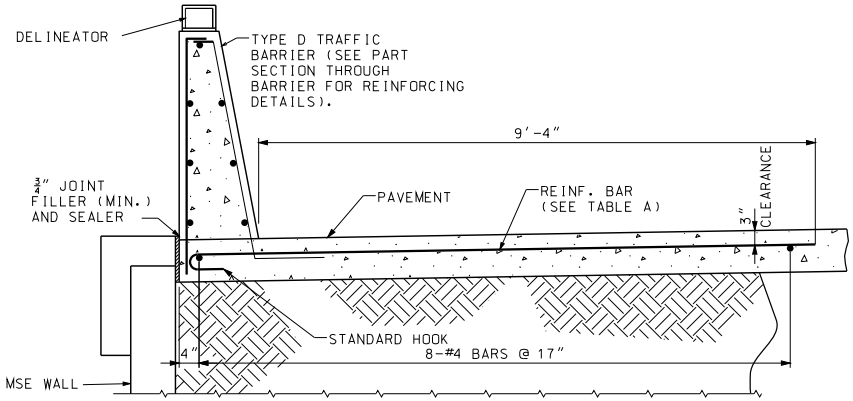

TYPE D (MSE WALL) TRAFFIC BARRIER ON TOP OF MSE WALL

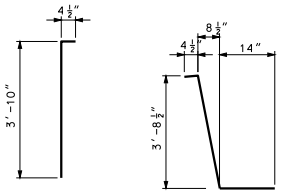

#5 R1 #5 R2

NOTES:

MINIMUM CLEARANCE TO REINFORCING STEEL SHALL BE 1½″, UNLESS OTHERWISE SHOWN.

** SEE ROADWAY PAVEMENT DESIGN.

TYPE D SHALL BE USED ONLY AT LOCATIONS SHOWN ON PLANS.

FOR DELINEATOR DETAILS, SEE SHEET 1.

TABLE B TRANSVERSE PAVEMENT REINFORCEMENT	
PAVEMENT THICKNESS **	BAR SIZE & SPACING
8″	#6 @ 5″
9″	#6 @ 6″
10″	#5 @ 6″
11″	#6 @ 8″
12″	#6 @ 9″
≥ 13″	#6 @ 9″

MISSOURI HIGHWAYS AND TRANSPORTATION COMMISSION
105 WEST CAPITOL
JEFFERSON CITY, MO 65102
1-888-ASK-MODOT (1-888-275-6636)

STATE OF MISSOURI KATHRYN PHILLIPS HARVEY NUMBER PE-23751 PROFESSIONAL ENGINEER
THIS SHEET HAS BEEN SIGNED, SEALED AND DATED ELECTRONICALLY.

PERMANENT CONCRETE TRAFFIC BARRIER

TYPE D ATOP MSE WALL

DATE EFFECTIVE: 08/01/2012
DATE PREPARED: 8/7/2012

617.10H

SHEET NO. 8 OF 12

IF A SEAL IS PRESENT ON THIS SHEET IT HAS BEEN ELECTRONICALLY SEALED AND DATED.

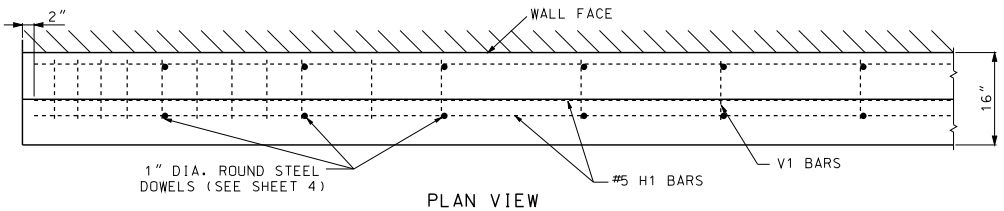

PLAN VIEW

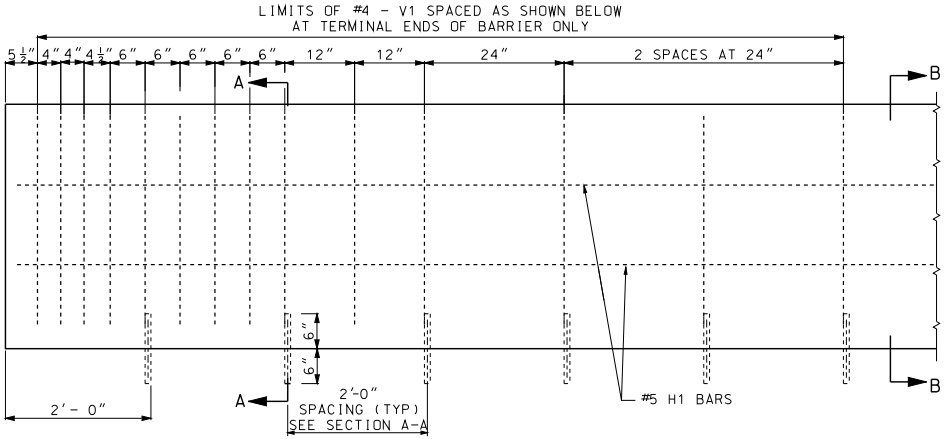

ELEVATION

REINFORCING DETAILS

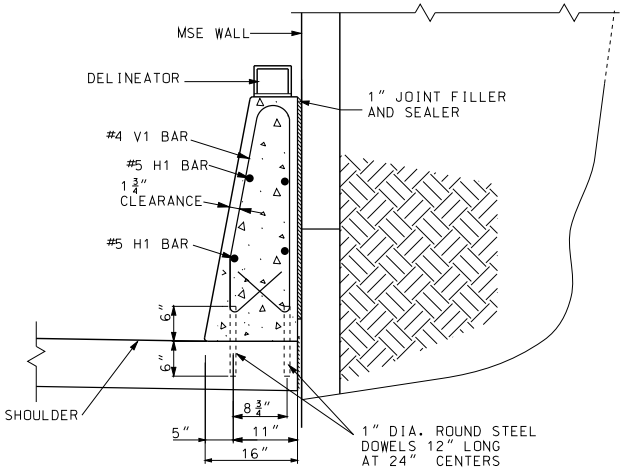

SECTION A-A

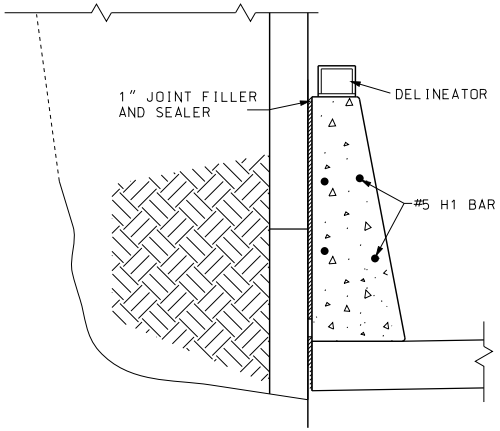

SECTION B-B

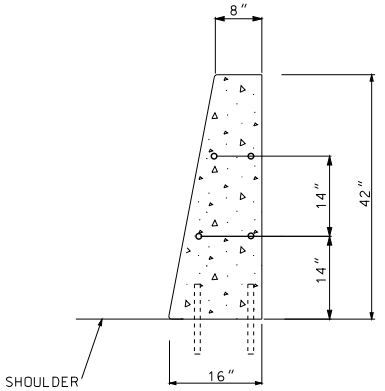

TYPE D TYPICAL SECTION

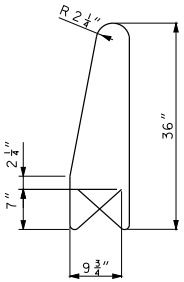

V1 BAR (#4)

MINIMUM CLEARANCE TO REINFORCING STEEL SHALL BE 1½", UNLESS OTHERWISE SHOWN.

NOTES:

BAR SPLICES SHALL BE A MINIMUM OF 24 TIMES THE NOMINAL DIAMETER OF THE BAR.

ANY METHOD DEVISED BY THE CONTRACTOR AND APPROVED BY THE ENGINEER THAT WILL ASSURE THE LONGITUDINAL REINFORCING STEEL WILL BE POSITIONED ± ½ INCH AS DIMENSIONED WILL BE SATISFACTORY.

THE CONTRACTOR HAS THE OPTION TO SLIP-FORM THE BARRIER. IN WHICH CASE, ADDITIONAL REINFORCEMENT MAY BE TIED TO THE UPPER TWO-THIRDS OF THE REINFORCING CAGE TO PROVIDE BRACING.

THIS BARRIER SHALL NOT BE USED TO SUPPORT HIGHWAY LIGHTING POLES.

THIS BARRIER SHALL NOT BE USED FOR BRIDGE ROADWAY APPLICATIONS.

SAWED JOINTS SHALL BE SPACED AT 15'-0". SEE STANDARD PLANS FOR SAWED JOINT DETAIL

TYPE D BARRIER SHALL BE USED ONLY AT LOCATIONS SHOWN ON PLANS.

FOR DELINEATOR DETAILS, SEE STANDARD PLANS.

MISSOURI HIGHWAYS AND TRANSPORTATION COMMISSION
105 WEST CAPITOL
JEFFERSON CITY, MO 65102
1-888-ASK-MODOT (1-888-275-6636)

STATE OF MISSOURI
KATHRYN PHILLIPS HARVEY
NUMBER PE-23751
PROFESSIONAL ENGINEER
THIS SHEET HAS BEEN SIGNED, SEALED AND DATED ELECTRONICALLY.

PERMANENT CONCRETE TRAFFIC BARRIER

TYPE D BESIDE MSE WALL

DATE EFFECTIVE:	08/01/2012	617.10H	SHEET NO.
DATE PREPARED:	7/19/2012		9 OF 12

IF A SEAL IS PRESENT ON THIS SHEET IT HAS BEEN ELECTRONICALLY SEALED AND DATED.

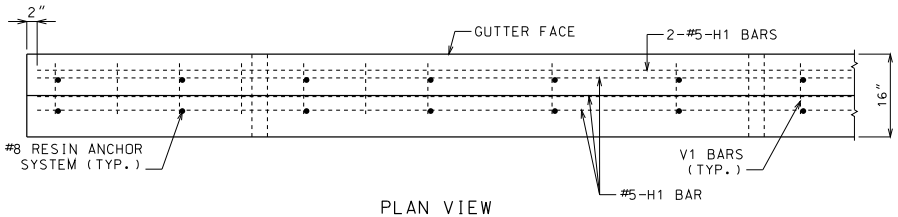

PLAN VIEW

NOTE: GUTTER NOT SHOWN FOR CLARITY.

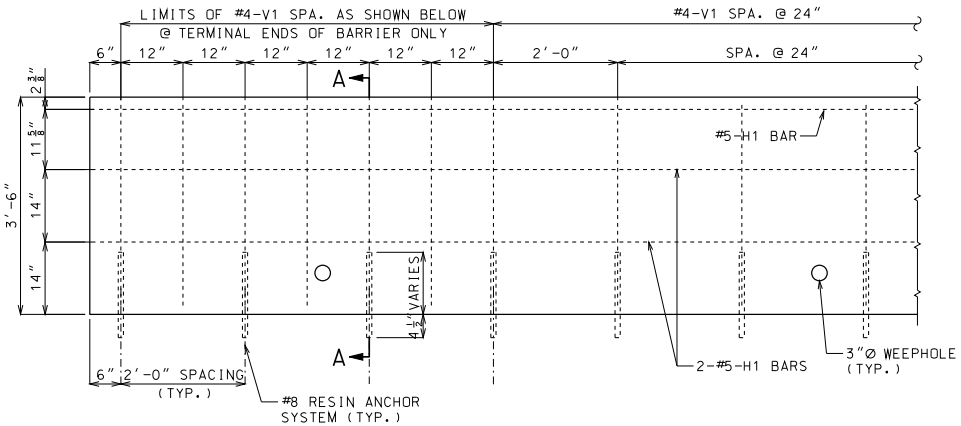

ELEVATION
REINFORCING DETAILS

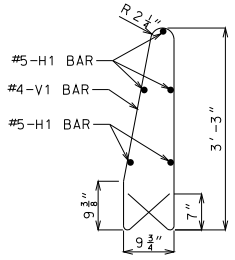

PART SECTION OF
#4-V1 BAR

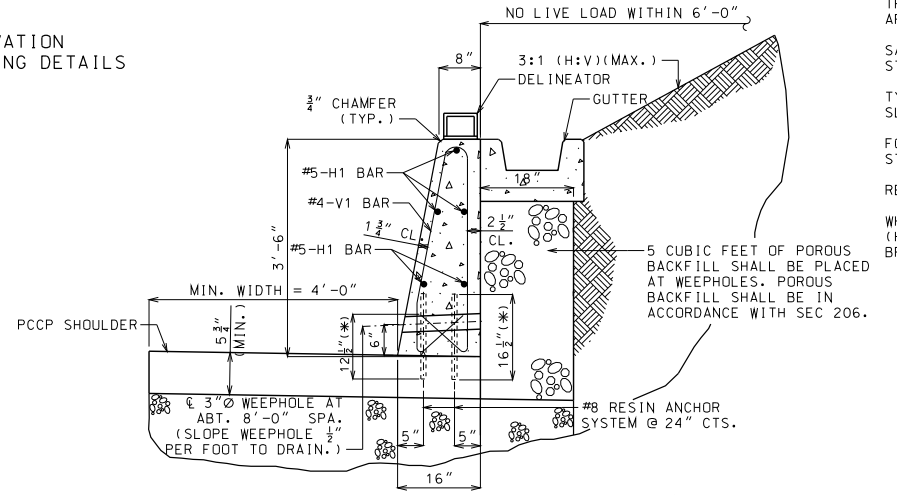

SECTION A-A
(FOR SLOPING AND NONSLOPING BACKSLOPE)

(*) EMBED ANCHOR 4½" BELOW PCCP SHOULDER.

GENERAL NOTES:

CONCRETE SHALL BE CLASS B f'c = 4,000 PSI.

ALL REINFORCEMENT SHALL BE GRADE 60 EPOXY COATED.

ANGLE OF INTERNAL FRICTION, Φf ≥ 30° FOR BACKFILL MATERIAL.

MINIMUM CLEARANCE TO REINFORCING STEEL SHALL BE 1-1/2", UNLESS OTHERWISE SHOWN.

BAR SPLICES SHALL BE A MINIMUM OF 24 TIMES THE NOMINAL DIAMETER OR THE BAR.

ANY METHOD DEVISED BY THE CONTRACTOR AND APPROVED BY THE ENGINEER THAT WILL ASSURE THE LONGITUDINAL REFORCING STEEL WILL BE POSITIONED ±1/2 INCH AS DIMENSIONED WILL BE SATISFACTORY.

THE CONTRACTOR HAS THE OPTION TO SLIP-FORM THE BARRIER. IN WHICH CASE, ADDITIONAL REINFORCEMENT MAY BE TIED TO THE UPPER TWO-THIRDS OF THE REINFORCING CAGE TO PROVIDE BRACING.

THIS BARRIER SHALL NOT BE USED TO SUPPORT HIGHWAY LIGHTING POLES.

THIS BARRIER SHALL NOT BE USED FOR BRIDGE ROADWAY APPLICATION.

SAWED JOINTS SHALL BE SPACED AT 15'-0". SEE MISSOURI STANDARD PLANS FOR SAWED JOINT DETAIL.

TYPE D A BARRIER MODIFIED RETAINING WALL WITH NONMOMENT SLAB SHALL BE USED ONLY AT LOCATIONS SHOWN ON PLANS.

FOR DELINEATOR DETAILS, SEE SHEET NO. 1 OF THE MISSOURI STANDARD PLAN 617.10.

RESIN ANCHOR SYSTEM SHALL BE DRILLED IN THE PAVEMENT.

WHEN CURB HEIGHT EXCEEDS 42" OR SLOPE EXCEEDS 3:1 (H:V) OR LIVE LOAD IS WITHIN 6'-0", CONTACT BRIDGE DIVISION FOR SPECIAL DESIGN.

MISSOURI HIGHWAYS AND TRANSPORTATION COMMISSION
105 WEST CAPITOL
JEFFERSON CITY, MO 65102
1-888-ASK-MODOT (1-888-275-6636)

STATE OF MISSOURI
KATHRYN PHILLIPS HARVEY
NUMBER PE-23751
PROFESSIONAL ENGINEER
THIS SHEET HAS BEEN SIGNED, SEALED AND DATED ELECTRONICALLY.

PERMANENT CONCRETE TRAFFIC BARRIER

TYPE D AS RETAINING WALL

DATE EFFECTIVE:	08/01/2012	617.10H	SHEET NO. 10 OF 12
DATE PREPARED:	7/19/2012		

IF A SEAL IS PRESENT ON THIS SHEET IT HAS BEEN ELECTRONICALLY SEALED AND DATED.

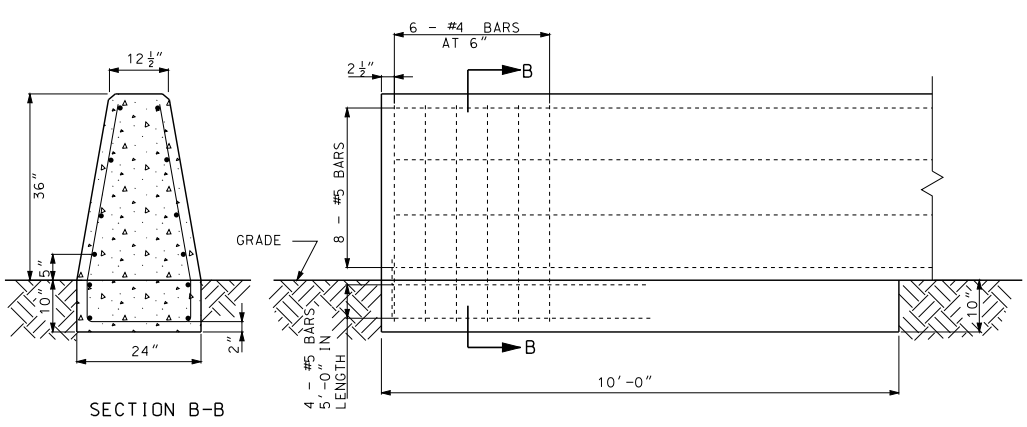

CONCRETE BARRIER END ANCHORAGE ON GRADE

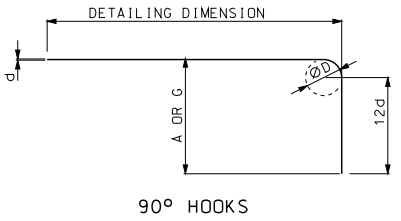

90° HOOKS

END HOOK DIMENSIONS				
BAR SIZE	D (IN.)	ALL GRADES		
		180° HOOKS		90° HOOKS
		A OR G	J	A OR G
#5	3¾"	7"	5"	10"
#6	4½"	8"	6"	12"

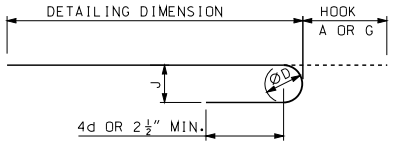

180° HOOKS

ALL STANDARD HOOKS AND BENDS OTHER THAN 180° TO BE BENT WITH THE SAME PROCEDURE AS FOR 90° STANDARD HOOKS.

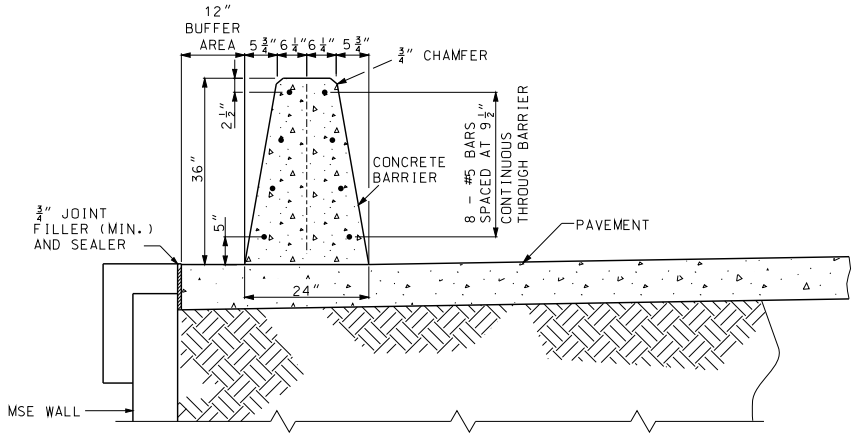

TRAFFIC BARRIER ON TOP OF MSE WALL

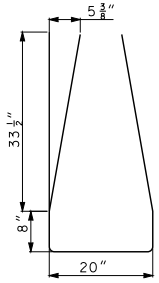

#4 BARS

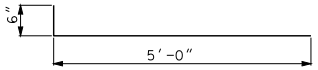

#5 BARS

GENERAL NOTES:

MINIMUM CLEARANCE TO REINFORCING STEEL SHALL BE 1½", UNLESS OTHERWISE SHOWN.

A 12" BUFFER REQUIRED WITHIN THE LIMITS OF THE TRAFFIC BARRIER EXCLUDING THE END ANCHORAGE SECTIONS.

FOR DELINEATOR DETAILS, SEE STANDARD PLAN 617.10.

PAVEMENT SURFACE DIFFERENTIAL SHALL NOT EXCEED 1½".

BAR SPLICES SHALL BE A MINIMUM OF 24 TIMES THE NOMINAL DIAMETER OF THE BAR.

MISSOURI HIGHWAYS AND TRANSPORTATION COMMISSION
105 WEST CAPITOL
JEFFERSON CITY, MO 65102
1-888-ASK-MODOT (1-888-275-6636)

STATE OF MISSOURI
KATHRYN PHILLIPS HARVEY
NUMBER PE-23751
PROFESSIONAL ENGINEER
THIS SHEET HAS BEEN SIGNED, SEALED AND DATED ELECTRONICALLY.

PERMANENT CONCRETE TRAFFIC BARRIER

TYPE E ATOP MSE WALL

DATE EFFECTIVE:	08/01/2012	617.10H	SHEET NO. 11 OF 12
DATE PREPARED:	7/19/2012		

IF A SEAL IS PRESENT ON THIS SHEET IT HAS BEEN ELECTRONICALLY SEALED AND DATED.

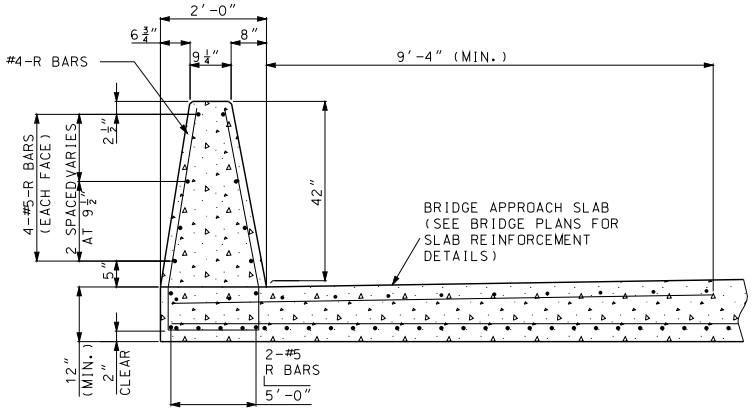

SECTION A-A

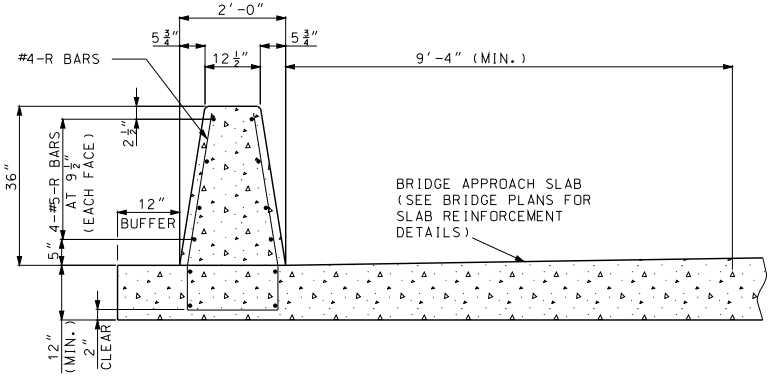

SECTION B-B

NOTE: SEE 'CONCRETE BARRIER END ANCHORAGE ON GRADE', SHEET 11 OF 12, FOR REINFORCMENT DETAILS.

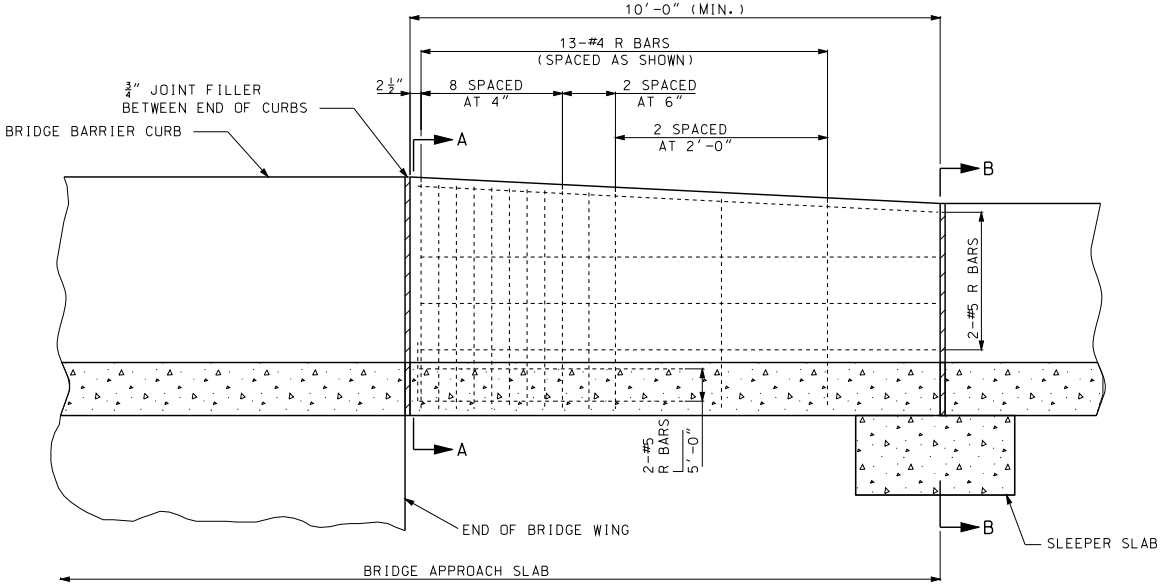

CONCRETE BARRIER END ANCHORAGE AT BRIDGE

GENERAL NOTES:

ANCHORAGE SHALL BE 10′ LONG. IF 10′ OF BRIDGE APPROACH SLAB IS NOT AVAILABLE BEYOND THE WINGS, THE SLAB LENGTH SHALL BE ADJUSTED ACCORDINGLY. SEE BRIDGE PLANS.

A 12″ BUFFER REQUIRED WITHIN THE LIMITS OF THE TRAFFIC BARRIER EXCLUDING THE END ANCHORAGE SECTIONS.

MISSOURI HIGHWAYS AND TRANSPORTATION COMMISSION
105 WEST CAPITOL
JEFFERSON CITY, MO 65102
1-888-ASK-MODOT (1-888-275-6636)

STATE OF MISSOURI
KATHRYN PHILLIPS HARVEY
NUMBER PE-23751
PROFESSIONAL ENGINEER
THIS SHEET HAS BEEN SIGNED, SEALED AND DATED ELECTRONICALLY.

PERMANENT CONCRETE TRAFFIC BARRIER

TYPE E ATOP MSE WALL

DATE EFFECTIVE: 08/01/2012
DATE PREPARED: 7/19/2012

617.10H

SHEET NO. 12 OF 12

IF A SEAL IS PRESENT ON THIS SHEET IT HAS BEEN ELECTRONICALLY SEALED AND DATED.

CROSS SECTION	CONDITION		TREATMENT	SIGN	
	DIFFERENTIAL	TIME		MAINLINE (2)	SIDE ROAD (3)
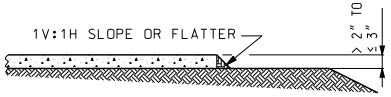	PAVEMENT EDGE DIFFERENTIAL > 2" TO ≤ 3"	NON-WORKING HOURS	WEDGE SLOPE TO 1V:1H OR FLATTER	WO8-17 (4)(5) WO8-17p (8)	NO SIGNS REQUIRED
		WORKING HOURS	NO EDGE TREATMENT REQUIRED		
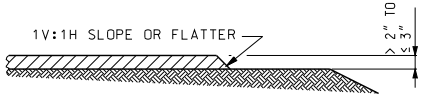	PAVEMENT EDGE DIFFERENTIAL > 2" TO ≤ 3"	NON-WORKING HOURS	WEDGE SLOPE TO 1V:1H OR FLATTER	WO8-17 (4)(5) WO8-17p (8)	NO SIGNS REQUIRED
		WORKING HOURS	NO EDGE TREATMENT REQUIRED		
	PAVEMENT EDGE DIFFERENTIAL > 3"	NON-WORKING HOURS	WEDGE SLOPE TO 1V:3H OR FLATTER	WO8-17 (4)(5) WO8-17p (8)	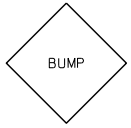 WO8-1 (4)
		WORKING HOURS	DELINEATE DIFFERENTIAL WITH CHANNELIZERS		
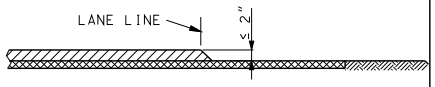	LANE LINE DIFFERENTIAL ≤ 2"	NON-WORKING AND WORKING HOURS	NO EDGE TREATMENT REQUIRED	WO8-11 (6)	NO SIGNS REQUIRED
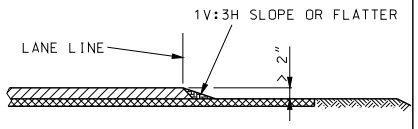	LANE LINE DIFFERENTIAL > 2"	NON-WORKING AND WORKING HOURS WHERE LANES OPEN TO TRAFFIC	WEDGE SLOPE TO 1V:3H OR FLATTER	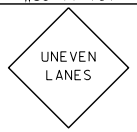 WO8-11 (6)	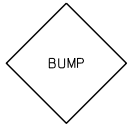 WO8-1
		NON-WORKING AND WORKING HOURS WHERE LANE CLOSED TO TRAFFIC	DELINEATE DIFFERENTIAL WITH CHANNELIZERS		
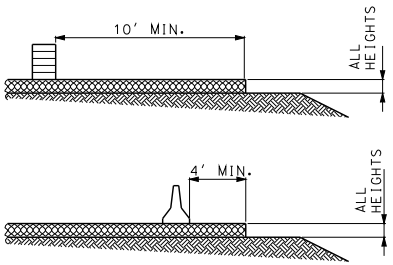	ANY PAVEMENT EDGE OR LANE LINE DIFFERENTIAL	NON-WORKING AND WORKING HOURS WHERE PLANS REQUIRE ADJACENT LANE CLOSURE WITH CHANNELIZATION OR PARTIAL LANE CLOSURE WITH BARRIER.	NO EDGE TREATMENT REQUIRED	NO SIGNS REQUIRED	NO SIGNS REQUIRED

(1) SIGNS SHALL BE VISIBLE TO TRAFFIC ONLY WHEN AND WHERE CONDITIONS EXIST.

(2) SIGNS SHALL BE SPACED AT APPROXIMATELY ONE MILE INTERVALS AND LOCATED WITHIN 150 FT. BEYOND ANY STATE ROADS. WHEN A SIGN PLACED AT THE ONE MILE INTERVAL FALLS WITHIN 1/2 MILE OF A SIGN PLACED AFTER AN INTERSECTION, THE SIGN PLACED AT THE 1/2 MILE INTERVAL MAY BE OMITTED. WHEN LOW SHOULDER/SHOULDER DROP-OFF SIGNS WITH UNEVEN LANES ARE BOTH SPECIFIED, ALTERNATING SIGN MESSAGES SHALL BE USED AT 1 MILE SPACINGS.

(3) ON SIDE ROADS WITH POSTED SPEED OF 45 MPH OR GREATER, SIGNS SHALL BE PLACED 150 FT. IN ADVANCE OF INTERSECTION WITH MAINLINE.

(4) SIGNS SHALL BE LOCATED ON THE SIDE OF THE ROADWAY WHERE THE PAVEMENT EDGE DIFFERENTIAL EXISTS. ON TWO-LANE UNDIVIDED HIGHWAYS, BACK-TO-BACK SIGNS SHALL BE PROVIDED ON THE SIDE OF THE ROADWAY, WHERE THE PAVEMENT EDGE DIFFERENTIAL EXISTS. "BACK TO BACK" SIGNS SHALL BE SEPARATED BY 7-10 FEET.

(5) SIGNS TO REMAIN VISIBLE UNTIL SHOULDER SHAPING IS COMPLETE.

(6) SIGNS SHALL BE LOCATED ON RIGHT SIDE OF NON-DIVIDED HIGHWAYS AND ON BOTH SIDES OF DIVIDED HIGHWAYS WHERE A LANE LINE DIFFERENTIAL EXISTS.

(7) FOR ADDITIONAL SIGN SPACING AND DETAILS SEE STD PLAN 620.10.

(8) WHEN THE SHOULDER DROP-OFF SIGNS ARE IN PLACE FOR GREATER THAN THREE DAYS, THE SHOULDER DROP-OFF PLAQUE SHOULD BE USED IN ADDITION WITH THE SHOULDER DROP-OFF SIGN.

LEGEND

- RIGID PAVEMENT
- FLEXIBLE PAVEMENT
- ALL PAVEMENT TYPES

IF A SEAL IS PRESENT ON THIS SHEET IT HAS BEEN ELECTRONICALLY SEALED AND DATED.

MISSOURI HIGHWAYS AND TRANSPORTATION COMMISSION
105 WEST CAPITOL
JEFFERSON CITY, MO 65102
1-888-ASK-MODOT (1-888-275-6636)

STATE OF MISSOURI
KATHRYN PHILLIPS HARVEY
NUMBER PE-23751
PROFESSIONAL ENGINEER
THIS SHEET HAS BEEN SIGNED, SEALED AND DATED ELECTRONICALLY.

PAVEMENT EDGE TREATMENT

DATE EFFECTIVE: 05/01/2012
DATE PREPARED: 3/28/2012

619.10G

SHEET NO. 1 OF 1

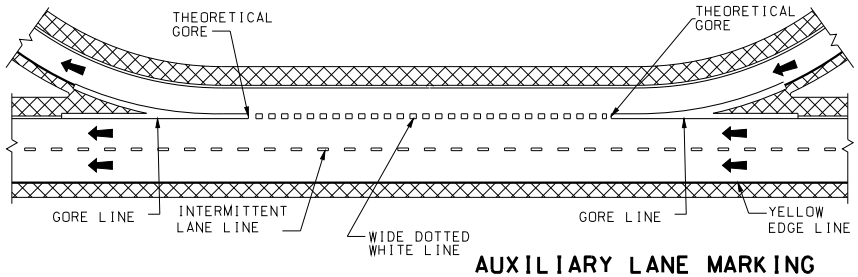

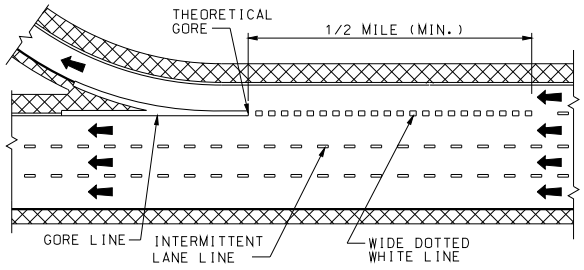

AUXILIARY LANE MARKING

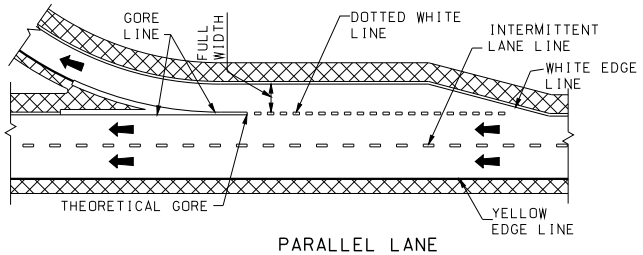

PARALLEL LANE

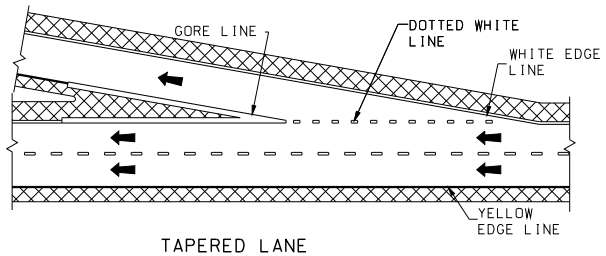

TAPERED LANE

EXIT RAMP MARKING

A = LENGTH OF ACCERLERATION LANE PLUS TAPER.

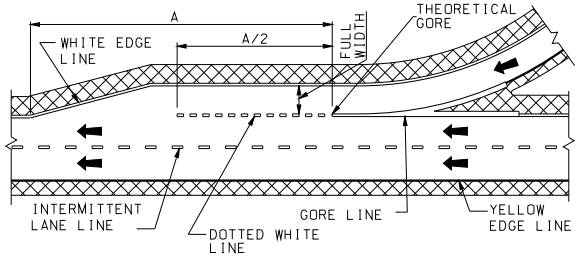

PARALLEL LANE

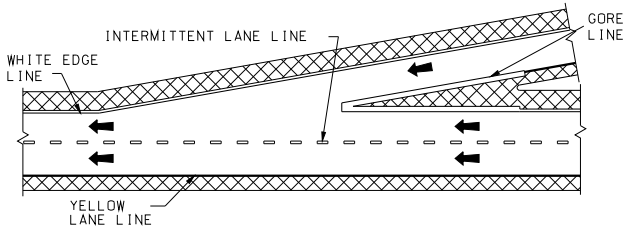

TAPERED LANE

ENTRANCE RAMP MARKING

L = LENGTH OF TAPER IN FEET.

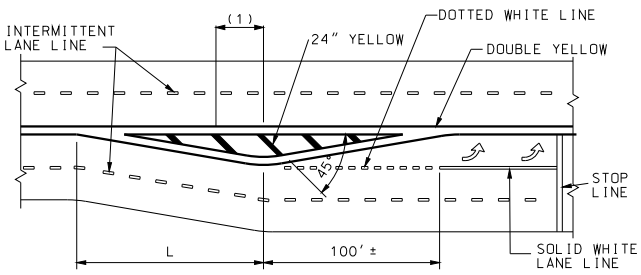

MEDIAN ISLAND MARKING

(1) 50' (TYP.) SPACE BETWEEN BARS. A MINIMUM OF 3 BARS ARE REQUIRED. IF NECESSARY, THE DISTANCE BETWEEN THE BARS SHALL BE DECREASED TO INSTALL 3 BARS.

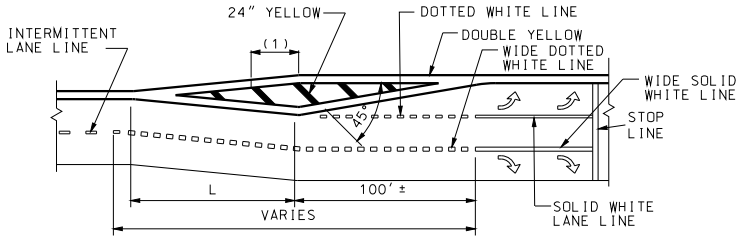

LANE DROP MARKING

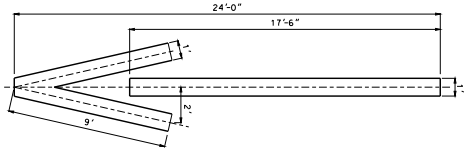

FIRST ARROW 25' FROM CROSSROAD OR STOP LINE.

MAXIMUM 3 ARROWS AT 100' INTERVALS.

ON MULTI-LANE RAMP USE ARROW IN EACH LANE.

WRONG WAY ARROWS ARE NOT USED WHEN RAMP HAS LANE USE CONTROL ARROWS.

OFF RAMP WRONG WAY ARROW

GENERAL NOTES:

DOTTED LINES SHALL BE 3 FEET IN LENGTH SEPARATED BY 9 FOOT GAPS.

REFER TO THE STANDARD PLAN 626.00 WHEN INSTALLING PAVEMENT MARKINGS OVER RUMBLE STRIPS.

WIDE LINES ARE TWICE THE WIDTH OF NORMAL LINES.

LANE LINES SHALL BE AN INTERMITTENT OR SOLID WHITE.

INTERMITTENT LINES SHALL BE 10 FEET IN LENGTH SEPARATED BY 30 FOOT GAPS.

EDGELINES SHALL BE CONTINUOUS SOLID WHITE OR YELLOW LINES. RIGHT SIDE EDGELINES SHALL BE SOLID WHITE. MEDIAN OR LEFT SIDE EDGELINES ON DIVIDED HIGHWAYS AND ON THE LEFT SIDE OF RAMPS SHALL BE SOLID YELLOW. EDGELINES SHALL BE CONTINUOUS ACROSS DRIVEWAYS AND MINOR INTERSECTING ROADS.

"NO PASSING" LINES SHALL BE CONTINUOUS SOLID YELLOW.

"NO PASSING" LINES SHALL BE PLACED AS SHOWN IN "LINE DETAIL". "NO PASSING" LINES ON A TWO-LANE, TWO-WAY HIGHWAY WHEN PASSING IS PROHIBITED IN EACH DIRECTION SHALL BE PLACED 4 INCHES APART AND THE INTERMITTENT CENTERLINE SHALL BE OMITTED.

STOP LINES SHALL BE A SOLID WHITE TRANSVERSE LINE 24 INCHES WIDE, LOCATED AT LEAST 4 FEET FROM THE NEAREST EDGE OF THE INTERSECTING ROADWAY.

CROSSWALK LINES SHALL BE SOLID WHITE TRANSVERSE LINES 6 INCHES WIDE AT LEAST 6 FEET APART. CROSSWALK LINES ON THE INTERSECTION SIDE OF THE CROSSWALK SHALL MEET AT THE CURB.

GORE LINES SHALL BE A SOLID WHITE LINE WITH A WIDTH TWICE THAT OF THE EDGELINE.

ARROWS AND WORD SYMBOLS SHALL BE SOLID WHITE.

MISSOURI HIGHWAYS AND TRANSPORTATION COMMISSION
105 WEST CAPITOL
JEFFERSON CITY, MO 65102
1-888-ASK-MODOT (1-888-275-6636)

STATE OF MISSOURI
KATHRYN PHILLIPS HARVEY
NUMBER PE-23751
PROFESSIONAL ENGINEER
THIS SHEET HAS BEEN SIGNED, SEALED AND DATED ELECTRONICALLY.

PAVEMENT MARKING

DATE EFFECTIVE:	12/01/2009	620.00J	SHEET NO.
DATE PREPARED:	11/26/2012		1 OF 5

IF A SEAL IS PRESENT ON THIS SHEET IT HAS BEEN ELECTRONICALLY SEALED AND DATED.

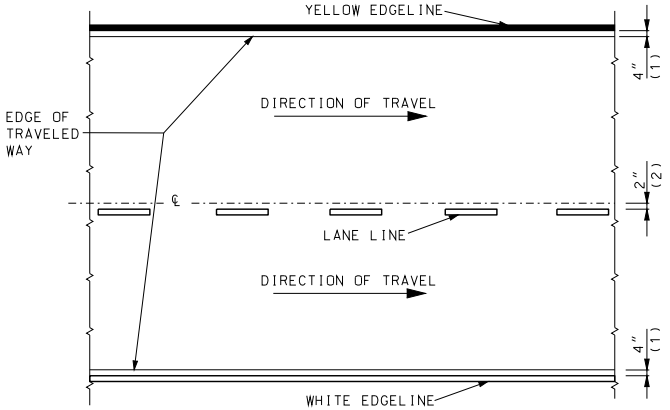

DIVIDED PAVEMENT

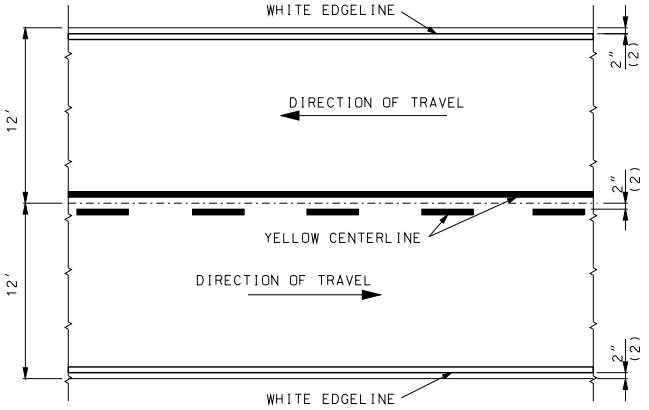

TWO-LANE TWO-WAY

TYPICAL STRIPING OFFSETS WITHOUT RUMBLE STRIPES

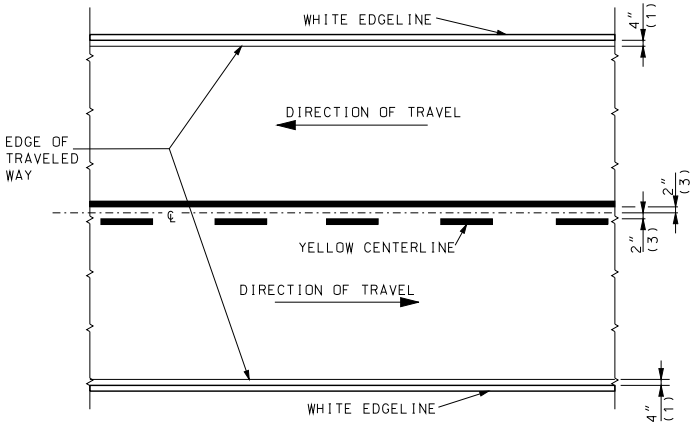

TWO-LANE TWO-WAY

TYPICAL STRIPING OFFSETS FOR RUMBLE STRIPES

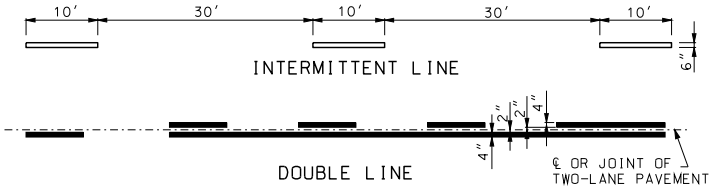

DOUBLE LINE

LINE DETAIL

LEGEND
WHITE LINE
YELLOW LINE

(1) OFFSET FROM EDGE OF TRAVELED WAY (TYP.)
(2) OFFSET FROM JOINT (TYP.)
(3) OFFSET FROM CENTERLINE (TYP.)

IF A SEAL IS PRESENT ON THIS SHEET IT HAS BEEN ELECTRONICALLY SEALED AND DATED.

MISSOURI HIGHWAYS AND TRANSPORTATION COMMISSION
105 WEST CAPITOL
JEFFERSON CITY, MO 65102
1-888-ASK-MODOT (1-888-275-6636)

STATE OF MISSOURI
KATHRYN PHILLIPS HARVEY
NUMBER PE-23751
PROFESSIONAL ENGINEER
THIS SHEET HAS BEEN SIGNED, SEALED AND DATED ELECTRONICALLY.

PAVEMENT MARKING

DATE EFFECTIVE: 12/01/2009
DATE PREPARED: 11/26/2012

620.00J

SHEET NO. 2 OF 5

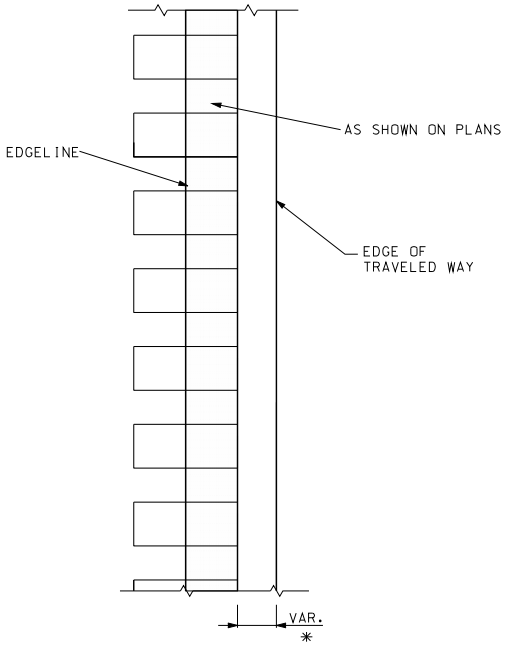

FOR SHOULDERS

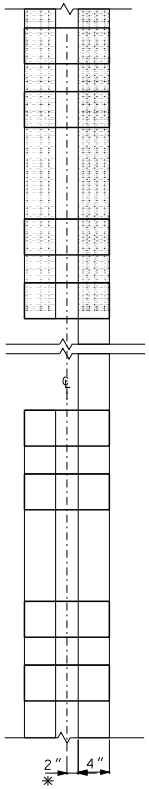

2 WAY 2 LANE

(SEE TYPICAL STRIPING
FOR RUMBLESTRIPS)

* = LATERAL DEVIATION SHALL NOT EXCEED ONE INCH IN 100 FEET.

IF A SEAL IS PRESENT ON THIS SHEET IT HAS BEEN ELECTRONICALLY SEALED AND DATED.

MISSOURI HIGHWAYS AND TRANSPORTATION COMMISSION
105 WEST CAPITOL
JEFFERSON CITY, MO 65102
1-888-ASK-MODOT (1-888-275-6636)

STATE OF MISSOURI
KATHRYN PHILLIPS HARVEY
NUMBER PE-23751
PROFESSIONAL ENGINEER
THIS SHEET HAS BEEN SIGNED, SEALED AND DATED ELECTRONICALLY.

PAVEMENT MARKING
STRIPING THROUGH RUMBLE STRIPS

DATE EFFECTIVE: 12/01/2009
DATE PREPARED: 11/26/2012

620.00J

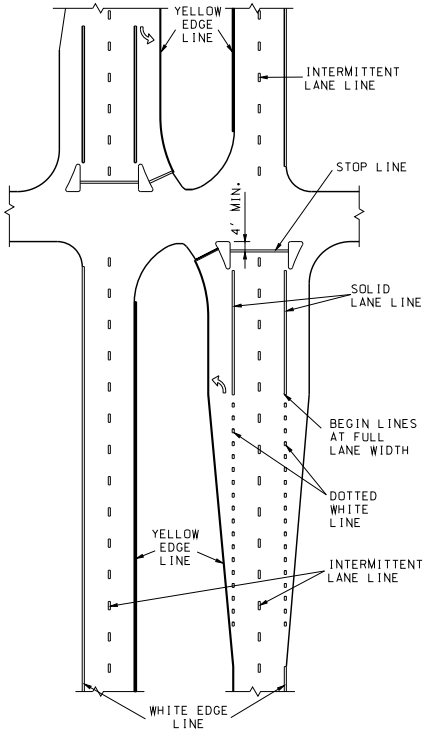

SIGNALIZED GRADE
INTERSECTION MARKING

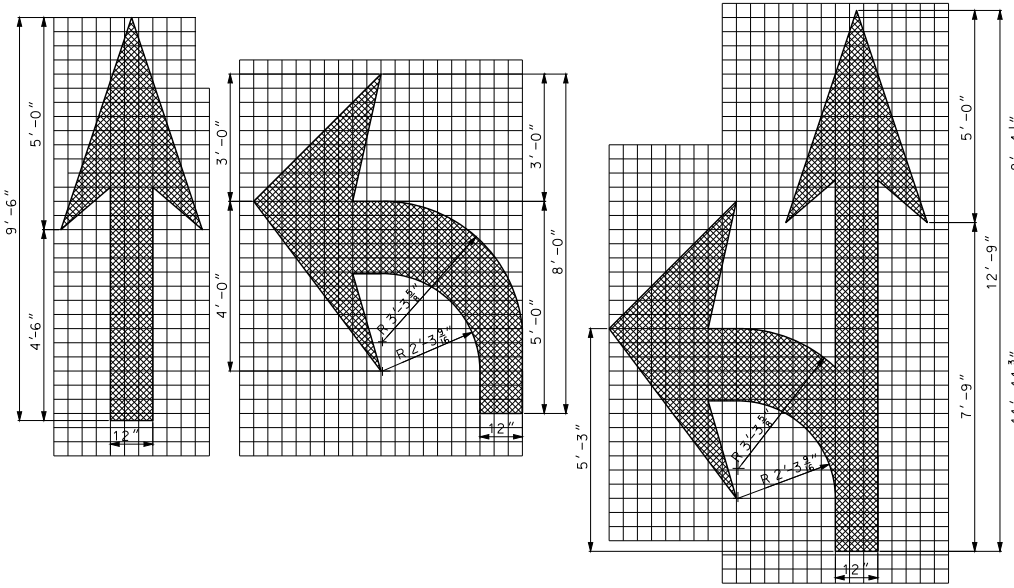

ARROW MARKINGS

TWO LANE USE CONTROL ARROWS FOR FIRST 200 FEET WITH ONE ADDITIONAL ARROW EVERY 400 FEET OF MANDATORY MOVEMENT LANE. FIRST ARROW 75 FEET FROM STOP LINE.

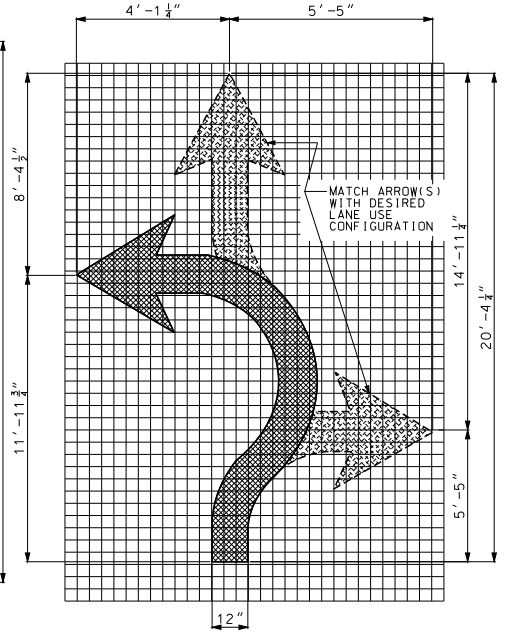

FISH-HOOK ARROW
ROUNDABOUT APPROACH MARKINGS

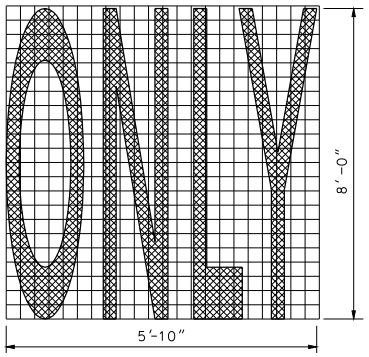

WORD MARKING
ELONGATED WORD & SYMBOL

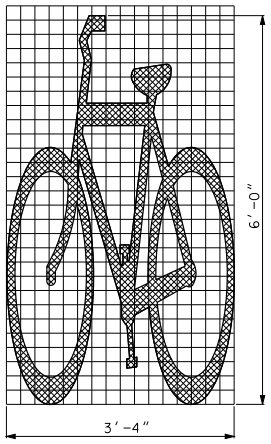

BICYCLE SYMBOL

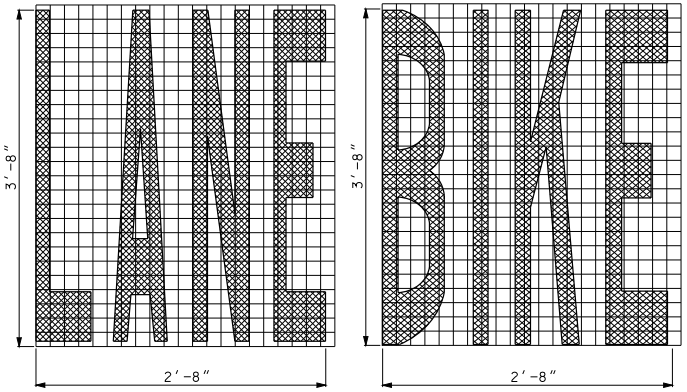

WORD MARKING
ELONGATED WORD & SYMBOL

MISSOURI HIGHWAYS AND TRANSPORTATION COMMISSION
105 WEST CAPITOL
JEFFERSON CITY, MO 65102
1-888-ASK-MODOT (1-888-275-6636)

STATE OF MISSOURI
KATHRYN PHILLIPS HARVEY
NUMBER PE-23751
PROFESSIONAL ENGINEER
THIS SHEET HAS BEEN SIGNED, SEALED AND DATED ELECTRONICALLY.

PAVEMENT MARKING

DATE EFFECTIVE: 12/01/2009	620.00J	SHEET NO. 4 OF 5
DATE PREPARED: 11/26/2012		

IF A SEAL IS PRESENT ON THIS SHEET IT HAS BEEN ELECTRONICALLY SEALED AND DATED.

1. STOP LINES SHALL BE PLACED 90° TO THE ROADWAY.
2. IF RAILROAD GATE IS PRESENT THE STOP LINE SHALL BE 8' FROM GATE.

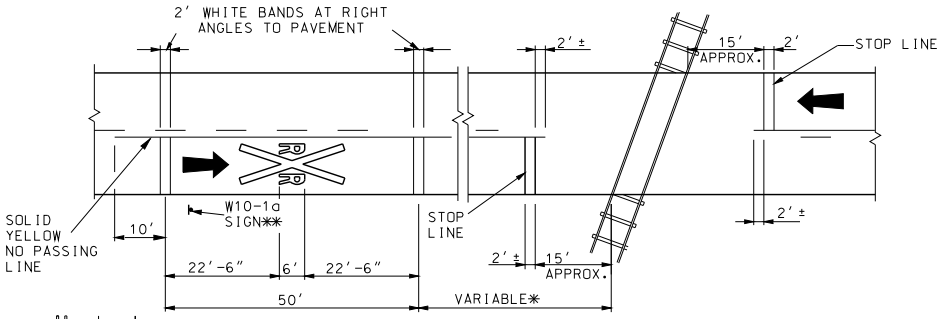

PAVEMENT DETAIL

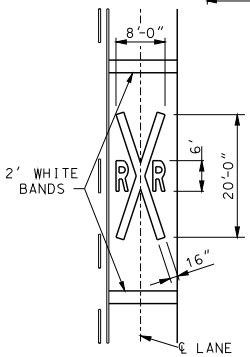

SYMBOL DETAIL

* THE DISTANCE FROM THE RAILROAD CROSSING MARKING TO THE NEAREST TRACK WILL VARY ACCORDING TO THE APPROACH SPEED AND THE SIGHT DISTANCE OF THE VEHICULAR TRAFFIC APPROACHING, BUT SHALL BE NO LESS THAN 50 FEET.
A THREE-LANE ROADWAY SHALL BE MARKED WITH A CENTERLINE FOR TWO-LANE APPROACH OPERATION ON THE APPROACH TO A CROSSING. ON MULTI-LANE ROADWAYS THE TRANSVERSE BANDS SHALL EXTEND ACROSS ALL APPROACH LANES, AND INDIVIDUAL "R X R" SYMBLOLS SHALL BE USED IN EACH APPROACH LANE.

** PLACEMENT OF W10-1a SIGN BY OTHERS.

RAILROAD GRADE CROSSING

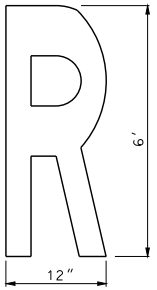

LETTER DETAIL

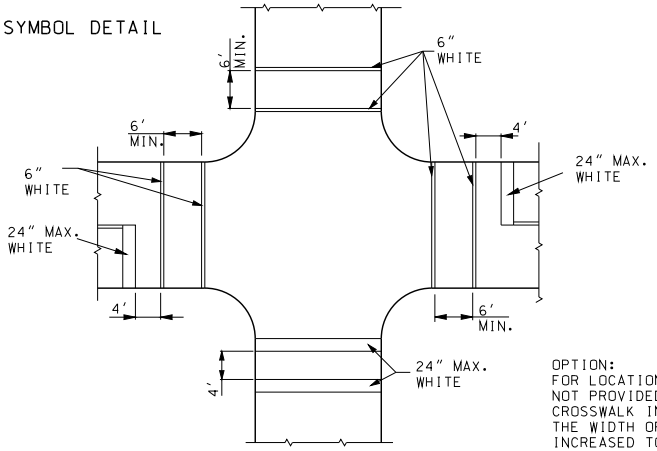

SOLID WHITE
PEDESTRIAN CROSSWALK

OPTION:
FOR LOCATIONS WHERE STOP BARS ARE NOT PROVIDED, SPEEDS EXCEED 35 MPH, OR CROSSWALK IN AN UNEXPECTED LOCATION, THE WIDTH OF THE CROSSWALK MARKINGS MAY BE INCREASED TO 24 INCHES.

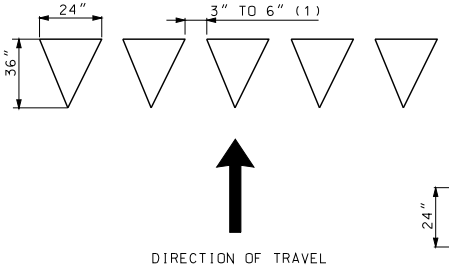

24 INCH YIELD LINE TRIANGLES

(1) TRIANGLES SHALL BE UNIFORMLY SPACED AND COVER THE COMPLETE WIDTH OF THE TRAVEL LANE. SPACING SHALL BE ADJUSTED SO THERE ARE NO PARTIAL TRIANGLES WITHIN THE YIELD MARKING.

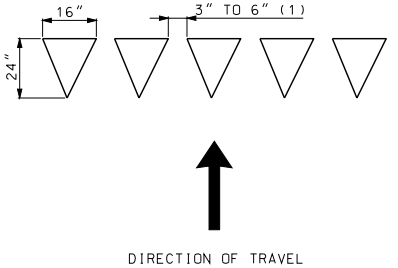

16 INCH YIELD LINE TRIANGLES

YIELD LINE TRIANGLES

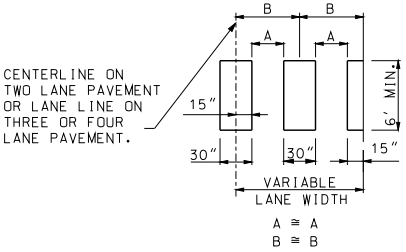

WHITE MIDBLOCK (ZEBRA)

MISSOURI HIGHWAYS AND TRANSPORTATION COMMISSION
105 WEST CAPITOL
JEFFERSON CITY, MO 65102
1-888-ASK-MODOT (1-888-275-6636)

STATE OF MISSOURI
KATHRYN PHILLIPS HARVEY
NUMBER PE-23751
PROFESSIONAL ENGINEER
THIS SHEET HAS BEEN SIGNED, SEALED AND DATED ELECTRONICALLY.

PAVEMENT MARKING

DATE EFFECTIVE: 12/01/2009
DATE PREPARED: 11/26/2012

620.00J

SHEET NO. 5 OF 5

IF A SEAL IS PRESENT ON THIS SHEET IT HAS BEEN ELECTRONICALLY SEALED AND DATED.

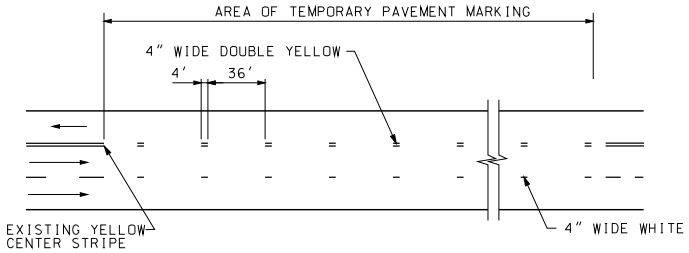

2-LANE SECTION WITH AUXILARY LANE

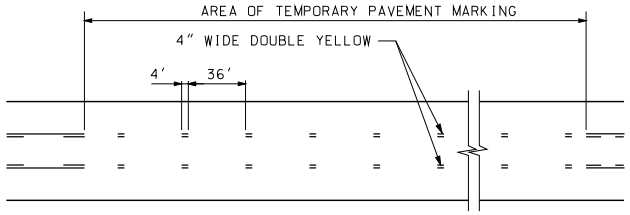

3-LANE SECTION

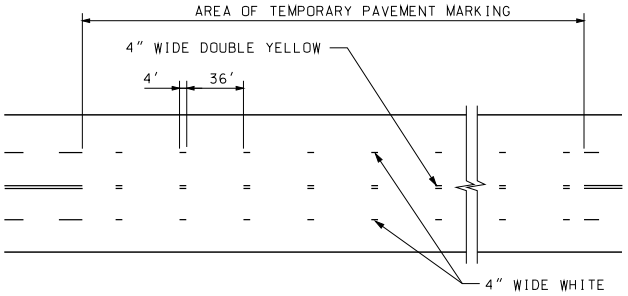

4-LANE SECTION

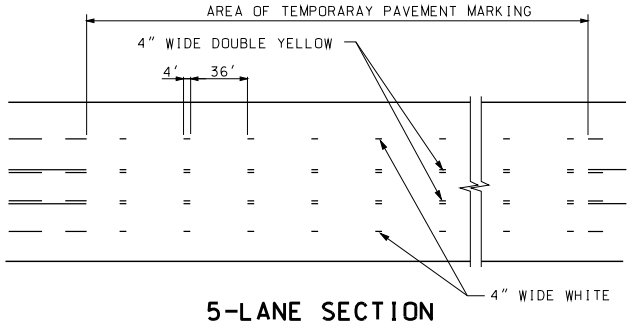

5-LANE SECTION

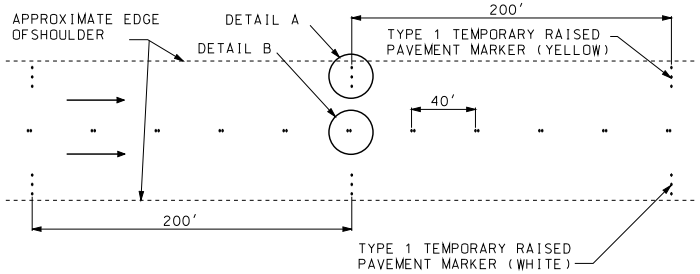

EDGE LINES ON MULTILANE DIVIDED SECTIONS

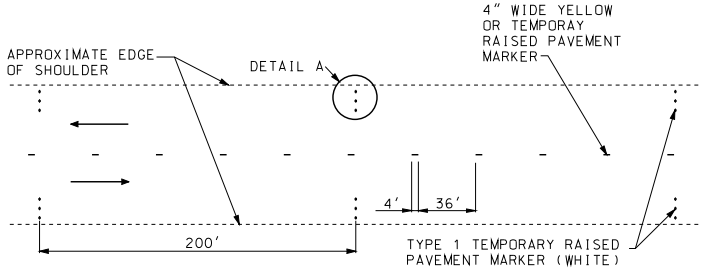

EDGE LINES ON TWO-WAY SECTIONS WITH PAVED SHOULDERS GREATER THAN 4 FEET WIDE

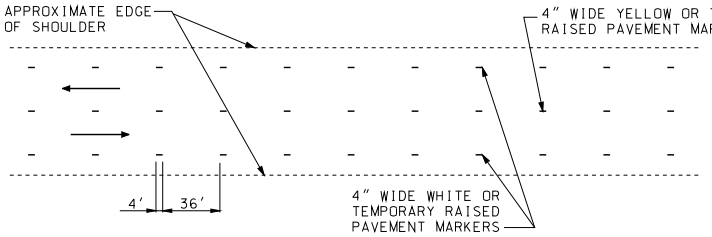

EDGE LINES ON TWO-WAY SECTIONS WITH AGGREGATE OR PAVED SHOULDERS 4 FEET OR LESS

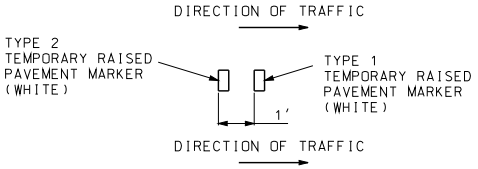

DETAIL B

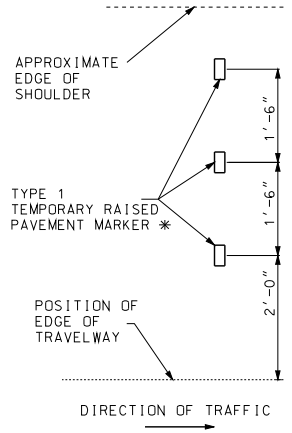

DETAIL A

✳ THREE TYPE 1 TEMPORARY RAISED PAVEMENT MARKERS SHALL BE USED IF SHOULDER IS 6' OR WIDER. OTHERWISE, USE TWO TYPE 1 TEMPORARY RAISED PAVEMENT MARKERS.

GENERAL NOTES:

INTERMEDIATE LIFTS FOR ALL PROJECTS, TEMPORARY PAVEMENT MARKINGS SHOULD EITHER BE SHORT TERM MARKING TAPE, TEMPORARY RAISED PAVEMENT MARKERS (TRPM) OR PAINT. IF USED, TRPM SHALL BE REMOVED BEFORE THE NEXT LIFT IS INSTALLED.

FOR TWO-LANE TWO-WAY ROADWAYS, TEMPORARY RAISED PAVEMENT MARKERS, IF USED, SHALL BE INSTALLED IN ACCORDANCE WITH SECTION 620 OF THE MISSOURI STANDARD SPECIFICATIONS FOR HIGHWAY CONSTRUCTION.

IF A SEAL IS PRESENT ON THIS SHEET IT HAS BEEN ELECTRONICALLY SEALED AND DATED.

MISSOURI HIGHWAYS AND TRANSPORTATION COMMISSION
105 WEST CAPITOL
JEFFERSON CITY, MO 65102
1-888-ASK-MODOT (1-888-275-6636)

STATE OF MISSOURI
KATHRYN PHILLIPS HARVEY
NUMBER PE-23751
PROFESSIONAL ENGINEER
THIS SHEET HAS BEEN SIGNED, SEALED AND DATED ELECTRONICALLY.

TEMPORARY PAVEMENT MARKING

TEMPORARY PAVEMENT MARKING

DATE EFFECTIVE: 07/01/2011
DATE PREPARED: 10/18/2011

620.10C

SHEET NO. 1 OF 4

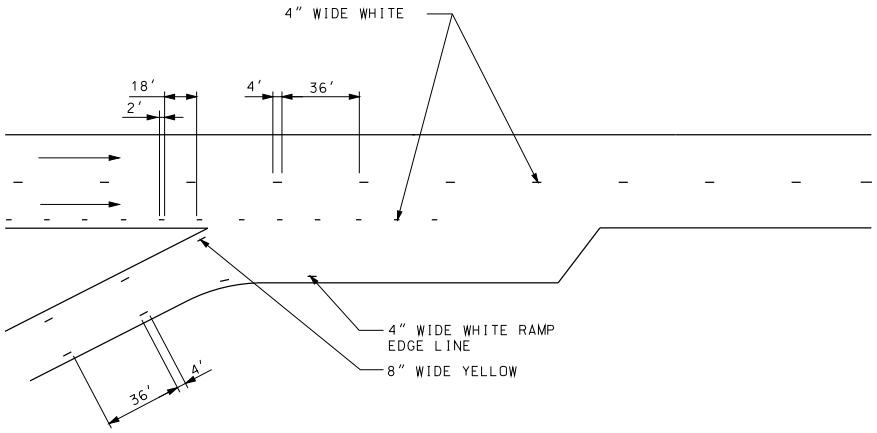

ENTRANCE RAMP

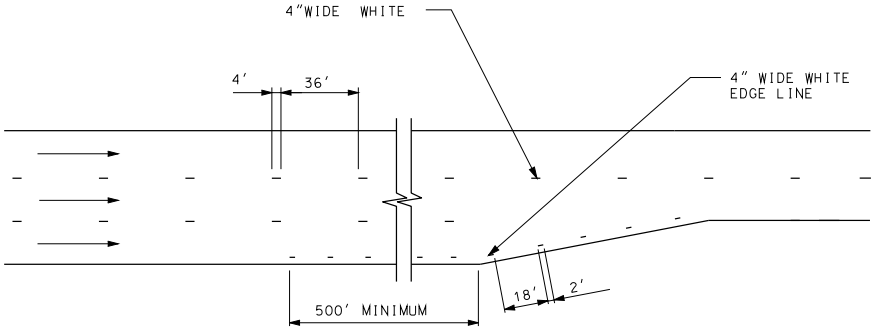

LANE TRANSITION

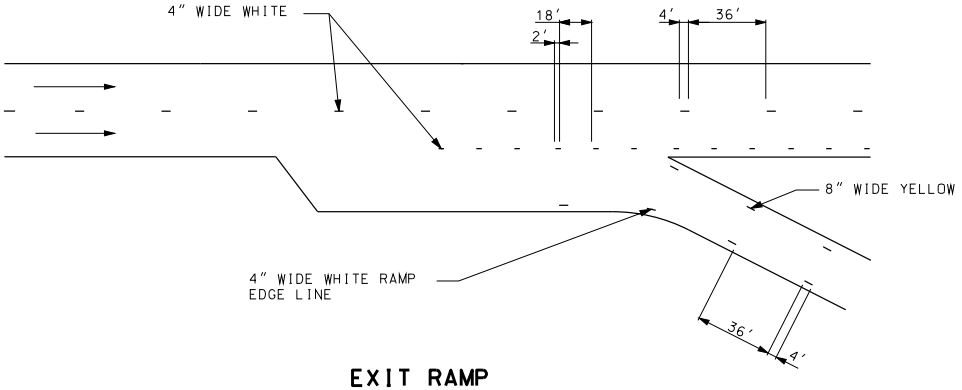

EXIT RAMP

GENERAL NOTES:

TEMPORARY PAVEMENT MARKING IN INTERSECTIONS, RAMPS GORES AND OTHER TRANSITION AREAS USE AN INTERMITTENT MARKING OF 2 FEET LONG AT A CYCLE OF 20 FEET.

LIMITS OF TEPORARY GORE MARKING ARE THE SAME AS THE EXISTING GORE LINES.

MISSOURI HIGHWAYS AND TRANSPORTATION COMMISSION
105 WEST CAPITOL
JEFFERSON CITY, MO 65102
1-888-ASK-MODOT (1-888-275-6636)

STATE OF MISSOURI
KATHRYN PHILLIPS HARVEY
NUMBER PE-23751
PROFESSIONAL ENGINEER
THIS SHEET HAS BEEN SIGNED, SEALED AND DATED ELECTRONICALLY.

TEMPORARY PAVEMENT MARKING

LANE TRANSITION AND RAMP AREAS

DATE EFFECTIVE: 07/01/2011
DATE PREPARED: 6/20/2011

620.10C

IF A SEAL IS PRESENT ON THIS SHEET IT HAS BEEN ELECTRONICALLY SEALED AND DATED.

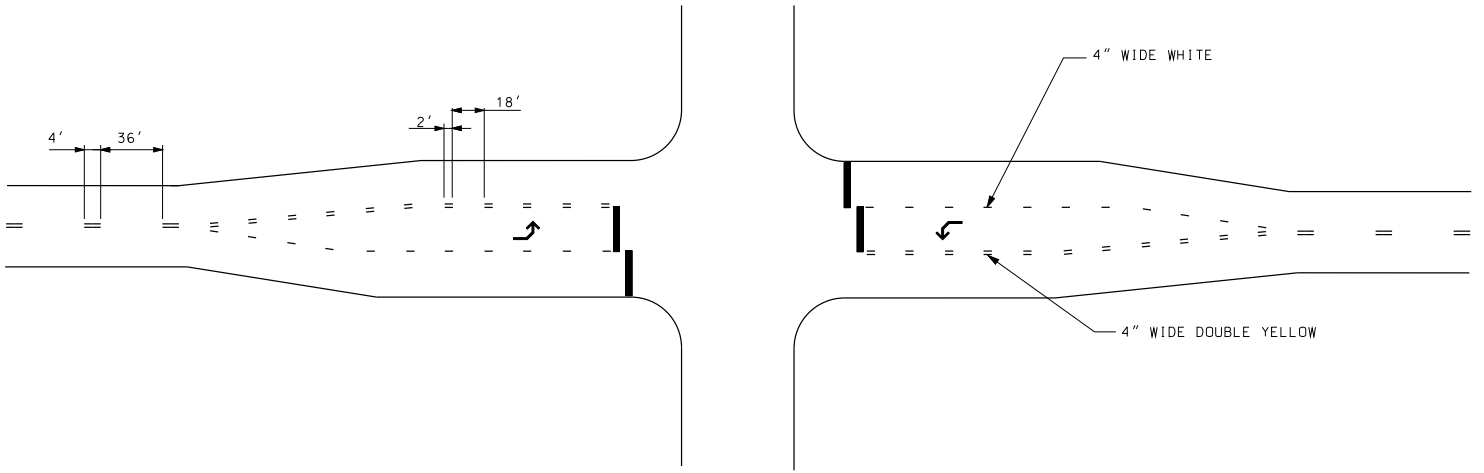

PLAN VIEW

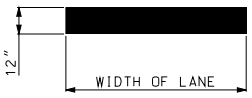

TEMPORARY STOP BAR DETAIL (WHITE)

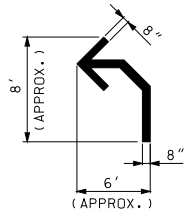

TEMPORARY ARROW DETAIL (WHITE)

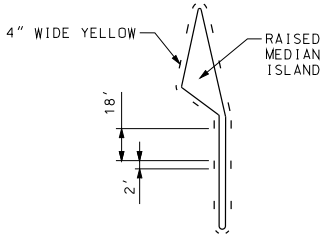

RAISED DIVISIONAL ISLAND

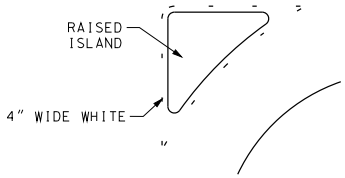

RAISED CHANNELIZING ISLAND

GENERAL NOTES:

TEMPORARY ARROWS AND STOP BARS ARE REQUIRED WHEN GOEMETRIC MODIFICATIONS DURING CONSTRUCTION CREATE LANE CONFIGURATIONS DIFFERENT THAN EXISTING, OR THE EXISTING PAVEMENT MARKING INCLUDES THEM.

YELLOW AND WHITE TEMPORARY MARKING AROUND ISLANDS ONLY REQUIRED WHEN THE ISLAND CURB IS NOT PAINTED.

TEMPORARY PAVEMENT MARKING IN INTERSECTIONS, RAMP GORES AND OTHER TRANSITION AREAS USE AN INTERMITTENT MARKING 2' LONG AT A CYCLE OF 20'.

MISSOURI HIGHWAYS AND TRANSPORTATION COMMISSION
105 WEST CAPITOL
JEFFERSON CITY, MO 65102
1-888-ASK-MODOT (1-888-275-6636)

STATE OF MISSOURI
KATHRYN PHILLIPS HARVEY
NUMBER PE-23751
PROFESSIONAL ENGINEER
THIS SHEET HAS BEEN SIGNED, SEALED AND DATED ELECTRONICALLY.

TEMPORARY PAVEMENT MARKING

INTERSECTIONS

DATE EFFECTIVE: 07/01/2011
DATE PREPARED: 6/20/2011

620.10C

SHEET NO. 3 OF 4

IF A SEAL IS PRESENT ON THIS SHEET IT HAS BEEN ELECTRONICALLY SEALED AND DATED.

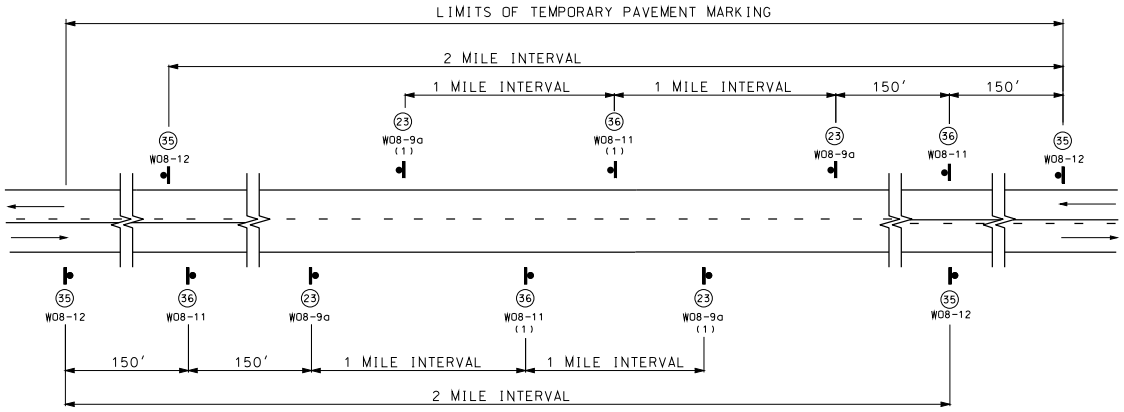

SIGN SPACING FOR MAINLINE

(DETAIL SHOWN IS BASED ON A PROJECT MEETING ALL CONDITIONS: NO CENTER STRIPE, UNEVEN LANES, SHOULDER DROP OFF AND BUMP.)
(1) IF ONLY ONE CONDITION EXISTS (UNEVEN LANES OR SHOULDER DROP OFF), THE SIGN SPACING SHALL BE AT 1 MILE INTERVALS.

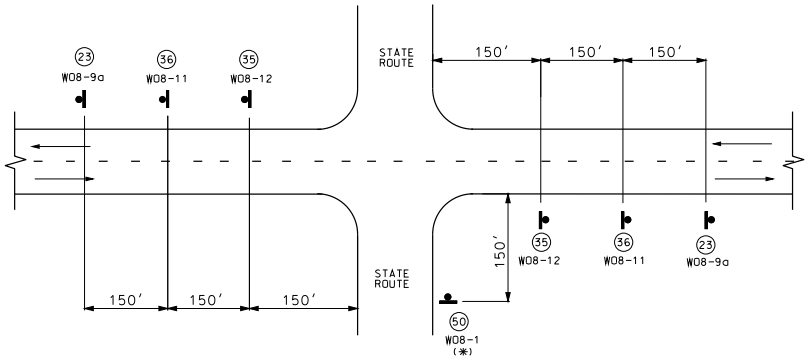

SIGN SPACING AT STATE ROUTE INTERSECTIONS

(*) BUMP SIGN SHOULD BE IN ACCORDANCE WITH STANDARD PLAN 619.10.

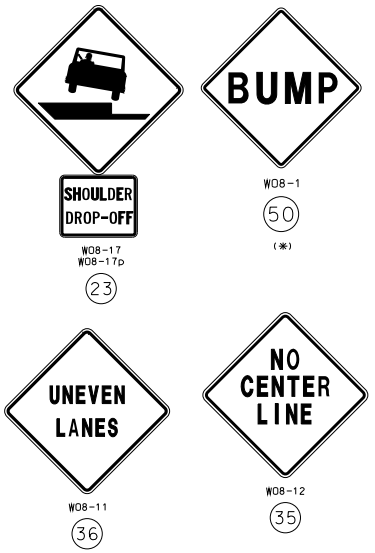

GENERAL NOTES:

FOR DETAILS OF TEMPORARY PAVEMENT MARKING SEE STANDARD PLAN 620.10.

SIGN (35) AND TEMPORARY PAVEMENT MARKING INSTALLED WHERE CENTERLINE STRIPING HAS BEEN COVERED OR REMOVED. SIGNS ARE TO REMAIN IN PLACE UNTIL THE PERMANENT CENTERLINE PAVEMENT MARKINGS ARE IN PLACE. SIGNS SHALL BE COVERED OR REMOVED WHEN PAVEMENT CENTERLINE MARKING HAS BEEN INSTALLED.

SIGN (35) IS PLACED AT APPROXIMATELY TWO-MILE INTERVALS AND AT STATE ROUTE JUNCTIONS. WHEN THE INSTALLATION AT A JUNCTION IS WITHIN ONE-EIGHTH MILE OF THE NORMAL MAINLINE SIGN (35), THE LATTER MAY BE ELIMINATED.

ALL SIGNS SHALL BE POST MOUNTED AND IN ACCORDANCE WITH STANDARD PLAN 616.10 AND 903.03.

WHEN SHOULDER DROP-OFF SIGNS ARE IN PLACE FOR GREATER THAN THREE DAYS, THE SHOULDER DROP-OFF PLAQUE SHOULD BE USED IN ADDITION WITH THE SHOULDER DROP-OFF SIGN.

MISSOURI HIGHWAYS AND TRANSPORTATION COMMISSION
105 WEST CAPITOL
JEFFERSON CITY, MO 65102
1-888-ASK-MODOT (1-888-275-6636)

STATE OF MISSOURI
KATHRYN PHILLIPS HARVEY
NUMBER PE-23751
PROFESSIONAL ENGINEER
THIS SHEET HAS BEEN SIGNED, SEALED AND DATED ELECTRONICALLY.

TEMPORARY PAVEMENT MARKING

TWO-LANE TWO-WAY HIGHWAY

DATE EFFECTIVE:	07/01/2011	620.10C	SHEET NO.
DATE PREPARED:	7/3/2013		4 OF 4

IF A SEAL IS PRESENT ON THIS SHEET IT HAS BEEN ELECTRONICALLY SEALED AND DATED.

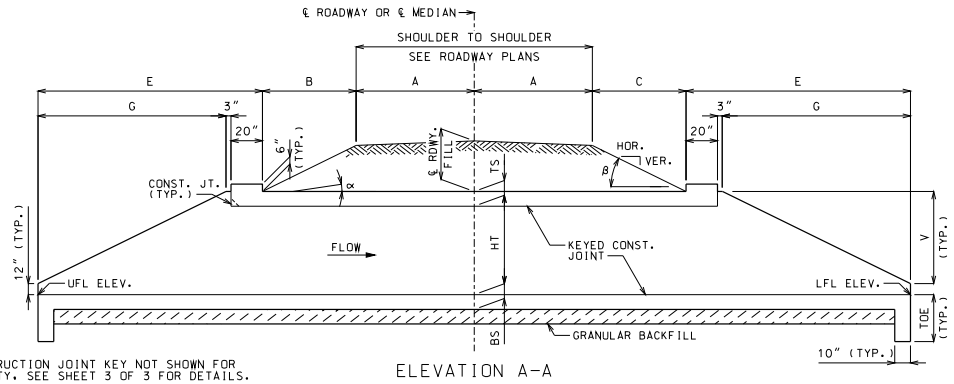

ELEVATION A-A

CONSTRUCTION JOINT KEY NOT SHOWN FOR CLARITY. SEE SHEET 3 OF 3 FOR DETAILS.

IF UNSUITABLE MATERIAL IS ENCOUNTERED, EXCAVATION OF UNSUITABLE MATERIAL AND FURNISHING AND PLACING OF GRANULAR BACKFILL SHALL BE IN ACCORDANCE WITH SECTION 206 OF THE STANDARD SPECIFICATIONS FOR HIGHWAY CONSTRUCTION.

EQUATIONS FOR COMPUTING α, β, B AND C

α = ANGLE OF BARREL SLOPE WITH HORIZONTAL NORMAL TO ℄ ROADWAY OR ℄ MEDIAN = $\arctan\left(\frac{\text{UFL ELEV.} - \text{LFL ELEV.}}{W}\right)$

β = ANGLE OF FILL SLOPE WITH HORIZONTAL NORMAL TO ℄ ROADWAY OR ℄ MEDIAN = $\arctan\left(\frac{\text{VER.}}{\text{HOR.}}\right)$

B = HORIZONTAL DISTANCE FROM UPSTREAM EDGE OF SHOULDER TO UPSTREAM HEADWALL NORMAL TO ℄ ROADWAY OR ℄ MEDIAN = $\frac{\text{℄ RDWY. FILL} + A(CS) - A(TAN\alpha)}{TAN\beta + TAN\alpha}$

C = HORIZONTAL DISTANCE FROM DOWNSTREAM EDGE OF SHOULDER TO DOWNSTREAM HEADWALL NORMAL TO ℄ ROADWAY OR ℄ MEDIAN = $\frac{\text{℄ RDWY. FILL} + A(CS) + A(TAN\alpha)}{TAN\beta - TAN\alpha}$

CS = CROSS SLOPE OF EACH PART OF ROADWAY INCLUDING CROWN, LANES AND SHOULDERS. CS IS POSITIVE IF RISING AND NEGATIVE IF FALLING AWAY FROM ℄ ROADWAY OR ℄ MEDIAN.

THE TERM "A(CS)" IS THE DIFFERENCE IN ELEVATION BETWEEN ℄ ROADWAY OR ℄ MEDIAN AND THE TOP OF THE FILL SLOPE NORMAL TO ℄ ROADWAY OR ℄ MEDIAN. THIS TERM SHALL BE ADJUSTED FOR UNSYMMETRICAL AND NONSTANDARD ROADWAYS.

TO ACCOUNT FOR A VARYING PROFILE GRADE THE ℄ ROADWAY FILL SHALL BE BASED ON STATIONS THAT CORRESPOND TO THE CORNERS OF THE INSIDE FACE OF THE HEADWALLS THAT PRODUCE MAXIMUM VALUES FOR B AND C.

SEE ROADWAY PLANS FOR FILL SLOPES, CROSS SLOPES, ℄ ROADWAY FILL, UPPER FLOW LINE (UFL) ELEVATION AND LOWER FLOW LINE (LFL) ELEVATION.

LAYOUT DIMENSIONS

VARIABLE	DIMENSION
α	SEE EQUATIONS
β	SEE EQUATIONS
B	SEE EQUATIONS
C	SEE EQUATIONS
E	G + 23"
F	S + 2TX
G	2V
V	HT + TS - 12"
W	2A + B + C + 2E
TOE	MAX{(BS + 12"), 40"}

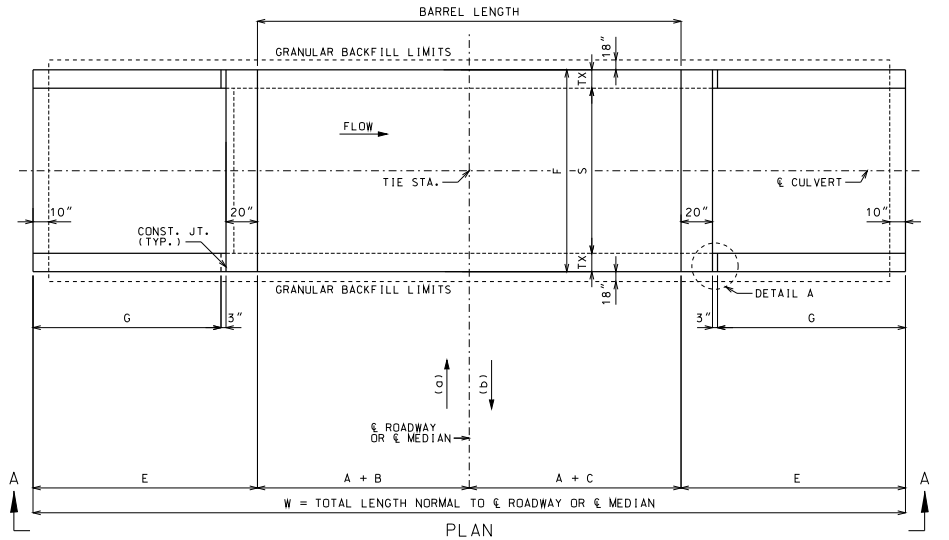

PLAN

(a) AHEAD STATION WHERE STREAM FLOWS LEFT TO RIGHT. (b) AHEAD STATION WHERE STREAM FLOWS RIGHT TO LEFT.

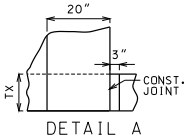

DETAIL A

GENERAL NOTES:

DESIGN SPECIFICATIONS: 2010 AASHTO LRFD BRIDGE DESIGN SPECFICATIONS AND 2010 INTERIM REVISIONS

DESIGN UNIT STRESSES: CLASS B-1 CONCRETE f'c = 4,000 PSI
REINFORCING STEEL (GRADE 60) fy = 60,000 PSI

DESIGN LOADS: VEHICULAR = HL-93 MINUS LANE LOAD
EARTH = 120 LB/FT³
EQUIVALENT FLUID PRESSURE = 30 LB/FT³ (MIN.) - 60 LB/FT³ (MAX.)

FOR REINFORCEMENT DETAILS, SEE SHEET 2 OF 3. FOR SECTION DETAILS, SEE SHEET 3 OF 3. FOR MEMBER THICKNESS, SEE 703.17.

DRAWING NOT TO SCALE. FOLLOW DIMENSIONS.

DIMENSIONS ARE IN INCHES UNLESS OTHERWISE NOTED.

WHEN ALTERNATE PRECAST CONCRETE BOX CULVERT SECTIONS ARE USED, THE MINIMUM DISTANCE FROM INSIDE FACE OF HEADWALLS TO PRECAST SECTIONS MEASURED ALONG THE SHORTEST WALL SHALL BE 3 FEET. REINFORCEMENT AND DIMENSIONS FOR WINGS AND HEADWALLS SHALL BE IN ACCORDANCE WITH MISSOURI STANDARD PLANS.

MISSOURI HIGHWAYS AND TRANSPORTATION COMMISSION
105 WEST CAPITOL
JEFFERSON CITY, MO 65102
1-888-ASK-MODOT (1-888-275-6636)

STATE OF MISSOURI
DENNIS W. HECKMAN
NUMBER PE-27141
PROFESSIONAL ENGINEER
THIS SHEET HAS BEEN SIGNED, SEALED AND DATED ELECTRONICALLY.

CONCRETE SINGLE BOX CULVERT

SKEW: SQUARE
WINGS: STRAIGHT

LAYOUT

DATE EFFECTIVE: 04/01/2011
DATE PREPARED: 9/8/2011

703.10H

SHEET NO. 1 OF 3

IF A SEAL IS PRESENT ON THIS SHEET IT HAS BEEN ELECTRONICALLY SEALED AND DATED.

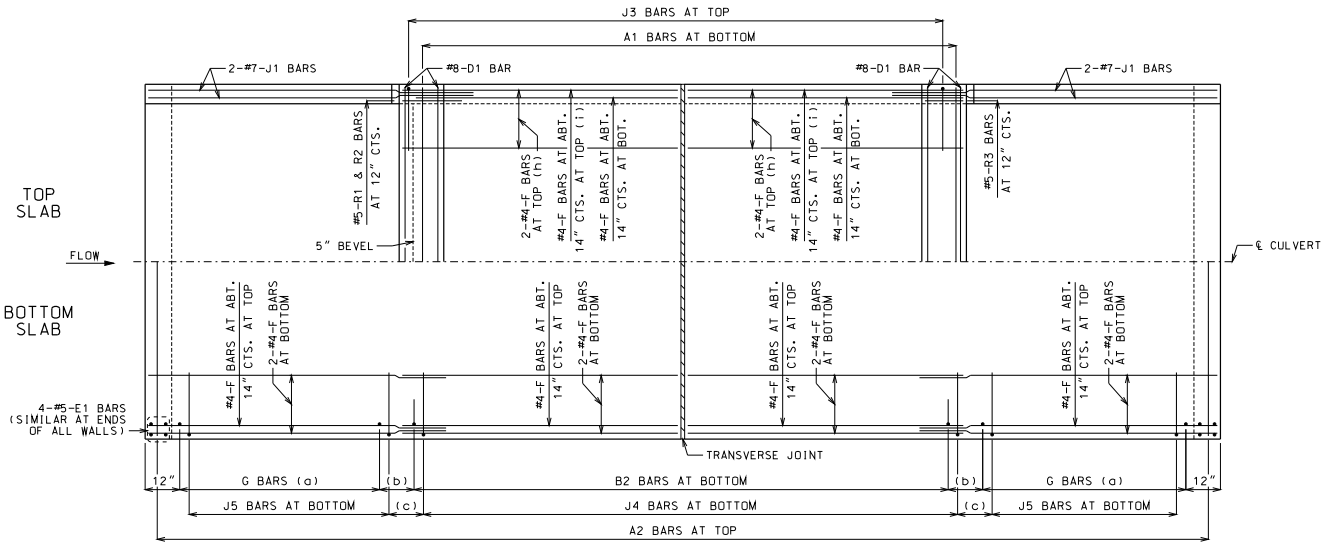

HALF PLANS

HALF PLANS ARE SYMMETRICAL ABOUT ℄ CULVERT.

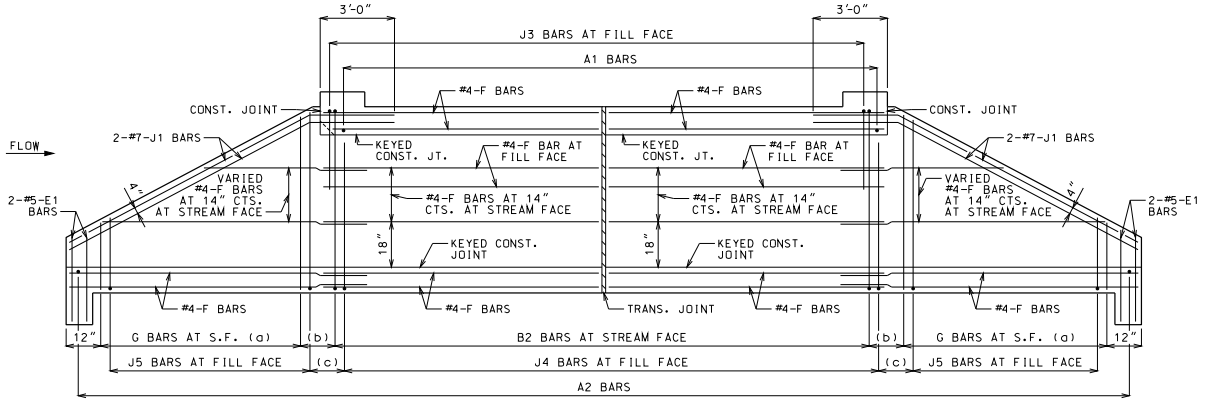

ELEVATION

J1 BARS MAY BE BENT IN FIELD OR SHOP.

LAYING OUT TRANVERSE JOINTS

UNLESS SHOWN ON ROADWAY OR BRIDGE PLANS

USE A TRANSVERSE JOINT WHEN BARREL LENGTH IS OVER 80 FEET. USE ADDITIONAL JOINTS TO LIMIT CUT SECTION LENGTH AND END SECTION BARREL LENGTH MEASURED ALONG CENTERLINE OF CULVERT TO 50 FEET.

MINIMUM END SECTION LENGTH SHALL BE 3 FEET MEASURED ALONG THE SHORTEST WALL FROM THE INSIDE FACE OF HEADWALL TO THE TRANSVERSE JOINT.

TO AVOID LOCATING TRANSVERSE JOINTS UNDER A TRAVELED WAY WITH DESIGN FILLS 2 FEET OR LESS THE FOLLOWING SHALL APPLY:

BARREL LENGTH UP TO 90 FEET WITHOUT A TRANSVERSE JOINT

CUT SECTION LENGTHS UP TO 60 FEET

WHEN BARREL AND CUT SECTION LENGTH RESTRICTIONS REQUIRE TRANSVERSE JOINTS TO BE LOCATED UNDER A TRAVELED WAY WITH DESIGN FILLS 2 FEET OR LESS, THE JOINTS SHALL BE LOCATED TO MINIMIZE THE LENGTH OF JOINT UNDER THE TRAVELED WAY.

TRAVELED WAY IS THE ROADWAY WIDTH MINUS SHOULDER WIDTHS.

FOR CUT SECTION DETAILS, SEE 703.16.

GENERAL NOTES:

FOR SECTIONS THRU BARREL, WINGS AND HEADWALLS, SEE SHEET 3 OF 3. FOR BAR SIZES, SPACING AND DIMENSIONS OF ALL REINFORCEMENT EXCEPT J5 BARS, SEE 703.17. FOR J5 BARS, SEE 703.37.

CONSTRUCTION JOINT KEY NOT SHOWN FOR CLARITY IN HALF PLANS AND ELEVATION. SEE SHEET 3 OF 3 FOR DETAILS.

DRAWING NOT TO SCALE. FOLLOW DIMENSIONS.

MINIMUM CLEARANCE TO REINFORCING STEEL SHALL BE 1½".

LAP LONGITUDINAL BARS A MINIMUM OF 23" AT SPLICES.

BEVELED HEADWALL SHALL BE LOCATED AT UPSTREAM END.

(a) SAME SIZE AND SPACING AS B2 BARS

(b) VARIES, 12" MAXIMUM

(c) J4 BAR SPACING

(d) NOT SPECIFIED ON THIS SHEET

(e) NOT SPECIFIED ON THIS SHEET

(f) NOT SPECIFIED ON THIS SHEET

(g) NOT SPECIFIED ON THIS SHEET

(h) FOR DESIGN FILLS OVER 2'-0"

(i) FOR DESIGN FILLS 2'-0" OR LESS

MISSOURI HIGHWAYS AND TRANSPORTATION COMMISSION
105 WEST CAPITOL
JEFFERSON CITY, MO 65102
1-888-ASK-MODOT (1-888-275-6636)

STATE OF MISSOURI
DENNIS W. HECKMAN
NUMBER PE-27141
PROFESSIONAL ENGINEER
THIS SHEET HAS BEEN SIGNED, SEALED AND DATED ELECTRONICALLY.

CONCRETE SINGLE BOX CULVERT

SKEW: SQUARE
WINGS: STRAIGHT

REINFORCEMENT

DATE EFFECTIVE: 04/01/2011
DATE PREPARED: 9/8/2011

703.10H

SHEET NO. 2 OF 3

IF A SEAL IS PRESENT ON THIS SHEET IT HAS BEEN ELECTRONICALLY SEALED AND DATED.

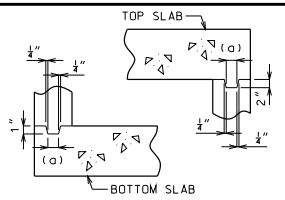

KEYED CONSTRUCTION JOINT

(a) APPROXIMATELY ONE-THIRD OF WALL THICKNESS

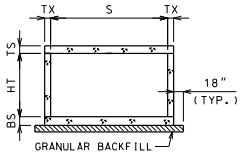

GRANULAR BACKFILL LIMITS AND MEMBER DIMENSIONS

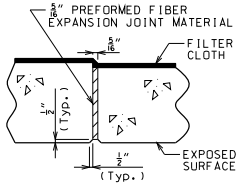

TRANSVERSE JOINT THRU BARREL

PREFORMED FIBER EXPANSION JOINT MATERIAL SHALL BE SECURELY STITCHED TO ONE FACE OF THE CONCRETE WITH NO. 10 GAGE COPPER WIRE OR NO. 12 GAGE SOFT DRAWN GALVANIZED STEEL WIRE.

FILTER CLOTH 3 FEET IN WIDTH AND DOUBLE THICKNESS SHALL BE CENTERED ON TRANSVERSE JOINTS IN TOP SLAB AND SIDEWALLS WITH EDGES SEALED WITH MASTIC OR TWO SIDED TAPE. FILTER CLOTH SHALL BE A SUBSURFACE DRAINAGE GEOTEXTILE IN ACCORDANCE WITH SECTION 1011 OF THE STANDARD SPECIFICATIONS FOR HIGHWAY CONSTRUCTION. COST OF FURNISHING AND INSTALLING FILTER CLOTH WILL BE CONSIDERED COMPLETELY COVERED BY THE CONTRACT UNIT PRICE FOR OTHER ITEMS.

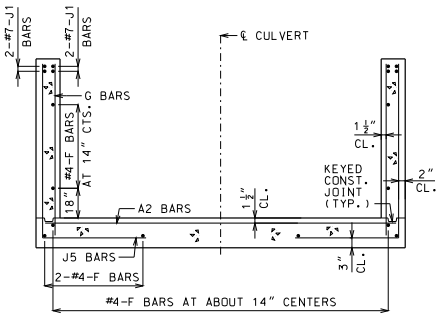

UPSTREAM AND DOWNSTREAM WINGS REINFORCEMENT

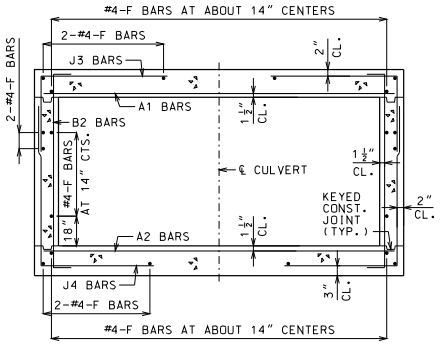

BARREL REINFORCEMENT

FOR DESIGN FILLS OVER 2'-0"

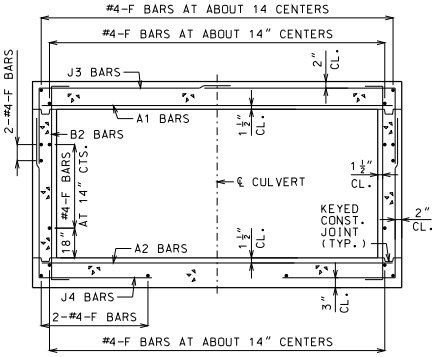

BARREL REINFORCEMENT

FOR DESIGN FILLS 2'-0" OR LESS

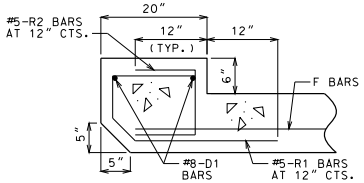

UPSTREAM HEADWALL REINFORCEMENT

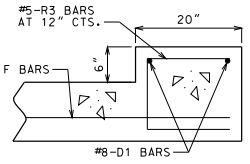

DOWNSTREAM HEADWALL REINFORCEMENT

GENERAL NOTES:

FOR MEMBER THICKNESS AND FOR BAR SIZES, SPACING AND DIMENSIONS OF ALL REINFORCEMENT EXCEPT J5 BARS, SEE 703.17. FOR J5 BARS, SEE 703.37.

BARREL AND WINGS SECTIONS ARE SYMMETRICAL ABOUT AND NORMAL TO ℄ CULVERT. HEADWALL SECTIONS ARE NORMAL TO LONG DIRECTION OF HEADWALL.

DRAWING NOT TO SCALE. FOLLOW DIMENSIONS.

MINIMUM CLEARANCE TO REINFORCING STEEL SHALL BE 1½".

MISSOURI HIGHWAYS AND TRANSPORTATION COMMISSION
105 WEST CAPITOL
JEFFERSON CITY, MO 65102
1-888-ASK-MODOT (1-888-275-6636)

STATE OF MISSOURI
DENNIS W. HECKMAN
NUMBER PE-27141
PROFESSIONAL ENGINEER
THIS SHEET HAS BEEN SIGNED, SEALED AND DATED ELECTRONICALLY.

CONCRETE SINGLE BOX CULVERT

SKEW: SQUARE
WINGS: STRAIGHT

SECTIONS

DATE EFFECTIVE: 04/01/2011
DATE PREPARED: 9/8/2011

703.10H

SHEET NO. 3 OF 3

IF A SEAL IS PRESENT ON THIS SHEET IT HAS BEEN ELECTRONICALLY SEALED AND DATED.

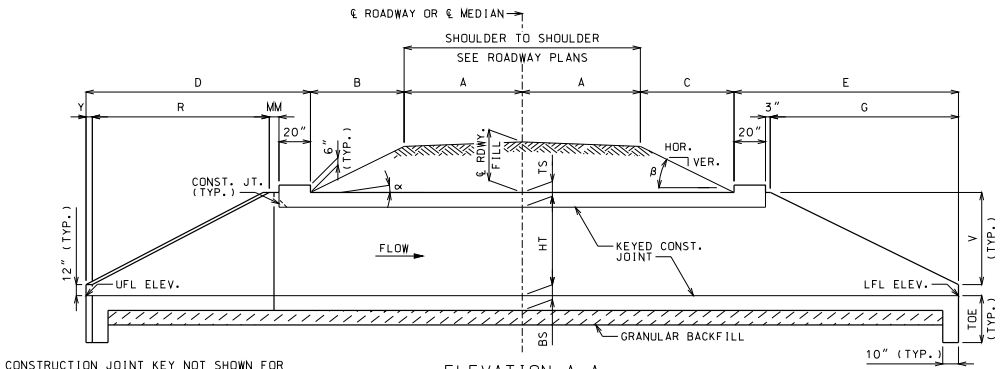

ELEVATION A-A

CONSTRUCTION JOINT KEY NOT SHOWN FOR CLARITY. SEE SHEET 3 OF 3 FOR DETAILS.

IF UNSUITABLE MATERIAL IS ENCOUNTERED, EXCAVATION OF UNSUITABLE MATERIAL AND FURNISHING AND PLACING OF GRANULAR BACKFILL SHALL BE IN ACCORDANCE WITH SECTION 206 OF THE STANDARD SPECIFICATIONS FOR HIGHWAY CONSTRUCTION.

EQUATIONS FOR COMPUTING α, β, B AND C

α = ANGLE OF BARREL SLOPE WITH HORIZONTAL NORMAL TO ℄ ROADWAY OR ℄ MEDIAN = $\arctan\left(\frac{\text{UFL ELEV.} - \text{LFL ELEV.}}{W}\right)$

β = ANGLE OF FILL SLOPE WITH HORIZONTAL NORMAL TO ℄ ROADWAY OR ℄ MEDIAN = $\arctan\left(\frac{\text{VER.}}{\text{HOR.}}\right)$

B = HORIZONTAL DISTANCE FROM UPSTREAM EDGE OF SHOULDER TO UPSTREAM HEADWALL NORMAL TO ℄ ROADWAY OR ℄ MEDIAN = $\frac{\text{℄ RDWY. FILL} + A(CS) - A(TAN\alpha)}{TAN\beta + TAN\alpha}$

C = HORIZONTAL DISTANCE FROM DOWNSTREAM EDGE OF SHOULDER TO DOWNSTREAM HEADWALL NORMAL TO ℄ ROADWAY OR ℄ MEDIAN = $\frac{\text{℄ RDWY. FILL} + A(CS) + A(TAN\alpha)}{TAN\beta - TAN\alpha}$

CS = CROSS SLOPE OF EACH PART OF ROADWAY INCLUDING CROWN, LANES AND SHOULDERS. CS IS POSITIVE IF RISING AND NEGATIVE IF FALLING AWAY FROM ℄ ROADWAY OR ℄ MEDIAN.

THE TERM "A(CS)" IS THE DIFFERENCE IN ELEVATION BETWEEN ℄ ROADWAY OR ℄ MEDIAN AND THE TOP OF THE FILL SLOPE NORMAL TO ℄ ROADWAY OR ℄ MEDIAN. THIS TERM SHALL BE ADJUSTED FOR UNSYMMETRICAL AND NONSTANDARD ROADWAYS.

TO ACCOUNT FOR A VARYING PROFILE GRADE THE ℄ ROADWAY FILL SHALL BE BASED ON STATIONS THAT CORRESPOND TO THE CORNERS OF THE INSIDE FACE OF THE HEADWALLS THAT PRODUCE MAXIMUM VALUES FOR B AND C.

SEE ROADWAY PLANS FOR FILL SLOPES, CROSS SLOPES, ℄ ROADWAY FILL, UPPER FLOW LINE (UFL) ELEVATION AND LOWER FLOW LINE (LFL) ELEVATION.

LAYOUT DIMENSIONS

VARIABLE	DIMENSION	VARIABLE	DIMENSION
α	SEE EQUATIONS	P	2V(SEC 20°)
β	SEE EQUATIONS	Q	TX(COS 20°)
B	SEE EQUATIONS	R	P(COS 20°)
C	SEE EQUATIONS	U	(R + M)(TAN 20°)
D	Y + R + MM + 20"	V	HT + TS - 12"
E	G + 23"	W	2A + B + C + D + E
F	S + 2TX	Y	TX(SIN 20°)
G	2V	KK	S/2 + U
M	N(COS 20°)	MM	3" + 3"(COS 20°)
N	3" + TX(TAN 10°)	TOE	MAX{(BS + 12"), 40"}

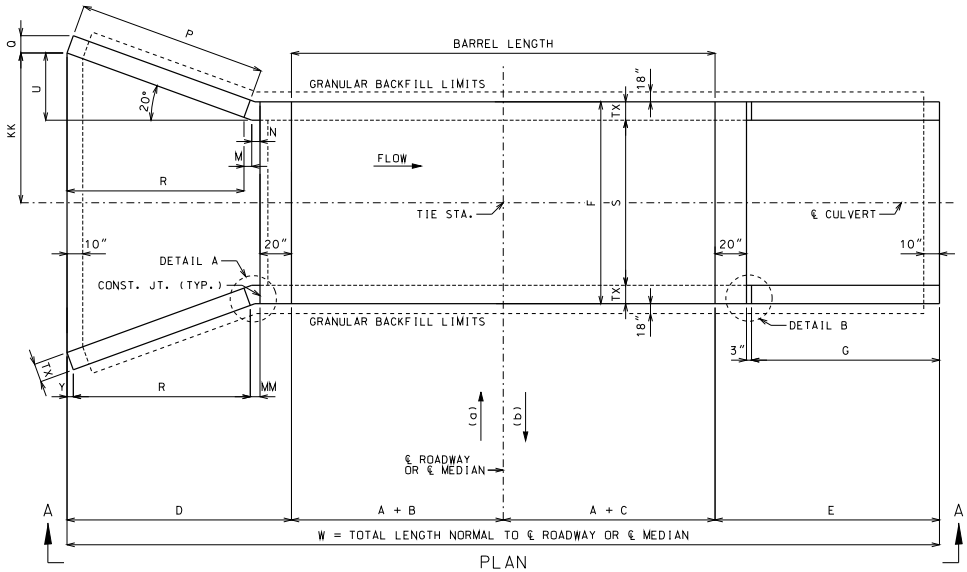

PLAN

(a) AHEAD STATION WHERE STREAM FLOWS LEFT TO RIGHT. (b) AHEAD STATION WHERE STREAM FLOWS RIGHT TO LEFT.

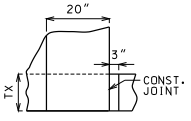

DETAIL B

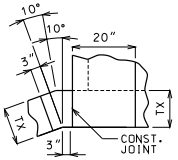

DETAIL A

GENERAL NOTES:

DESIGN SPECIFICATIONS: 2010 AASHTO LRFD BRIDGE DESIGN SPECFICATIONS AND 2010 INTERIM REVISIONS

DESIGN UNIT STRESSES: CLASS B-1 CONCRETE f'c = 4,000 PSI
REINFORCING STEEL (GRADE 60) fy = 60,000 PSI

DESIGN LOADS: VEHICULAR = HL-93 MINUS LANE LOAD
EARTH = 120 LB/FT³
EQUIVALENT FLUID PRESSURE = 30 LB/FT³ (MIN.) - 60 LB/FT³ (MAX.)

FOR REINFORCEMENT DETAILS, SEE SHEET 2 OF 3. FOR SECTION DETAILS, SEE SHEET 3 OF 3. FOR MEMBER THICKNESS, SEE 703.17.

DRAWING NOT TO SCALE. FOLLOW DIMENSIONS.

DIMENSIONS ARE IN INCHES UNLESS OTHERWISE NOTED.

WHEN ALTERNATE PRECAST CONCRETE BOX CULVERT SECTIONS ARE USED, THE MINIMUM DISTANCE FROM INSIDE FACE OF HEADWALLS TO PRECAST SECTIONS MEASURED ALONG THE SHORTEST WALL SHALL BE 3 FEET. REINFORCEMENT AND DIMENSIONS FOR WINGS AND HEADWALLS SHALL BE IN ACCORDANCE WITH MISSOURI STANDARD PLANS.

MISSOURI HIGHWAYS AND TRANSPORTATION COMMISSION
105 WEST CAPITOL
JEFFERSON CITY, MO 65102
1-888-ASK-MODOT (1-888-275-6636)

STATE OF MISSOURI
DENNIS W. HECKMAN
NUMBER PE-27141
PROFESSIONAL ENGINEER
THIS SHEET HAS BEEN SIGNED, SEALED AND DATED ELECTRONICALLY.

CONCRETE SINGLE BOX CULVERT

SKEW: SQUARE
WINGS: FLARED

LAYOUT

DATE EFFECTIVE: 04/01/2011
DATE PREPARED: 9/8/2011

703.11H

SHEET NO. 1 OF 3

IF A SEAL IS PRESENT ON THIS SHEET IT HAS BEEN ELECTRONICALLY SEALED AND DATED.

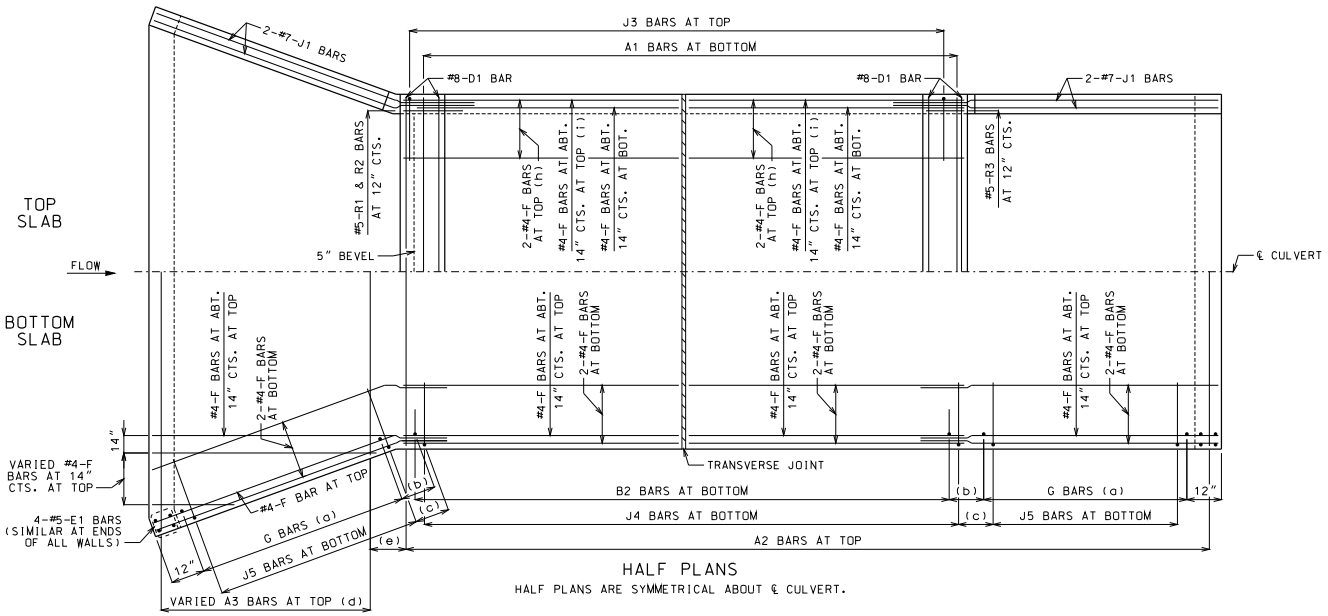

HALF PLANS

HALF PLANS ARE SYMMETRICAL ABOUT ℄ CULVERT.

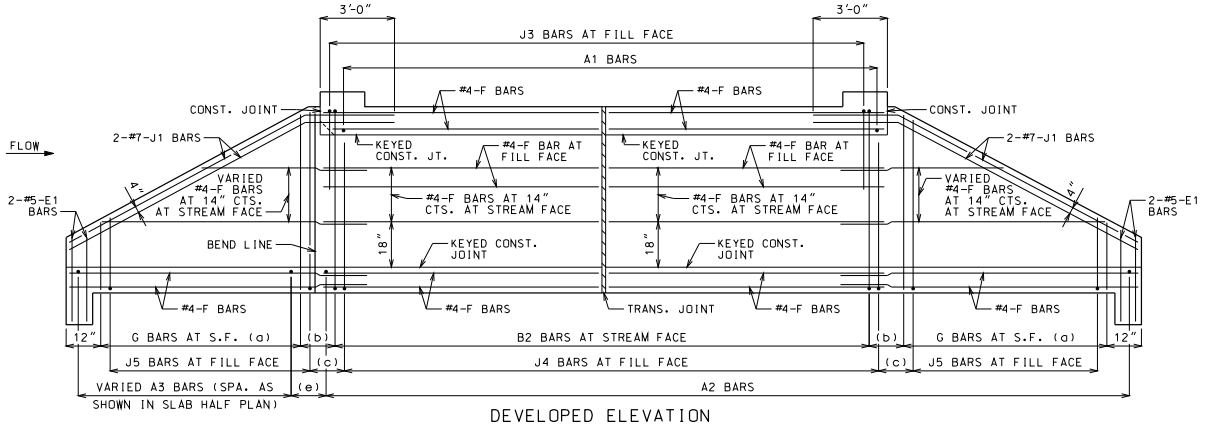

DEVELOPED ELEVATION

J1 BARS MAY BE BENT IN FIELD OR SHOP.

LAYING OUT TRANVERSE JOINTS

UNLESS SHOWN ON ROADWAY OR BRIDGE PLANS

USE A TRANSVERSE JOINT WHEN BARREL LENGTH IS OVER 80 FEET. USE ADDITIONAL JOINTS TO LIMIT CUT SECTION LENGTH AND END SECTION BARREL LENGTH MEASURED ALONG CENTERLINE OF CULVERT TO 50 FEET.

MINIMUM END SECTION LENGTH SHALL BE 3 FEET MEASURED ALONG THE SHORTEST WALL FROM THE INSIDE FACE OF HEADWALL TO THE TRANSVERSE JOINT.

TO AVOID LOCATING TRANSVERSE JOINTS UNDER A TRAVELED WAY WITH DESIGN FILLS 2 FEET OR LESS THE FOLLOWING SHALL APPLY:

BARREL LENGTH UP TO 90 FEET WITHOUT A TRANSVERSE JOINT

CUT SECTION LENGTHS UP TO 60 FEET

WHEN BARREL AND CUT SECTION LENGTH RESTRICTIONS REQUIRE TRANSVERSE JOINTS TO BE LOCATED UNDER A TRAVELED WAY WITH DESIGN FILLS 2 FEET OR LESS, THE JOINTS SHALL BE LOCATED TO MINIMIZE THE LENGTH OF JOINT UNDER THE TRAVELED WAY.

TRAVELED WAY IS THE ROADWAY WIDTH MINUS SHOULDER WIDTHS.

FOR CUT SECTION DETAILS, SEE 703.16.

GENERAL NOTES:

FOR SECTIONS THRU BARREL, WINGS AND HEADWALLS, SEE SHEET 3 OF 3. FOR BAR SIZES, SPACING AND DIMENSIONS OF ALL REINFORCEMENT EXCEPT J5 BARS, SEE 703.17. FOR J5 BARS, SEE 703.37.

CONSTRUCTION JOINT KEY NOT SHOWN FOR CLARITY IN HALF PLANS AND ELEVATION. SEE SHEET 3 OF 3 FOR DETAILS.

DRAWING NOT TO SCALE. FOLLOW DIMENSIONS.

MINIMUM CLEARANCE TO REINFORCING STEEL SHALL BE 1½".

LAP LONGITUDINAL BARS A MINIMUM OF 23" AT SPLICES.

BEVELED HEADWALL SHALL BE LOCATED AT UPSTREAM END.

(a) SAME SIZE AND SPACING AS B2 BARS

(b) VARIES, 12" MAXIMUM

(c) J4 BAR SPACING

(d) SAME SIZE AND SPACING AS B2 BARS

(e) A2 BAR SPACING

(f) NOT SPECIFIED ON THIS SHEET

(g) NOT SPECIFIED ON THIS SHEET

(h) FOR DESIGN FILLS OVER 2'-0"

(i) FOR DESIGN FILLS 2'-0" OR LESS

MISSOURI HIGHWAYS AND TRANSPORTATION COMMISSION
105 WEST CAPITOL
JEFFERSON CITY, MO 65102
1-888-ASK-MODOT (1-888-275-6636)

STATE OF MISSOURI
DENNIS W. HECKMAN
NUMBER PE-27141
PROFESSIONAL ENGINEER
THIS SHEET HAS BEEN SIGNED, SEALED AND DATED ELECTRONICALLY.

CONCRETE SINGLE BOX CULVERT

SKEW: SQUARE
WINGS: FLARED

REINFORCEMENT

DATE EFFECTIVE: 04/01/2011
DATE PREPARED: 9/8/2011

703.11H

SHEET NO. 2 OF 3

IF A SEAL IS PRESENT ON THIS SHEET IT HAS BEEN ELECTRONICALLY SEALED AND DATED.

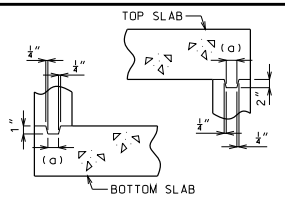

KEYED CONSTRUCTION JOINT

(a) APPROXIMATELY ONE-THIRD OF WALL THICKNESS

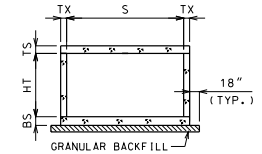

GRANULAR BACKFILL LIMITS AND MEMBER DIMENSIONS

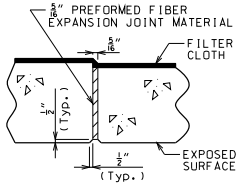

TRANSVERSE JOINT THRU BARREL

PREFORMED FIBER EXPANSION JOINT MATERIAL SHALL BE SECURELY STITCHED TO ONE FACE OF THE CONCRETE WITH NO. 10 GAGE COPPER WIRE OR NO. 12 GAGE SOFT DRAWN GALVANIZED STEEL WIRE.

FILTER CLOTH 3 FEET IN WIDTH AND DOUBLE THICKNESS SHALL BE CENTERED ON TRANSVERSE JOINTS IN TOP SLAB AND SIDEWALLS WITH EDGES SEALED WITH MASTIC OR TWO SIDED TAPE. FILTER CLOTH SHALL BE A SUBSURFACE DRAINAGE GEOTEXTILE IN ACCORDANCE WITH SECTION 1011 OF THE STANDARD SPECIFICATIONS FOR HIGHWAY CONSTRUCTION. COST OF FURNISHING AND INSTALLING FILTER CLOTH WILL BE CONSIDERED COMPLETELY COVERED BY THE CONTRACT UNIT PRICE FOR OTHER ITEMS.

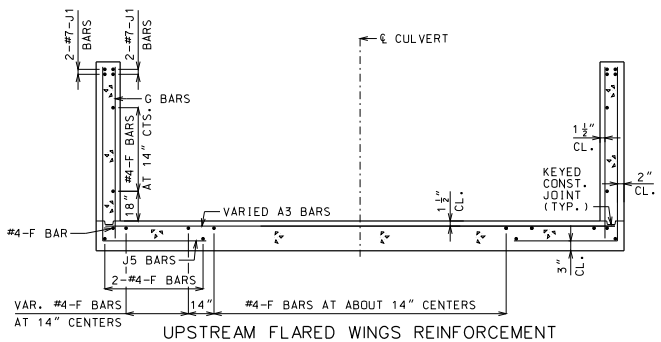

UPSTREAM FLARED WINGS REINFORCEMENT

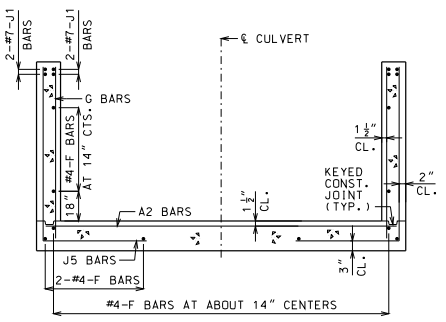

DOWNSTREAM WINGS REINFORCEMENT

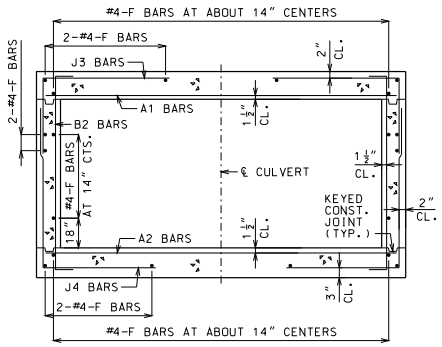

BARREL REINFORCEMENT

FOR DESIGN FILLS OVER 2'-0"

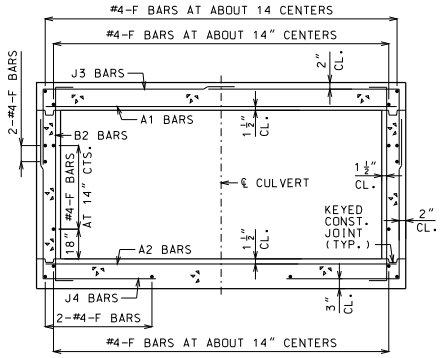

BARREL REINFORCEMENT

FOR DESIGN FILLS 2'-0" OR LESS

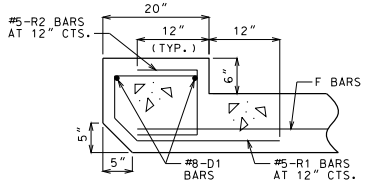

UPSTREAM HEADWALL REINFORCEMENT

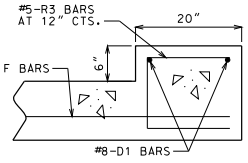

DOWNSTREAM HEADWALL REINFORCEMENT

GENERAL NOTES:

FOR MEMBER THICKNESS AND FOR BAR SIZES, SPACING AND DIMENSIONS OF ALL REINFORCEMENT EXCEPT J5 BARS, SEE 703.17. FOR J5 BARS, SEE 703.37.

BARREL AND WINGS SECTIONS ARE SYMMETRICAL ABOUT AND NORMAL TO ℄ CULVERT. HEADWALL SECTIONS ARE NORMAL TO LONG DIRECTION OF HEADWALL.

DRAWING NOT TO SCALE. FOLLOW DIMENSIONS.

MINIMUM CLEARANCE TO REINFORCING STEEL SHALL BE 1½".

MISSOURI HIGHWAYS AND TRANSPORTATION COMMISSION
105 WEST CAPITOL
JEFFERSON CITY, MO 65102
1-888-ASK-MODOT (1-888-275-6636)

STATE OF MISSOURI
DENNIS W. HECKMAN
NUMBER PE-27141
PROFESSIONAL ENGINEER
THIS SHEET HAS BEEN SIGNED, SEALED AND DATED ELECTRONICALLY.

CONCRETE SINGLE BOX CULVERT

SKEW: SQUARE
WINGS: FLARED

SECTIONS

DATE EFFECTIVE: 04/01/2011
DATE PREPARED: 9/8/2011

703.11H

SHEET NO. 3 OF 3

IF A SEAL IS PRESENT ON THIS SHEET IT HAS BEEN ELECTRONICALLY SEALED AND DATED.

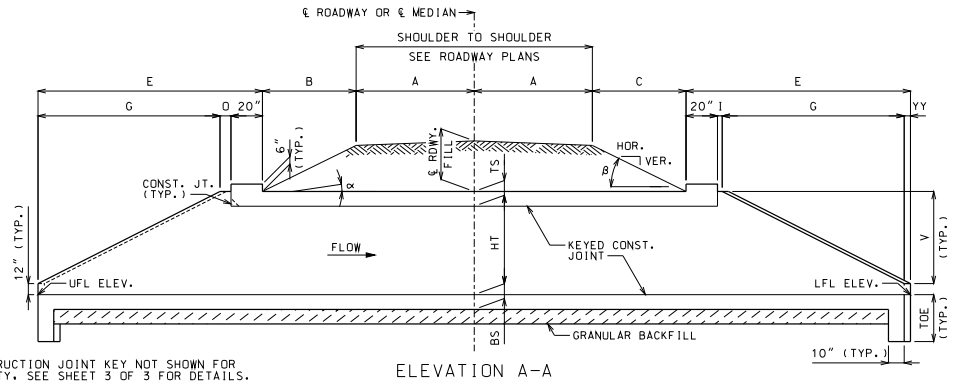

ELEVATION A-A

CONSTRUCTION JOINT KEY NOT SHOWN FOR CLARITY. SEE SHEET 3 OF 3 FOR DETAILS.

IF UNSUITABLE MATERIAL IS ENCOUNTERED, EXCAVATION OF UNSUITABLE MATERIAL AND FURNISHING AND PLACING OF GRANULAR BACKFILL SHALL BE IN ACCORDANCE WITH SECTION 206 OF THE STANDARD SPECIFICATIONS FOR HIGHWAY CONSTRUCTION.

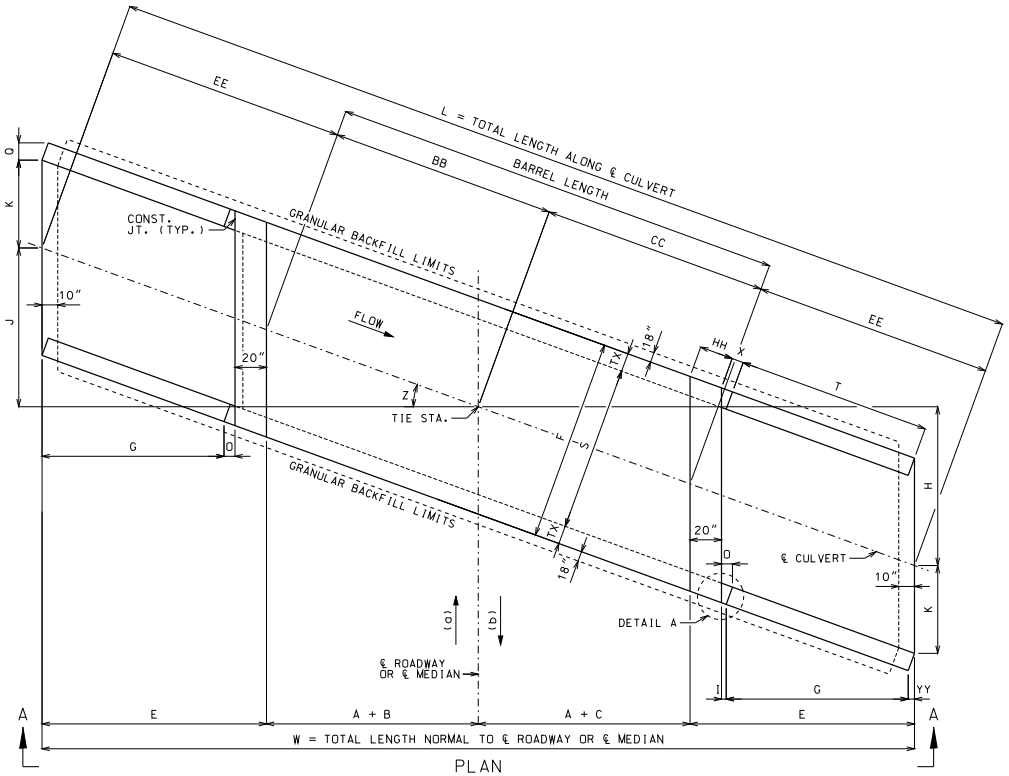

PLAN

(a) AHEAD STATION WHERE STREAM FLOWS LEFT TO RIGHT. (b) AHEAD STATION WHERE STREAM FLOWS RIGHT TO LEFT.

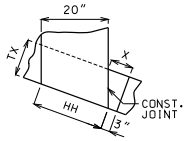

DETAIL A

EQUATIONS FOR COMPUTING ∝, β, B AND C

∝ = ANGLE OF BARREL SLOPE WITH HORIZONTAL NORMAL TO ℄ ROADWAY OR ℄ MEDIAN = $\arctan\left(\frac{\text{UFL ELEV.} - \text{LFL ELEV.}}{W}\right)$

β = ANGLE OF FILL SLOPE WITH HORIZONTAL NORMAL TO ℄ ROADWAY OR ℄ MEDIAN = $\arctan\left(\frac{\text{VER.}}{\text{HOR.}}\right)$

B = HORIZONTAL DISTANCE FROM UPSTREAM EDGE OF SHOULDER TO UPSTREAM HEADWALL NORMAL TO ℄ ROADWAY OR ℄ MEDIAN = $\frac{\text{℄ RDWY. FILL} + A(CS) - A(\tan\alpha)}{\tan\beta + \tan\alpha}$

C = HORIZONTAL DISTANCE FROM DOWNSTREAM EDGE OF SHOULDER TO DOWNSTREAM HEADWALL NORMAL TO ℄ ROADWAY OR ℄ MEDIAN = $\frac{\text{℄ RDWY. FILL} + A(CS) + A(\tan\alpha)}{\tan\beta - \tan\alpha}$

CS = CROSS SLOPE OF EACH PART OF ROADWAY INCLUDING CROWN, LANES AND SHOULDERS. CS IS POSITIVE IF RISING AND NEGATIVE IF FALLING AWAY FROM ℄ ROADWAY OR ℄ MEDIAN.

THE TERM "A(CS)" IS THE DIFFERENCE IN ELEVATION BETWEEN ℄ ROADWAY OR ℄ MEDIAN AND THE TOP OF THE FILL SLOPE NORMAL TO ℄ ROADWAY OR ℄ MEDIAN. THIS TERM SHALL BE ADJUSTED FOR UNSYMMETRICAL AND NONSTANDARD ROADWAYS.

TO ACCOUNT FOR A VARYING PROFILE GRADE THE ℄ ROADWAY FILL SHALL BE BASED ON STATIONS THAT CORRESPOND TO THE CORNERS OF THE INSIDE FACE OF THE HEADWALLS THAT PRODUCE MAXIMUM VALUES FOR B AND C.

SEE ROADWAY PLANS FOR FILL SLOPES, CROSS SLOPES, ℄ ROADWAY FILL, UPPER FLOW LINE (UFL) ELEVATION AND LOWER FLOW LINE (LFL) ELEVATION.

LAYOUT DIMENSIONS

VARIABLE	DIMENSION
∝	SEE EQUATIONS
β	SEE EQUATIONS
B	SEE EQUATIONS
C	SEE EQUATIONS
E	G + O + 20"
F	S + 2TX
G	2V
H	(A + C + E)(TAN Z)
I	3"(COS Z)
J	(A + B + E)(TAN Z)
K	(S/2)(SEC Z)
L	2EE + BB + CC
O	I + YY

VARIABLE	DIMENSION
O	TX(COS Z)
T	G(SEC Z)
V	HT + TS - 12"
W	2A + B + C + 2E
X	3" + TX(TAN Z)
Z	SKEW ANGLE
BB	(A + B)(SEC Z)
CC	(A + C)(SEC Z)
EE	E(SEC Z)
HH	20"(SEC Z)
YY	TX(SIN Z)
TOE	MAX{(BS + 12"), 40"}

GENERAL NOTES:

DESIGN SPECIFICATIONS: 2010 AASHTO LRFD BRIDGE DESIGN SPECFICATIONS AND 2010 INTERIM REVISIONS

DESIGN UNIT STRESSES: CLASS B-1 CONCRETE f'c = 4,000 PSI
REINFORCING STEEL (GRADE 60) fy = 60,000 PSI

DESIGN LOADS: VEHICULAR = HL-93 MINUS LANE LOAD
EARTH = 120 LB/FT³
EQUIVALENT FLUID PRESSURE = 30 LB/FT³ (MIN.) - 60 LB/FT³ (MAX.)

FOR REINFORCEMENT DETAILS, SEE SHEET 2 OF 3. FOR SECTION DETAILS, SEE SHEET 3 OF 3. FOR MEMBER THICKNESS, SEE 703.17.

DRAWING NOT TO SCALE. FOLLOW DIMENSIONS.

DIMENSIONS ARE IN INCHES UNLESS OTHERWISE NOTED.

WHEN ALTERNATE PRECAST CONCRETE BOX CULVERT SECTIONS ARE USED, THE MINIMUM DISTANCE FROM INSIDE FACE OF HEADWALLS TO PRECAST SECTIONS MEASURED ALONG THE SHORTEST WALL SHALL BE 3 FEET. REINFORCEMENT AND DIMENSIONS FOR WINGS AND HEADWALLS SHALL BE IN ACCORDANCE WITH MISSOURI STANDARD PLANS.

MISSOURI HIGHWAYS AND TRANSPORTATION COMMISSION
105 WEST CAPITOL
JEFFERSON CITY, MO 65102
1-888-ASK-MODOT (1-888-275-6636)

STATE OF MISSOURI
DENNIS W. HECKMAN
NUMBER PE-27141
PROFESSIONAL ENGINEER
THIS SHEET WAS SIGNED, SEALED AND DATED ELECTRONICALLY.

CONCRETE SINGLE BOX CULVERT

SKEW: LEFT ADVANCE
WINGS: STRAIGHT

LAYOUT

DATE EFFECTIVE: 04/01/2011
DATE PREPARED: 9/8/2011

703.12H

SHEET NO. 1 OF 3

IF A SEAL IS PRESENT ON THIS SHEET IT HAS BEEN ELECTRONICALLY SEALED AND DATED.

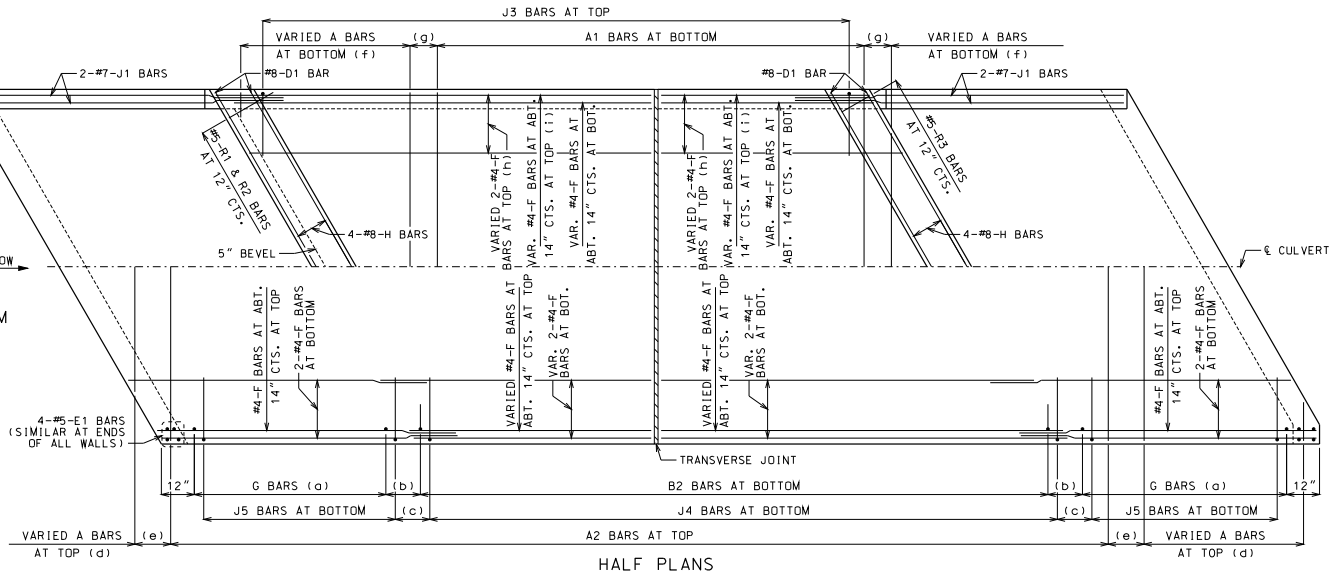

HALF PLANS

HALF PLANS ARE SYMMETRICAL ABOUT ℄ CULVERT.

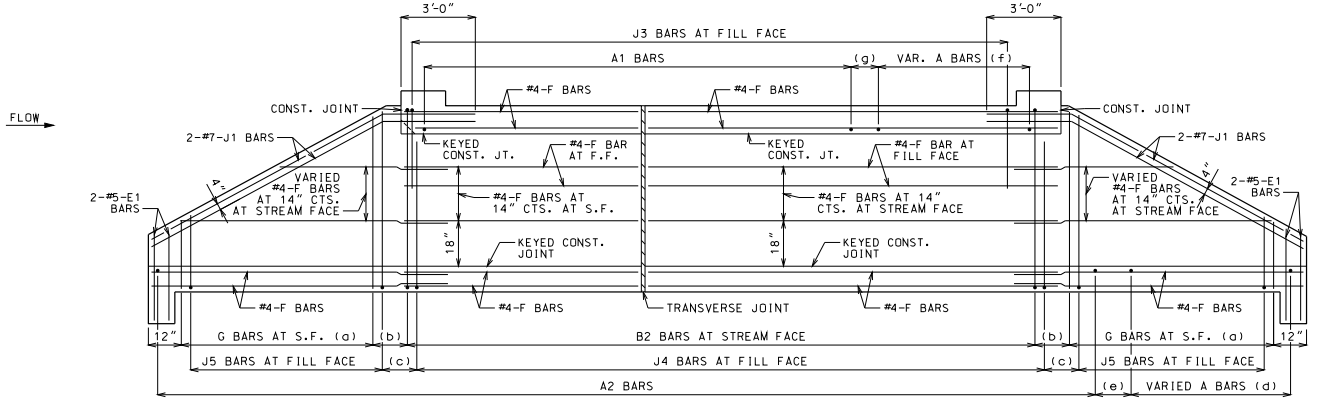

ELEVATION

J1 BARS MAY BE BENT IN FIELD OR SHOP.

LAYING OUT TRANVERSE JOINTS

UNLESS SHOWN ON ROADWAY OR BRIDGE PLANS

USE A TRANSVERSE JOINT WHEN BARREL LENGTH IS OVER 80 FEET. USE ADDITIONAL JOINTS TO LIMIT CUT SECTION LENGTH AND END SECTION BARREL LENGTH MEASURED ALONG CENTERLINE OF CULVERT TO 50 FEET.

MINIMUM END SECTION LENGTH SHALL BE 3 FEET MEASURED ALONG THE SHORTEST WALL FROM THE INSIDE FACE OF HEADWALL TO THE TRANSVERSE JOINT.

TO AVOID LOCATING TRANSVERSE JOINTS UNDER A TRAVELED WAY WITH DESIGN FILLS 2 FEET OR LESS THE FOLLOWING SHALL APPLY:

BARREL LENGTH UP TO 90 FEET WITHOUT A TRANSVERSE JOINT

CUT SECTION LENGTHS UP TO 60 FEET

WHEN BARREL AND CUT SECTION LENGTH RESTRICTIONS REQUIRE TRANSVERSE JOINTS TO BE LOCATED UNDER A TRAVELED WAY WITH DESIGN FILLS 2 FEET OR LESS, THE JOINTS SHALL BE LOCATED TO MINIMIZE THE LENGTH OF JOINT UNDER THE TRAVELED WAY.

TRAVELED WAY IS THE ROADWAY WIDTH MINUS SHOULDER WIDTHS.

FOR CUT SECTION DETAILS. SEE 703.16.

GENERAL NOTES:

FOR SECTIONS THRU BARREL, WINGS AND HEADWALLS. SEE SHEET 3 OF 3. FOR BAR SIZES, SPACING AND DIMENSIONS OF ALL REINFORCEMENT EXCEPT J5 BARS, SEE 703.17. FOR J5 BARS, SEE 703.37.

CONSTRUCTION JOINT KEY NOT SHOWN FOR CLARITY IN HALF PLANS AND ELEVATION. SEE SHEET 3 OF 3 FOR DETAILS.

DRAWING NOT TO SCALE. FOLLOW DIMENSIONS.

MINIMUM CLEARANCE TO REINFORCING STEEL SHALL BE 1½".

LAP LONGITUDINAL BARS A MINIMUM OF 23" AT SPLICES.

BEVELED HEADWALL SHALL BE LOCATED AT UPSTREAM END.

(a) SAME SIZE AND SPACING AS B2 BARS

(b) VARIES, 12" MAXIMUM

(c) J4 BAR SPACING

(d) SAME SIZE AND SPACING AS A2 BARS

(e) A2 BAR SPACING

(f) SAME SIZE AND SPACING AS A1 BARS

(g) A1 BAR SPACING

(h) FOR DESIGN FILLS OVER 2'-0"

(i) FOR DESIGN FILLS 2'-0" OR LESS

MISSOURI HIGHWAYS AND TRANSPORTATION COMMISSION
105 WEST CAPITOL
JEFFERSON CITY, MO 65102
1-888-ASK-MODOT (1-888-275-6636)

STATE OF MISSOURI
DENNIS W. HECKMAN
NUMBER PE-27141
PROFESSIONAL ENGINEER
THIS SHEET HAS BEEN SIGNED, SEALED AND DATED ELECTRONICALLY.

CONCRETE SINGLE BOX CULVERT

SKEW: LEFT ADVANCE
WINGS: STRAIGHT

REINFORCEMENT

DATE EFFECTIVE: 04/01/2011
DATE PREPARED: 9/8/2011

703.12H

SHEET NO. 2 OF 3

IF A SEAL IS PRESENT ON THIS SHEET IT HAS BEEN ELECTRONICALLY SEALED AND DATED.

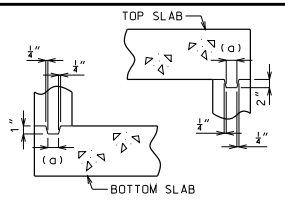

KEYED CONSTRUCTION JOINT

(a) APPROXIMATELY ONE-THIRD OF WALL THICKNESS

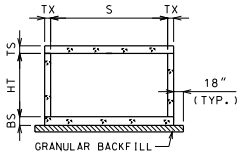

GRANULAR BACKFILL LIMITS AND MEMBER DIMENSIONS

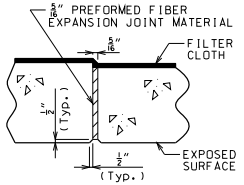

TRANSVERSE JOINT THRU BARREL

PREFORMED FIBER EXPANSION JOINT MATERIAL SHALL BE SECURELY STITCHED TO ONE FACE OF THE CONCRETE WITH NO. 10 GAGE COPPER WIRE OR NO. 12 GAGE SOFT DRAWN GALVANIZED STEEL WIRE.

FILTER CLOTH 3 FEET IN WIDTH AND DOUBLE THICKNESS SHALL BE CENTERED ON TRANSVERSE JOINTS IN TOP SLAB AND SIDEWALLS WITH EDGES SEALED WITH MASTIC OR TWO SIDED TAPE. FILTER CLOTH SHALL BE A SUBSURFACE DRAINAGE GEOTEXTILE IN ACCORDANCE WITH SECTION 1011 OF THE STANDARD SPECIFICATIONS FOR HIGHWAY CONSTRUCTION. COST OF FURNISHING AND INSTALLING FILTER CLOTH WILL BE CONSIDERED COMPLETELY COVERED BY THE CONTRACT UNIT PRICE FOR OTHER ITEMS.

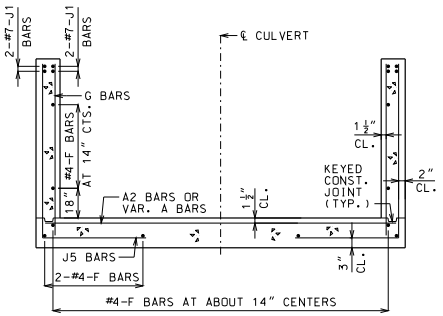

UPSTREAM AND DOWNSTREAM WINGS REINFORCEMENT

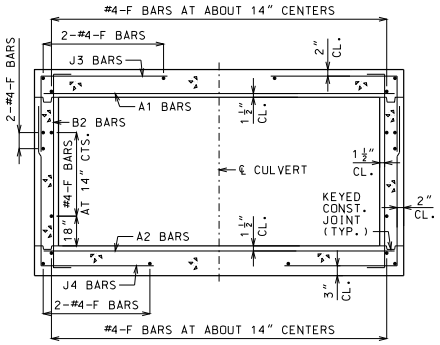

BARREL REINFORCEMENT

FOR DESIGN FILLS OVER 2'-0"

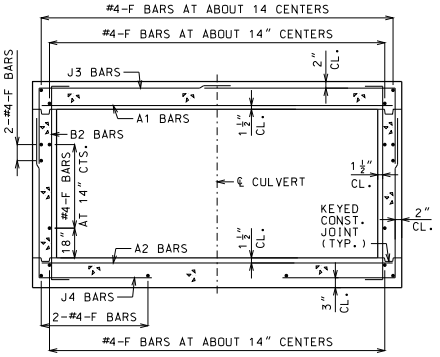

BARREL REINFORCEMENT

FOR DESIGN FILLS 2'-0" OR LESS

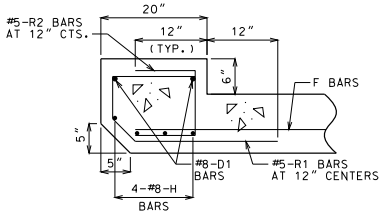

UPSTREAM HEADWALL REINFORCEMENT

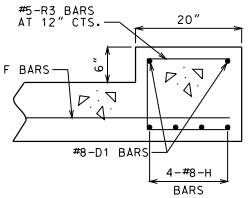

DOWNSTREAM HEADWALL REINFORCEMENT

GENERAL NOTES:

FOR MEMBER THICKNESS AND FOR BAR SIZES, SPACING AND DIMENSIONS OF ALL REINFORCEMENT EXCEPT J5 BARS, SEE 703.17. FOR J5 BARS, SEE 703.37.

BARREL AND WINGS SECTIONS ARE SYMMETRICAL ABOUT AND NORMAL TO ℄ CULVERT. HEADWALL SECTIONS ARE NORMAL TO LONG DIRECTION OF HEADWALL.

DRAWING NOT TO SCALE. FOLLOW DIMENSIONS.

MINIMUM CLEARANCE TO REINFORCING STEEL SHALL BE 1 1/2".

MISSOURI HIGHWAYS AND TRANSPORTATION COMMISSION
105 WEST CAPITOL
JEFFERSON CITY, MO 65102
1-888-ASK-MODOT (1-888-275-6636)

STATE OF MISSOURI
DENNIS W. HECKMAN
NUMBER PE-27141
PROFESSIONAL ENGINEER
THIS SHEET HAS BEEN SIGNED, SEALED AND DATED ELECTRONICALLY.

CONCRETE SINGLE BOX CULVERT

SKEW: LEFT ADVANCE
WINGS: STRAIGHT

SECTIONS

DATE EFFECTIVE: 04/01/2011
DATE PREPARED: 9/8/2011

703.12H

SHEET NO. 3 OF 3

IF A SEAL IS PRESENT ON THIS SHEET IT HAS BEEN ELECTRONICALLY SEALED AND DATED.

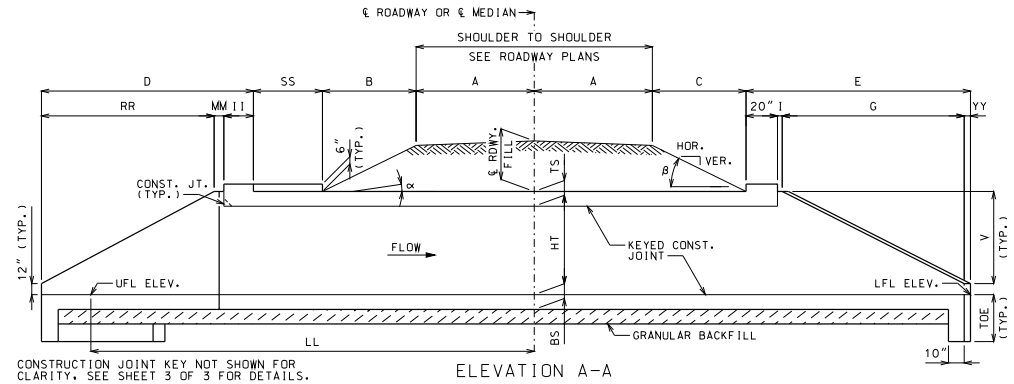

ELEVATION A-A

CONSTRUCTION JOINT KEY NOT SHOWN FOR CLARITY. SEE SHEET 3 OF 3 FOR DETAILS.

IF UNSUITABLE MATERIAL IS ENCOUNTERED, EXCAVATION OF UNSUITABLE MATERIAL AND FURNISHING AND PLACING OF GRANULAR BACKFILL SHALL BE IN ACCORDANCE WITH SECTION 206 OF THE STANDARD SPECIFICATIONS FOR HIGHWAY CONSTRUCTION.

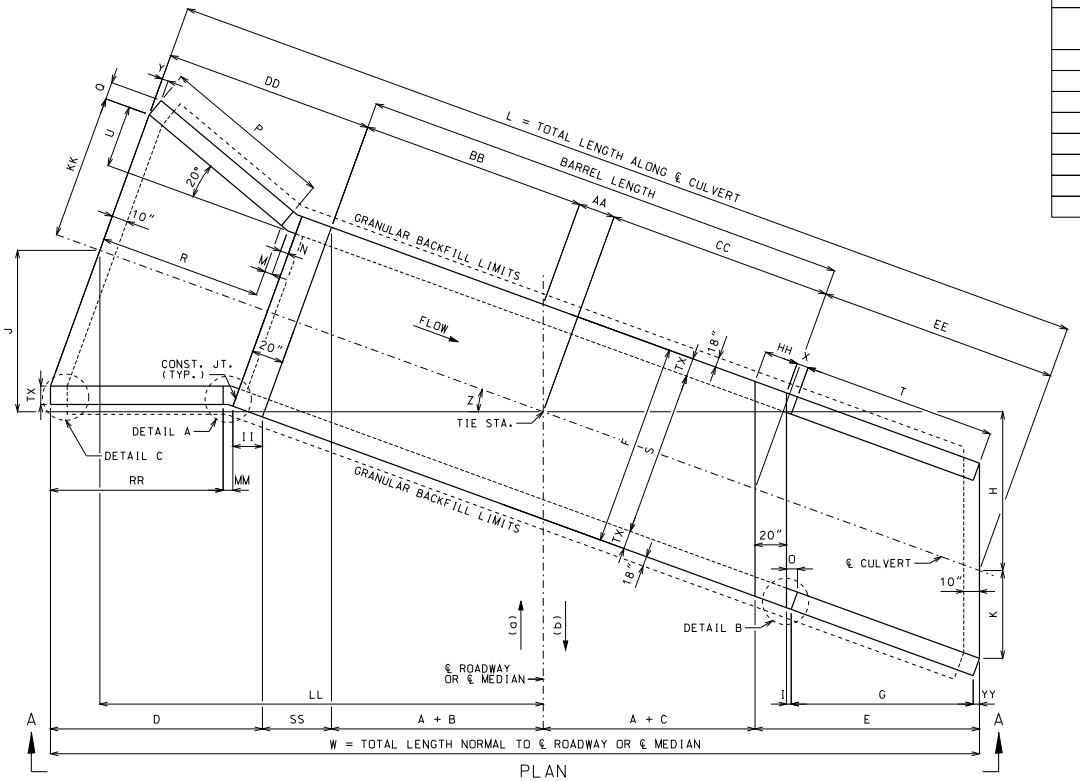

PLAN

(a) AHEAD STATION WHERE STREAM FLOWS LEFT TO RIGHT. (b) AHEAD STATION WHERE STREAM FLOWS RIGHT TO LEFT.

EQUATIONS FOR COMPUTING α, β, B AND C

α = ANGLE OF BARREL SLOPE WITH HORIZONTAL NORMAL TO ℄ ROADWAY OR ℄ MEDIAN = $\arctan\left(\frac{\text{UFL ELEV.} - \text{LFL ELEV.}}{W}\right)$

β = ANGLE OF FILL SLOPE WITH HORIZONTAL NORMAL TO ℄ ROADWAY OR ℄ MEDIAN = $\arctan\left(\frac{\text{VER.}}{\text{HOR.}}\right)$

B = HORIZONTAL DISTANCE FROM UPSTREAM EDGE OF SHOULDER TO UPSTREAM HEADWALL NORMAL TO ℄ ROADWAY OR ℄ MEDIAN = $\frac{\text{℄ RDWY. FILL} + A(CS) - A(TAN\alpha)}{TAN\beta + TAN\alpha}$

C = HORIZONTAL DISTANCE FROM DOWNSTREAM EDGE OF SHOULDER TO DOWNSTREAM HEADWALL NORMAL TO ℄ ROADWAY OR ℄ MEDIAN = $\frac{\text{℄ RDWY. FILL} + A(CS) + A(TAN\alpha)}{TAN\beta - TAN\alpha}$

CS = CROSS SLOPE OF EACH PART OF ROADWAY INCLUDING CROWN, LANES AND SHOULDERS. CS IS POSITIVE IF RISING AND NEGATIVE IF FALLING AWAY FROM ℄ ROADWAY OR ℄ MEDIAN.

THE TERM "A(CS)" IS THE DIFFERENCE IN ELEVATION BETWEEN ℄ ROADWAY OR ℄ MEDIAN AND THE TOP OF THE FILL SLOPE NORMAL TO ℄ ROADWAY OR ℄ MEDIAN. THIS TERM SHALL BE ADJUSTED FOR UNSYMMETRICAL AND NONSTANDARD ROADWAYS.

TO ACCOUNT FOR A VARYING PROFILE GRADE THE ℄ ROADWAY FILL SHALL BE BASED ON STATIONS THAT CORRESPOND TO THE CORNERS OF THE INSIDE FACE OF THE HEADWALLS THAT PRODUCE MAXIMUM VALUES FOR B AND C.

SEE ROADWAY PLANS FOR FILL SLOPES, CROSS SLOPES, ℄ ROADWAY FILL, UPPER FLOW LINE (UFL) ELEVATION AND LOWER FLOW LINE (LFL) ELEVATION.

LAYOUT DIMENSIONS

VARIABLE	DIMENSION
α	SEE EQUATIONS
β	SEE EQUATIONS
B	SEE EQUATIONS
C	SEE EQUATIONS
D	Z ≥ 20°: II + MM + RR
	Z < 20°: II + MM + RR + TT
E	G + O + 20"
F	S + 2TX
G	2V
H	(A + C + E)(TAN Z)
I	3"(COS Z)
J	(AA + BB + DD)(SIN Z)
K	(S/2)(SEC Z)
L	AA + BB + CC + DD + EE

VARIABLE	DIMENSION
M	N(COS 20°)
N	3" + TX(TAN 10°)
O	I + YY
P	2V[SEC(Z + 20°)]
Q	TX(COS 20°)
R	P(COS 20°)
T	G(SEC Z)
U	(R + M)(TAN 20°)
V	HT + TS - 12"
W	2A + B + C + D + E + SS
X	3" + TX(TAN Z)
Y	TX(SIN 20°)
Z	SKEW ANGLE
AA	(F/2)(TAN Z)

VARIABLE	DIMENSION
BB	(A + B)(SEC Z)
CC	(A + C)(SEC Z)
DD	R + M + N + 20"
EE	E(SEC Z)
HH	20"(SEC Z)
II	20"(COS Z)
KK	(S/2) + U
LL	(AA + BB + DD)(COS Z)
MM	3"[COS Z + COS(Z - 20°)]
RR	P [COS (Z - 20°)]
SS	F(SIN Z)
TT	TX[SIN(20° - Z)]
YY	TX(SIN Z)
TOE	MAX{(BS + 12"), 40"}

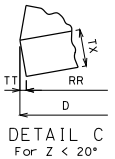

DETAIL C
For Z < 20°

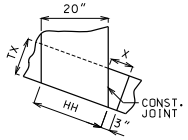

DETAIL B

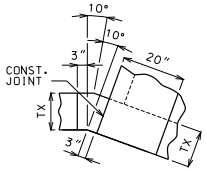

DETAIL A

GENERAL NOTES:

DESIGN SPECIFICATIONS: 2010 AASHTO LRFD BRIDGE DESIGN SPECFICATIONS AND 2010 INTERIM REVISIONS

DESIGN UNIT STRESSES: CLASS B-1 CONCRETE f'c = 4,000 PSI
REINFORCING STEEL (GRADE 60) fy = 60,000 PSI

DESIGN LOADS: VEHICULAR = HL-93 MINUS LANE LOAD
EARTH = 120 LB/FT³
EQUIVALENT FLUID PRESSURE = 30 LB/FT³ (MIN.) - 60 LB/FT³ (MAX.)

FOR REINFORCEMENT DETAILS, SEE SHEET 2 OF 3. FOR SECTION DETAILS, SEE SHEET 3 OF 3. FOR MEMBER THICKNESS, SEE 703.17.

DRAWING NOT TO SCALE. FOLLOW DIMENSIONS.

DIMENSIONS ARE IN INCHES UNLESS OTHERWISE NOTED.

WHEN ALTERNATE PRECAST CONCRETE BOX CULVERT SECTIONS ARE USED, THE MINIMUM DISTANCE FROM INSIDE FACE OF HEADWALLS TO PRECAST SECTIONS MEASURED ALONG THE SHORTEST WALL SHALL BE 3 FEET. REINFORCEMENT AND DIMENSIONS FOR WINGS AND HEADWALLS SHALL BE IN ACCORDANCE WITH MISSOURI STANDARD PLANS.

MISSOURI HIGHWAYS AND TRANSPORTATION COMMISSION
105 WEST CAPITOL
JEFFERSON CITY, MO 65102
1-888-ASK-MODOT (1-888-275-6636)

STATE OF MISSOURI — DENNIS W. HECKMAN — NUMBER PE-27141 — PROFESSIONAL ENGINEER
THIS SHEET HAS BEEN SIGNED, SEALED AND DATED ELECTRONICALLY.

CONCRETE SINGLE BOX CULVERT

SKEW: LEFT ADVANCE
WINGS: FLARED

LAYOUT

DATE EFFECTIVE:	04/01/2011	703.13H	SHEET NO. 1 OF 3
DATE PREPARED:	9/8/2011		

IF A SEAL IS PRESENT ON THIS SHEET IT HAS BEEN ELECTRONICALLY SEALED AND DATED.

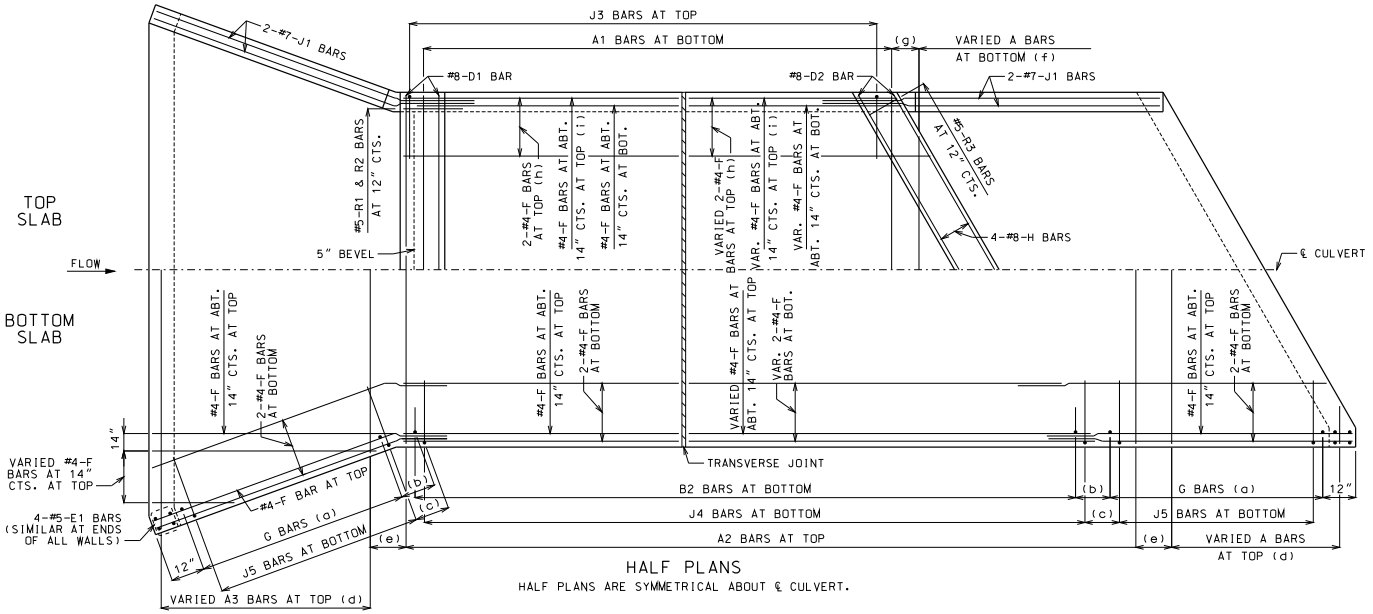

HALF PLANS

HALF PLANS ARE SYMMETRICAL ABOUT ℄ CULVERT.

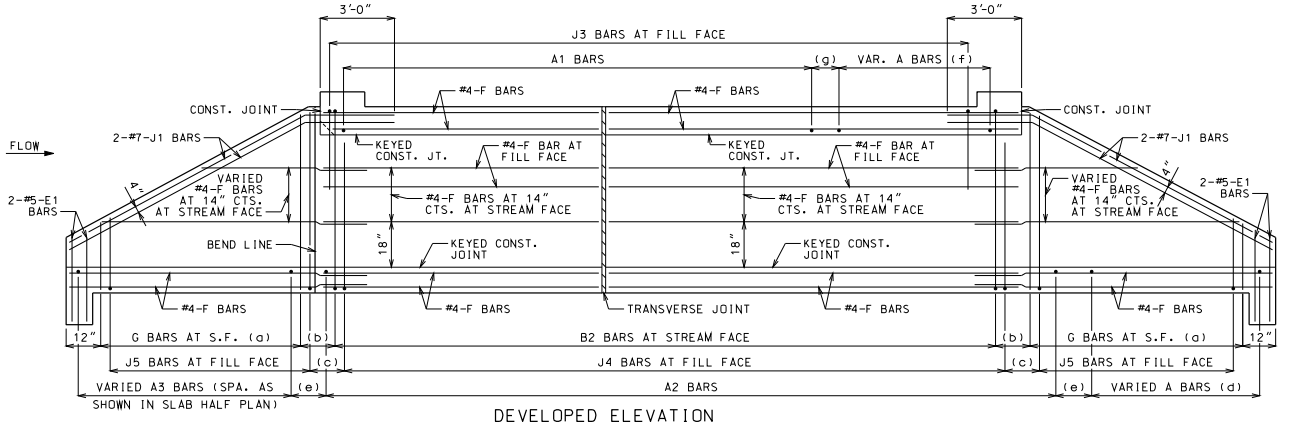

DEVELOPED ELEVATION

J1 BARS MAY BE BENT IN FIELD OR SHOP.

LAYING OUT TRANVERSE JOINTS

UNLESS SHOWN ON ROADWAY OR BRIDGE PLANS

USE A TRANSVERSE JOINT WHEN BARREL LENGTH IS OVER 80 FEET. USE ADDITIONAL JOINTS TO LIMIT CUT SECTION LENGTH AND END SECTION BARREL LENGTH MEASURED ALONG CENTERLINE OF CULVERT TO 50 FEET.

MINIMUM END SECTION LENGTH SHALL BE 3 FEET MEASURED ALONG THE SHORTEST WALL FROM THE INSIDE FACE OF HEADWALL TO THE TRANSVERSE JOINT.

TO AVOID LOCATING TRANSVERSE JOINTS UNDER A TRAVELED WAY WITH DESIGN FILLS 2 FEET OR LESS THE FOLLOWING SHALL APPLY:

BARREL LENGTH UP TO 90 FEET WITHOUT A TRANSVERSE JOINT

CUT SECTION LENGTHS UP TO 60 FEET

WHEN BARREL AND CUT SECTION LENGTH RESTRICTIONS REQUIRE TRANSVERSE JOINTS TO BE LOCATED UNDER A TRAVELED WAY WITH DESIGN FILLS 2 FEET OR LESS, THE JOINTS SHALL BE LOCATED TO MINIMIZE THE LENGTH OF JOINT UNDER THE TRAVELED WAY.

TRAVELED WAY IS THE ROADWAY WIDTH MINUS SHOULDER WIDTHS.

FOR CUT SECTION DETAILS. SEE 703.16.

GENERAL NOTES:

FOR SECTIONS THRU BARREL, WINGS AND HEADWALLS. SEE SHEET 3 OF 3. FOR BAR SIZES, SPACING AND DIMENSIONS OF ALL REINFORCEMENT EXCEPT J5 BARS. SEE 703.17. FOR J5 BARS. SEE 703.37.

CONSTRUCTION JOINT KEY NOT SHOWN FOR CLARITY IN HALF PLANS AND ELEVATION. SEE SHEET 3 OF 3 FOR DETAILS.

DRAWING NOT TO SCALE. FOLLOW DIMENSIONS.

MINIMUM CLEARANCE TO REINFORCING STEEL SHALL BE 1½".

LAP LONGITUDINAL BARS A MINIMUM OF 23" AT SPLICES.

BEVELED HEADWALL SHALL BE LOCATED AT UPSTREAM END.

(a) SAME SIZE AND SPACING AS B2 BARS

(b) VARIES. 12" MAXIMUM

(c) J4 BAR SPACING

(d) SAME SIZE AND SPACING AS A2 BARS

(e) A2 BAR SPACING

(f) SAME SIZE AND SPACING AS A1 BARS

(g) A1 BAR SPACING

(h) FOR DESIGN FILLS OVER 2'-0"

(i) FOR DESIGN FILLS 2'-0" OR LESS

MISSOURI HIGHWAYS AND TRANSPORTATION COMMISSION
105 WEST CAPITOL
JEFFERSON CITY, MO 65102
1-888-ASK-MODOT (1-888-275-6636)

STATE OF MISSOURI
DENNIS W. HECKMAN
NUMBER PE-27141
PROFESSIONAL ENGINEER
THIS SHEET HAS BEEN SIGNED, SEALED AND DATED ELECTRONICALLY.

CONCRETE SINGLE BOX CULVERT

SKEW: LEFT ADVANCE
WINGS: FLARED

REINFORCEMENT

DATE EFFECTIVE: 04/01/2011
DATE PREPARED: 9/8/2011

703.13H

SHEET NO. 2 OF 3

IF A SEAL IS PRESENT ON THIS SHEET IT HAS BEEN ELECTRONICALLY SEALED AND DATED.

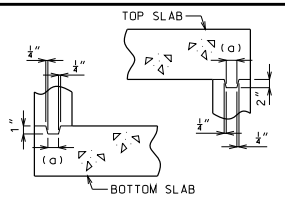

KEYED CONSTRUCTION JOINT

(a) APPROXIMATELY ONE-THIRD OF WALL THICKNESS

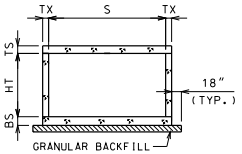

GRANULAR BACKFILL LIMITS AND MEMBER DIMENSIONS

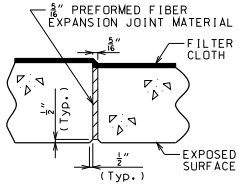

TRANSVERSE JOINT THRU BARREL

PREFORMED FIBER EXPANSION JOINT MATERIAL SHALL BE SECURELY STITCHED TO ONE FACE OF THE CONCRETE WITH NO. 10 GAGE COPPER WIRE OR NO. 12 GAGE SOFT DRAWN GALVANIZED STEEL WIRE.

FILTER CLOTH 3 FEET IN WIDTH AND DOUBLE THICKNESS SHALL BE CENTERED ON TRANSVERSE JOINTS IN TOP SLAB AND SIDEWALLS WITH EDGES SEALED WITH MASTIC OR TWO SIDED TAPE. FILTER CLOTH SHALL BE A SUBSURFACE DRAINAGE GEOTEXTILE IN ACCORDANCE WITH SECTION 1011 OF THE STANDARD SPECIFICATIONS FOR HIGHWAY CONSTRUCTION. COST OF FURNISHING AND INSTALLING FILTER CLOTH WILL BE CONSIDERED COMPLETELY COVERED BY THE CONTRACT UNIT PRICE FOR OTHER ITEMS.

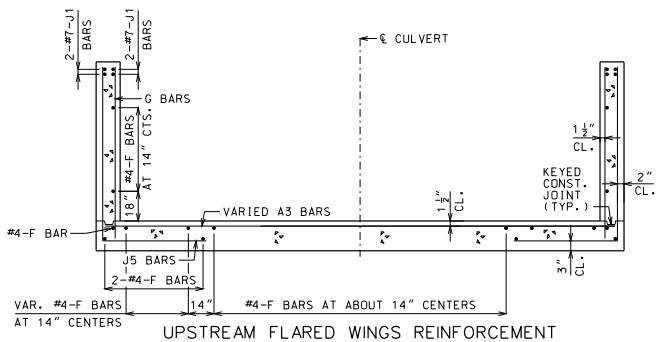

UPSTREAM FLARED WINGS REINFORCEMENT

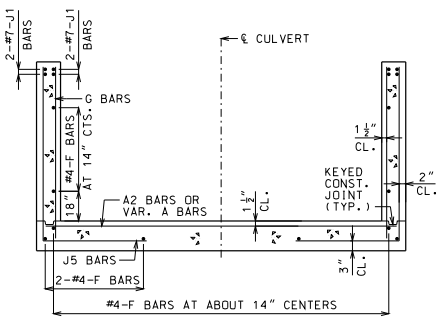

DOWNSTREAM WINGS REINFORCEMENT

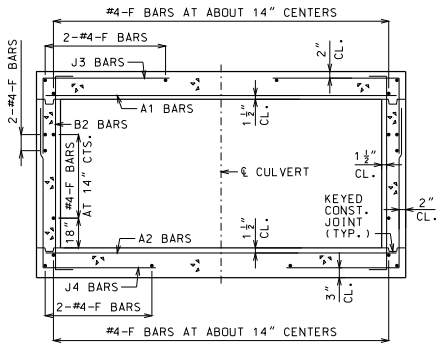

BARREL REINFORCEMENT

FOR DESIGN FILLS OVER 2'-0"

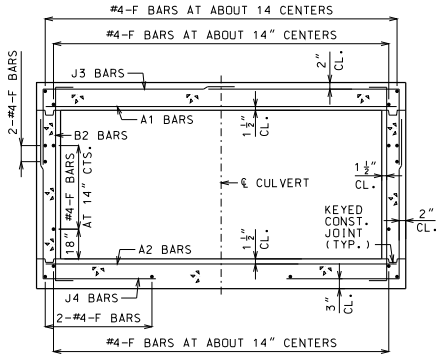

BARREL REINFORCEMENT

FOR DESIGN FILLS 2'-0" OR LESS

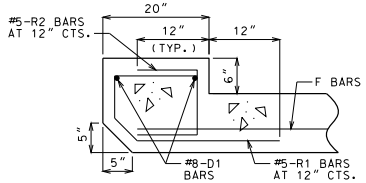

UPSTREAM HEADWALL REINFORCEMENT

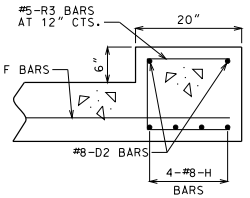

DOWNSTREAM HEADWALL REINFORCEMENT

GENERAL NOTES:

FOR MEMBER THICKNESS AND FOR BAR SIZES, SPACING AND DIMENSIONS OF ALL REINFORCEMENT EXCEPT J5 BARS, SEE 703.17. FOR J5 BARS, SEE 703.37.

BARREL AND WINGS SECTIONS ARE SYMMETRICAL ABOUT AND NORMAL TO ℄ CULVERT. HEADWALL SECTIONS ARE NORMAL TO LONG DIRECTION OF HEADWALL.

DRAWING NOT TO SCALE. FOLLOW DIMENSIONS.

MINIMUM CLEARANCE TO REINFORCING STEEL SHALL BE 1 1/2".

MISSOURI HIGHWAYS AND TRANSPORTATION COMMISSION
105 WEST CAPITOL
JEFFERSON CITY, MO 65102
1-888-ASK-MODOT (1-888-275-6636)

STATE OF MISSOURI
DENNIS W. HECKMAN
NUMBER PE-27141
PROFESSIONAL ENGINEER
THIS SHEET HAS BEEN SIGNED, SEALED AND DATED ELECTRONICALLY.

CONCRETE SINGLE BOX CULVERT

SKEW: LEFT ADVANCE
WINGS: FLARED

SECTIONS

DATE EFFECTIVE: 04/01/2011
DATE PREPARED: 9/8/2011

703.13H

SHEET NO. 3 OF 3

IF A SEAL IS PRESENT ON THIS SHEET IT HAS BEEN ELECTRONICALLY SEALED AND DATED.

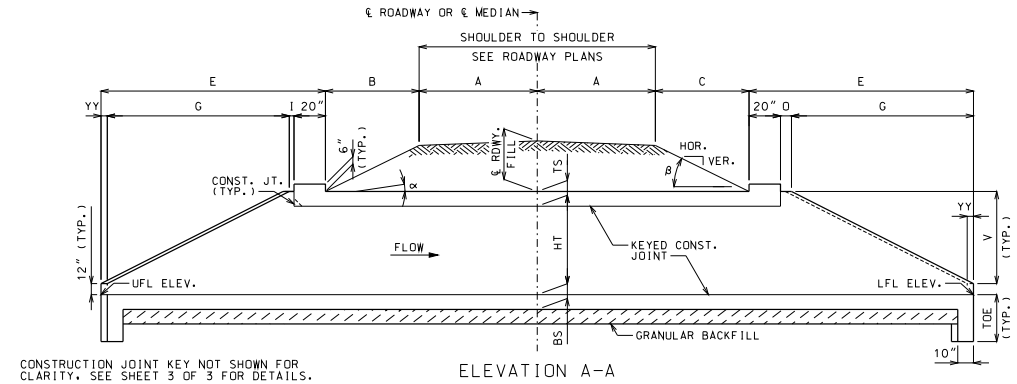

ELEVATION A-A

CONSTRUCTION JOINT KEY NOT SHOWN FOR CLARITY. SEE SHEET 3 OF 3 FOR DETAILS.

IF UNSUITABLE MATERIAL IS ENCOUNTERED, EXCAVATION OF UNSUITABLE MATERIAL AND FURNISHING AND PLACING OF GRANULAR BACKFILL SHALL BE IN ACCORDANCE WITH SECTION 206 OF THE STANDARD SPECIFICATIONS FOR HIGHWAY CONSTRUCTION.

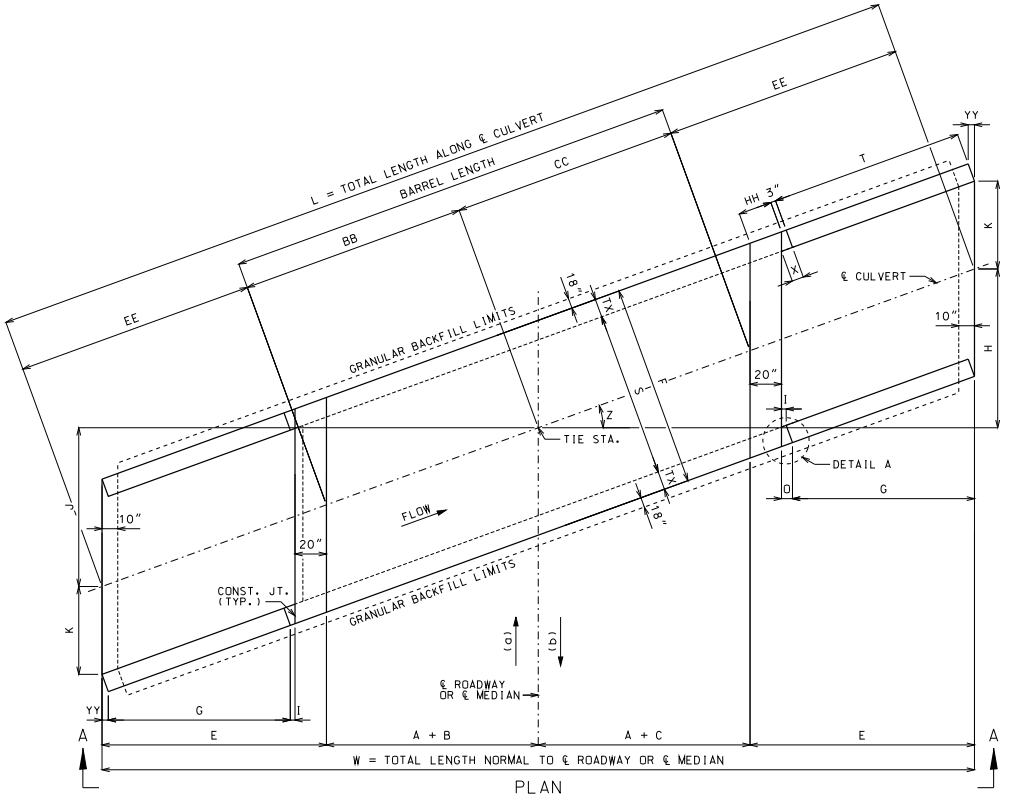

PLAN

(a) AHEAD STATION WHERE STREAM FLOWS LEFT TO RIGHT. (b) AHEAD STATION WHERE STREAM FLOWS RIGHT TO LEFT.

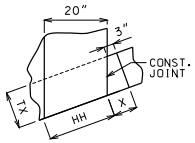

DETAIL A

EQUATIONS FOR COMPUTING α, β, B AND C

α = ANGLE OF BARREL SLOPE WITH HORIZONTAL NORMAL TO ℄ ROADWAY OR ℄ MEDIAN = $\arctan\left(\frac{\text{UFL ELEV.} - \text{LFL ELEV.}}{W}\right)$

β = ANGLE OF FILL SLOPE WITH HORIZONTAL NORMAL TO ℄ ROADWAY OR ℄ MEDIAN = $\arctan\left(\frac{\text{VER.}}{\text{HOR.}}\right)$

B = HORIZONTAL DISTANCE FROM UPSTREAM EDGE OF SHOULDER TO UPSTREAM HEADWALL NORMAL TO ℄ ROADWAY OR ℄ MEDIAN = $\frac{\text{℄ RDWY. FILL} + A(CS) - A(TAN\alpha)}{TAN\beta + TAN\alpha}$

C = HORIZONTAL DISTANCE FROM DOWNSTREAM EDGE OF SHOULDER TO DOWNSTREAM HEADWALL NORMAL TO ℄ ROADWAY OR ℄ MEDIAN = $\frac{\text{℄ RDWY. FILL} + A(CS) + A(TAN\alpha)}{TAN\beta - TAN\alpha}$

CS = CROSS SLOPE OF EACH PART OF ROADWAY INCLUDING CROWN, LANES AND SHOULDERS. CS IS POSITIVE IF RISING AND NEGATIVE IF FALLING AWAY FROM ℄ ROADWAY OR ℄ MEDIAN.

THE TERM "A(CS)" IS THE DIFFERENCE IN ELEVATION BETWEEN ℄ ROADWAY OR ℄ MEDIAN AND THE TOP OF THE FILL SLOPE NORMAL TO ℄ ROADWAY OR ℄ MEDIAN. THIS TERM SHALL BE ADJUSTED FOR UNSYMMETRICAL AND NONSTANDARD ROADWAYS.

TO ACCOUNT FOR A VARYING PROFILE GRADE THE ℄ ROADWAY FILL SHALL BE BASED ON STATIONS THAT CORRESPOND TO THE CORNERS OF THE INSIDE FACE OF THE HEADWALLS THAT PRODUCE MAXIMUM VALUES FOR B AND C.

SEE ROADWAY PLANS FOR FILL SLOPES, CROSS SLOPES, ℄ ROADWAY FILL, UPPER FLOW LINE (UFL) ELEVATION AND LOWER FLOW LINE (LFL) ELEVATION.

LAYOUT DIMENSIONS

VARIABLE	DIMENSION
α	SEE EQUATIONS
β	SEE EQUATIONS
B	SEE EQUATIONS
C	SEE EQUATIONS
E	G + O + 20"
F	S + 2TX
G	2V
H	(A + C + E)(TAN Z)
I	3"(COS Z)
J	(A + B + E)(TAN Z)
K	(S/2)(SEC Z)
L	2EE + BB + CC
O	I + YY

VARIABLE	DIMENSION
O	TX(COS Z)
T	G(SEC Z)
V	HT + TS - 12"
W	2A + B + C + 2E
X	3" + TX(TAN Z)
Z	SKEW ANGLE
BB	(A + B)(SEC Z)
CC	(A + C)(SEC Z)
EE	E(SEC Z)
HH	20"(SEC Z)
YY	TX(SIN Z)
TOE	MAX{(BS + 12"), 40"}

GENERAL NOTES:

DESIGN SPECIFICATIONS: 2010 AASHTO LRFD BRIDGE DESIGN SPECFICATIONS AND 2010 INTERIM REVISIONS

DESIGN UNIT STRESSES: CLASS B-1 CONCRETE f'c = 4,000 PSI
REINFORCING STEEL (GRADE 60) fy = 60,000 PSI

DESIGN LOADS: VEHICULAR = HL-93 MINUS LANE LOAD
EARTH = 120 LB/FT³
EQUIVALENT FLUID PRESSURE = 30 LB/FT³ (MIN.) - 60 LB/FT³ (MAX.)

FOR REINFORCEMENT DETAILS, SEE SHEET 2 OF 3. FOR SECTION DETAILS, SEE SHEET 3 OF 3. FOR MEMBER THICKNESS, SEE 703.17.

DRAWING NOT TO SCALE. FOLLOW DIMENSIONS.

DIMENSIONS ARE IN INCHES UNLESS OTHERWISE NOTED.

WHEN ALTERNATE PRECAST CONCRETE BOX CULVERT SECTIONS ARE USED, THE MINIMUM DISTANCE FROM INSIDE FACE OF HEADWALLS TO PRECAST SECTIONS MEASURED ALONG THE SHORTEST WALL SHALL BE 3 FEET. REINFORCEMENT AND DIMENSIONS FOR WINGS AND HEADWALLS SHALL BE IN ACCORDANCE WITH MISSOURI STANDARD PLANS.

MISSOURI HIGHWAYS AND TRANSPORTATION COMMISSION
105 WEST CAPITOL
JEFFERSON CITY, MO 65102
1-888-ASK-MODOT (1-888-275-6636)

STATE OF MISSOURI
DENNIS W. HECKMAN
NUMBER PE-27141
PROFESSIONAL ENGINEER
THIS SHEET HAS BEEN SIGNED, SEALED AND DATED ELECTRONICALLY.

CONCRETE SINGLE BOX CULVERT

SKEW: RIGHT ADVANCE
WINGS: STRAIGHT

LAYOUT

DATE EFFECTIVE: 04/01/2011
DATE PREPARED: 9/8/2011

703.14H

SHEET NO. 1 OF 3

IF A SEAL IS PRESENT ON THIS SHEET IT HAS BEEN ELECTRONICALLY SEALED AND DATED.

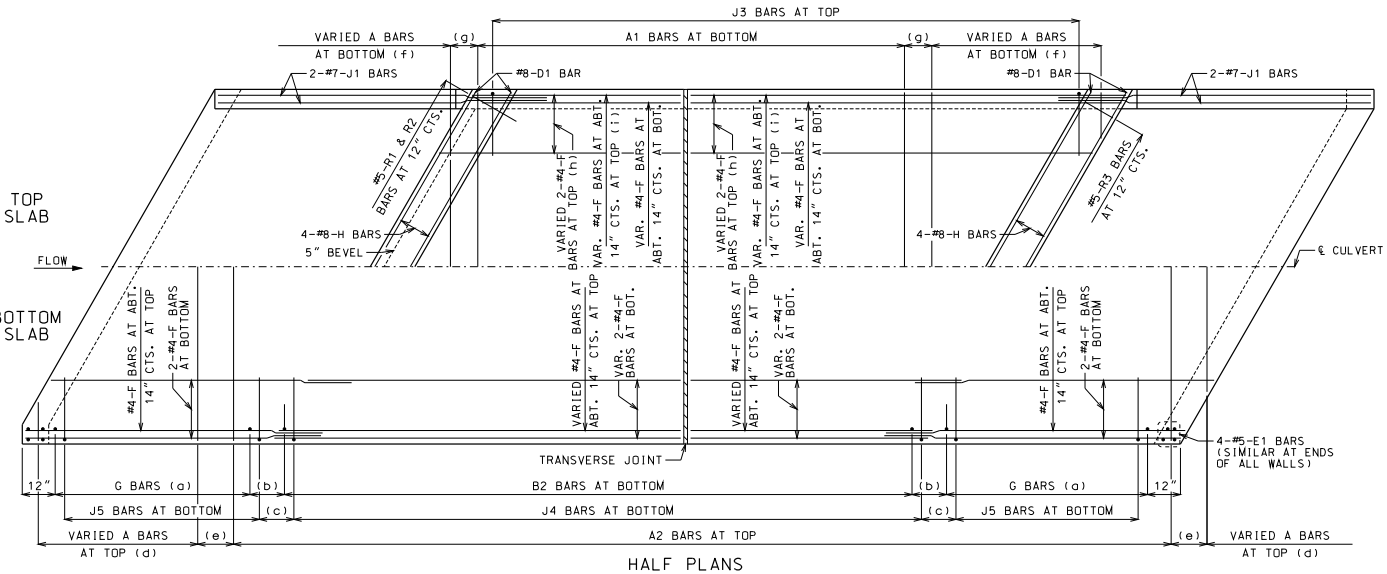

HALF PLANS

HALF PLANS ARE SYMMETRICAL ABOUT ℄ CULVERT.

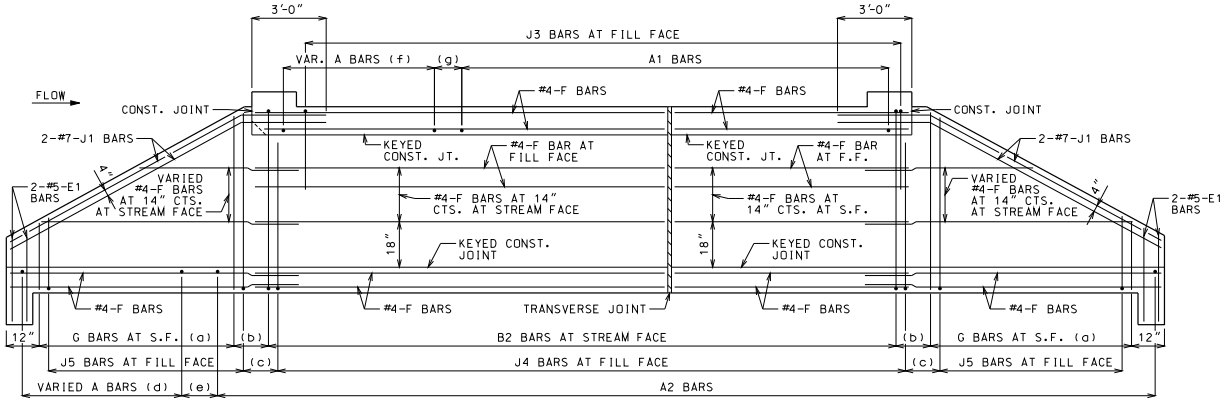

ELEVATION

J1 BARS MAY BE BENT IN FIELD OR SHOP.

LAYING OUT TRANVERSE JOINTS

UNLESS SHOWN ON ROADWAY OR BRIDGE PLANS

USE A TRANSVERSE JOINT WHEN BARREL LENGTH IS OVER 80 FEET. USE ADDITIONAL JOINTS TO LIMIT CUT SECTION LENGTH AND END SECTION BARREL LENGTH MEASURED ALONG CENTERLINE OF CULVERT TO 50 FEET.

MINIMUM END SECTION LENGTH SHALL BE 3 FEET MEASURED ALONG THE SHORTEST WALL FROM THE INSIDE FACE OF HEADWALL TO THE TRANSVERSE JOINT.

TO AVOID LOCATING TRANSVERSE JOINTS UNDER A TRAVELED WAY WITH DESIGN FILLS 2 FEET OR LESS THE FOLLOWING SHALL APPLY:

BARREL LENGTH UP TO 90 FEET WITHOUT A TRANSVERSE JOINT

CUT SECTION LENGTHS UP TO 60 FEET

WHEN BARREL AND CUT SECTION LENGTH RESTRICTIONS REQUIRE TRANSVERSE JOINTS TO BE LOCATED UNDER A TRAVELED WAY WITH DESIGN FILLS 2 FEET OR LESS, THE JOINTS SHALL BE LOCATED TO MINIMIZE THE LENGTH OF JOINT UNDER THE TRAVELED WAY.

TRAVELED WAY IS THE ROADWAY WIDTH MINUS SHOULDER WIDTHS.

FOR CUT SECTION DETAILS. SEE 703.16.

GENERAL NOTES:

FOR SECTIONS THRU BARREL, WINGS AND HEADWALLS. SEE SHEET 3 OF 3. FOR BAR SIZES, SPACING AND DIMENSIONS OF ALL REINFORCEMENT EXCEPT J5 BARS, SEE 703.17. FOR J5 BARS, SEE 703.37.

CONSTRUCTION JOINT KEY NOT SHOWN FOR CLARITY IN HALF PLANS AND ELEVATION. SEE SHEET 3 OF 3 FOR DETAILS.

DRAWING NOT TO SCALE. FOLLOW DIMENSIONS.

MINIMUM CLEARANCE TO REINFORCING STEEL SHALL BE 1½".

LAP LONGITUDINAL BARS A MINIMUM OF 23" AT SPLICES.

BEVELED HEADWALL SHALL BE LOCATED AT UPSTREAM END.

(a) SAME SIZE AND SPACING AS B2 BARS

(b) VARIES, 12" MAXIMUM

(c) J4 BAR SPACING

(d) SAME SIZE AND SPACING AS A2 BARS

(e) A2 BAR SPACING

(f) SAME SIZE AND SPACING AS A1 BARS

(g) A1 BAR SPACING

(h) FOR DESIGN FILLS OVER 2'-0"

(i) FOR DESIGN FILLS 2'-0" OR LESS

MISSOURI HIGHWAYS AND TRANSPORTATION COMMISSION
105 WEST CAPITOL
JEFFERSON CITY, MO 65102
1-888-ASK-MODOT (1-888-275-6636)

STATE OF MISSOURI
DENNIS W. HECKMAN
NUMBER PE-27141
PROFESSIONAL ENGINEER
THIS SHEET HAS BEEN SIGNED, SEALED AND DATED ELECTRONICALLY.

CONCRETE SINGLE BOX CULVERT

SKEW: RIGHT ADVANCE
WINGS: STRAIGHT

REINFORCEMENT

DATE EFFECTIVE: 04/01/2011
DATE PREPARED: 9/8/2011

703.14H

SHEET NO. 2 OF 3

IF A SEAL IS PRESENT ON THIS SHEET IT HAS BEEN ELECTRONICALLY SEALED AND DATED.

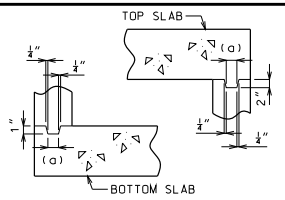

KEYED CONSTRUCTION JOINT

(a) APPROXIMATELY ONE-THIRD OF WALL THICKNESS

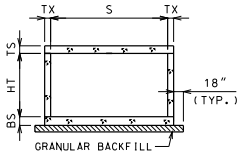

GRANULAR BACKFILL LIMITS AND MEMBER DIMENSIONS

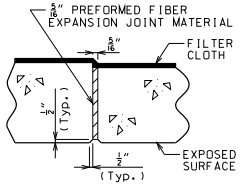

TRANSVERSE JOINT THRU BARREL

PREFORMED FIBER EXPANSION JOINT MATERIAL SHALL BE SECURELY STITCHED TO ONE FACE OF THE CONCRETE WITH NO. 10 GAGE COPPER WIRE OR NO. 12 GAGE SOFT DRAWN GALVANIZED STEEL WIRE.

FILTER CLOTH 3 FEET IN WIDTH AND DOUBLE THICKNESS SHALL BE CENTERED ON TRANSVERSE JOINTS IN TOP SLAB AND SIDEWALLS WITH EDGES SEALED WITH MASTIC OR TWO SIDED TAPE. FILTER CLOTH SHALL BE A SUBSURFACE DRAINAGE GEOTEXTILE IN ACCORDANCE WITH SECTION 1011 OF THE STANDARD SPECIFICATIONS FOR HIGHWAY CONSTRUCTION. COST OF FURNISHING AND INSTALLING FILTER CLOTH WILL BE CONSIDERED COMPLETELY COVERED BY THE CONTRACT UNIT PRICE FOR OTHER ITEMS.

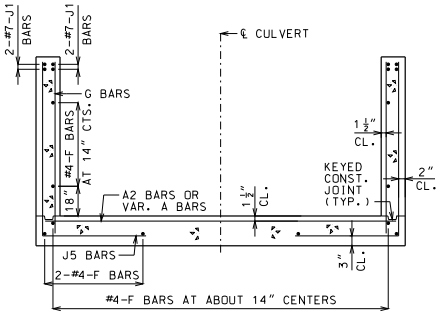

UPSTREAM AND DOWNSTREAM WINGS REINFORCEMENT

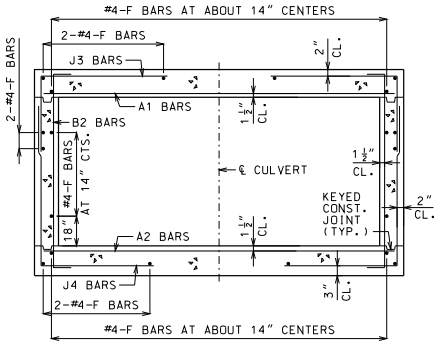

BARREL REINFORCEMENT

FOR DESIGN FILLS OVER 2'-0"

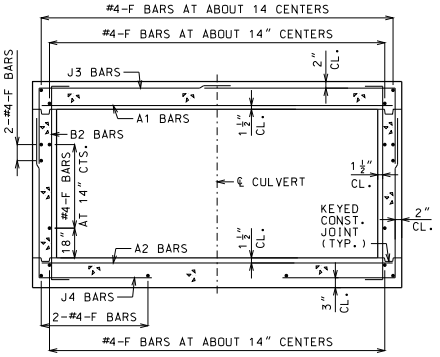

BARREL REINFORCEMENT

FOR DESIGN FILLS 2'-0" OR LESS

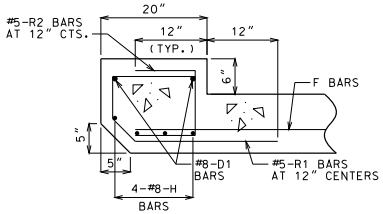

UPSTREAM HEADWALL REINFORCEMENT

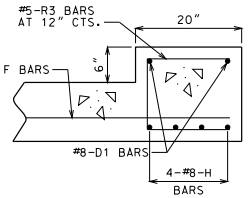

DOWNSTREAM HEADWALL REINFORCEMENT

GENERAL NOTES:

FOR MEMBER THICKNESS AND FOR BAR SIZES, SPACING AND DIMENSIONS OF ALL REINFORCEMENT EXCEPT J5 BARS, SEE 703.17. FOR J5 BARS, SEE 703.37.

BARREL AND WINGS SECTIONS ARE SYMMETRICAL ABOUT AND NORMAL TO ℄ CULVERT. HEADWALL SECTIONS ARE NORMAL TO LONG DIRECTION OF HEADWALL.

DRAWING NOT TO SCALE. FOLLOW DIMENSIONS.

MINIMUM CLEARANCE TO REINFORCING STEEL SHALL BE 1 1/2".

MISSOURI HIGHWAYS AND TRANSPORTATION COMMISSION
105 WEST CAPITOL
JEFFERSON CITY, MO 65102
1-888-ASK-MODOT (1-888-275-6636)

STATE OF MISSOURI
DENNIS W. HECKMAN
NUMBER PE-27141
PROFESSIONAL ENGINEER
THIS SHEET HAS BEEN SIGNED, SEALED AND DATED ELECTRONICALLY.

CONCRETE SINGLE BOX CULVERT

SKEW: RIGHT ADVANCE
WINGS: STRAIGHT

SECTIONS

DATE EFFECTIVE: 04/01/2011
DATE PREPARED: 9/8/2011

703.14H

SHEET NO. 3 OF 3

IF A SEAL IS PRESENT ON THIS SHEET IT HAS BEEN ELECTRONICALLY SEALED AND DATED.

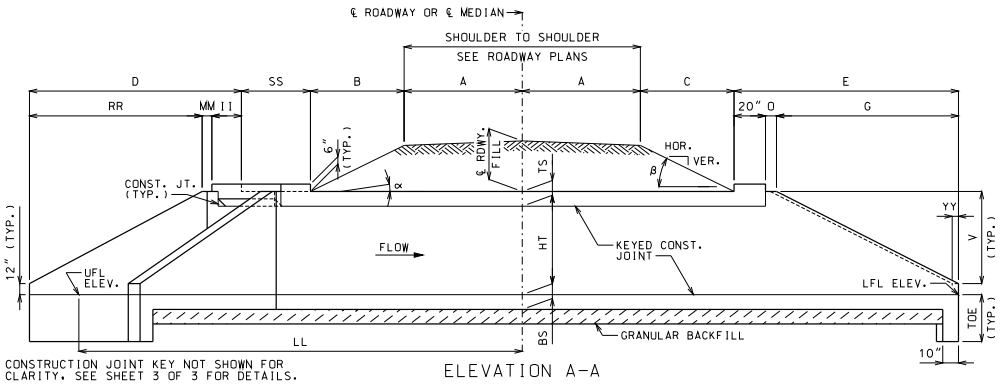

CONSTRUCTION JOINT KEY NOT SHOWN FOR CLARITY. SEE SHEET 3 OF 3 FOR DETAILS.

ELEVATION A-A

IF UNSUITABLE MATERIAL IS ENCOUNTERED, EXCAVATION OF UNSUITABLE MATERIAL AND FURNISHING AND PLACING OF GRANULAR BACKFILL SHALL BE IN ACCORDANCE WITH SECTION 206 OF THE STANDARD SPECIFICATIONS FOR HIGHWAY CONSTRUCTION.

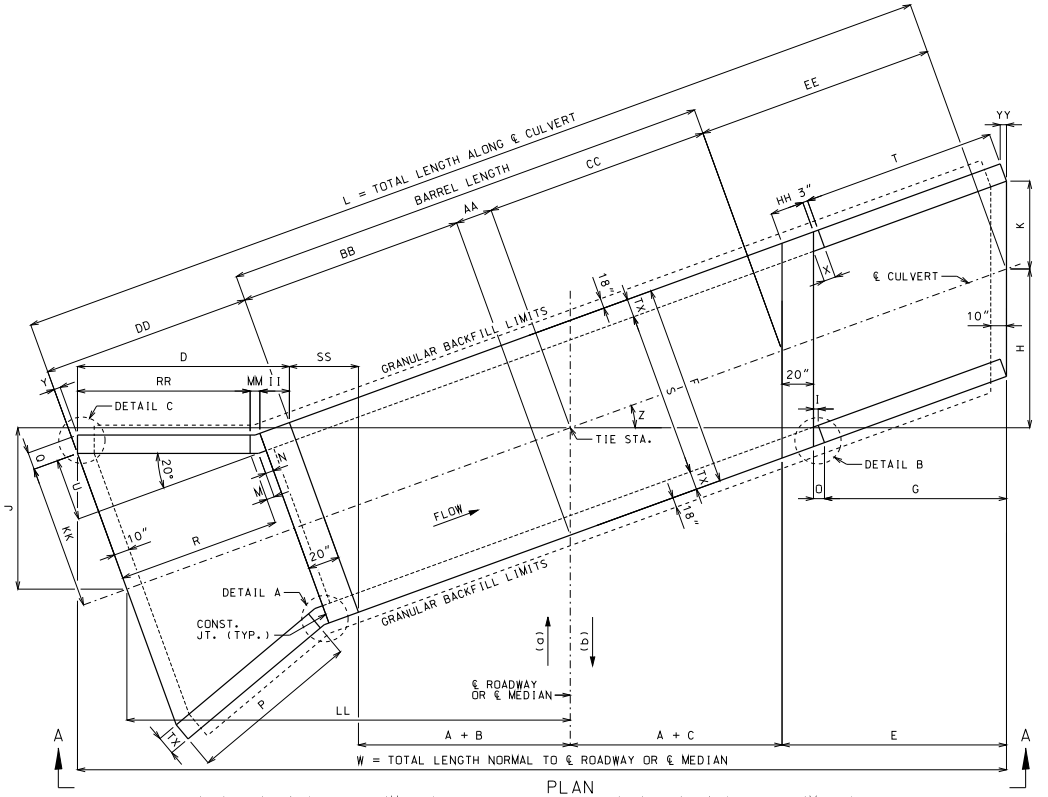

PLAN

(a) AHEAD STATION WHERE STREAM FLOWS LEFT TO RIGHT. (b) AHEAD STATION WHERE STREAM FLOWS RIGHT TO LEFT.

EQUATIONS FOR COMPUTING α, β, B AND C

α = ANGLE OF BARREL SLOPE WITH HORIZONTAL NORMAL TO ℄ ROADWAY OR ℄ MEDIAN = $\arctan\left(\frac{\text{UFL ELEV.} - \text{LFL ELEV.}}{W}\right)$

β = ANGLE OF FILL SLOPE WITH HORIZONTAL NORMAL TO ℄ ROADWAY OR ℄ MEDIAN = $\arctan\left(\frac{\text{VER.}}{\text{HOR.}}\right)$

B = HORIZONTAL DISTANCE FROM UPSTREAM EDGE OF SHOULDER TO UPSTREAM HEADWALL NORMAL TO ℄ ROADWAY OR ℄ MEDIAN = $\frac{\text{℄ RDWY. FILL} + A(CS) - A(TAN\alpha)}{TAN\beta + TAN\alpha}$

C = HORIZONTAL DISTANCE FROM DOWNSTREAM EDGE OF SHOULDER TO DOWNSTREAM HEADWALL NORMAL TO ℄ ROADWAY OR ℄ MEDIAN = $\frac{\text{℄ RDWY. FILL} + A(CS) + A(TAN\alpha)}{TAN\beta - TAN\alpha}$

CS = CROSS SLOPE OF EACH PART OF ROADWAY INCLUDING CROWN, LANES AND SHOULDERS. CS IS POSITIVE IF RISING AND NEGATIVE IF FALLING AWAY FROM ℄ ROADWAY OR ℄ MEDIAN.

THE TERM "A(CS)" IS THE DIFFERENCE IN ELEVATION BETWEEN ℄ ROADWAY OR ℄ MEDIAN AND THE TOP OF THE FILL SLOPE NORMAL TO ℄ ROADWAY OR ℄ MEDIAN. THIS TERM SHALL BE ADJUSTED FOR UNSYMMETRICAL AND NONSTANDARD ROADWAYS.

TO ACCOUNT FOR A VARYING PROFILE GRADE THE ℄ ROADWAY FILL SHALL BE BASED ON STATIONS THAT CORRESPOND TO THE CORNERS OF THE INSIDE FACE OF THE HEADWALLS THAT PRODUCE MAXIMUM VALUES FOR B AND C.

SEE ROADWAY PLANS FOR FILL SLOPES, CROSS SLOPES, ℄ ROADWAY FILL, UPPER FLOW LINE (UFL) ELEVATION AND LOWER FLOW LINE (LFL) ELEVATION.

LAYOUT DIMENSIONS

VARIABLE	DIMENSION
α	SEE EQUATIONS
β	SEE EQUATIONS
B	SEE EQUATIONS
C	SEE EQUATIONS
D	Z ≤ 20°: II + MM + RR
	Z > 20°: II + MM + RR + TT
E	G + O + 20"
F	S + 2TX
G	2V
H	(A + C + E)(TAN Z)
I	3"(COS Z)
J	(AA + BB + DD)(SIN Z)
K	(S/2)(SEC Z)
L	AA + BB + CC + DD + EE

VARIABLE	DIMENSION
M	N(COS 20°)
N	3" + TX(TAN 10°)
O	I + YY
P	2V[SEC(Z + 20°)]
Q	TX(COS 20°)
R	P(COS 20°)
T	G(SEC Z)
U	(R + M)(TAN 20°)
V	HT + TS - 12"
W	2A + B + C + D + E + SS
X	3" + TX(TAN Z)
Y	TX(SIN 20°)
Z	SKEW ANGLE
AA	(F/2)(TAN Z)

VARIABLE	DIMENSION
BB	(A + B)(SEC Z)
CC	(A + C)(SEC Z)
DD	R + M + N + 20"
EE	E(SEC Z)
HH	20"(SEC Z)
II	20"(COS Z)
KK	(S/2) + U
LL	(AA + BB + DD)(COS Z)
MM	3"[COS Z + COS(Z - 20°)]
RR	P [COS (Z - 20°)]
SS	F(SIN Z)
TT	TX[SIN(Z - 20°)]
YY	TX(SIN Z)
TOE	MAX{(BS + 12"), 40"}

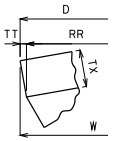

DETAIL C
For Z > 20°

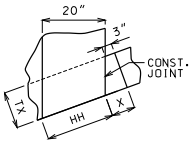

DETAIL B

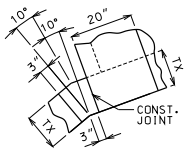

DETAIL A

GENERAL NOTES:

DESIGN SPECIFICATIONS: 2010 AASHTO LRFD BRIDGE DESIGN SPECFICATIONS AND 2010 INTERIM REVISIONS

DESIGN UNIT STRESSES: CLASS B-1 CONCRETE f'c = 4,000 PSI
REINFORCING STEEL (GRADE 60) fy = 60,000 PSI

DESIGN LOADS: VEHICULAR = HL-93 MINUS LANE LOAD
EARTH = 120 LB/FT³
EQUIVALENT FLUID PRESSURE = 30 LB/FT³ (MIN.) - 60 LB/FT³ (MAX.)

FOR REINFORCEMENT DETAILS, SEE SHEET 2 OF 3. FOR SECTION DETAILS, SEE SHEET 3 OF 3. FOR MEMBER THICKNESS, SEE 703.17.

DRAWING NOT TO SCALE. FOLLOW DIMENSIONS.

DIMENSIONS ARE IN INCHES UNLESS OTHERWISE NOTED.

WHEN ALTERNATE PRECAST CONCRETE BOX CULVERT SECTIONS ARE USED, THE MINIMUM DISTANCE FROM INSIDE FACE OF HEADWALLS TO PRECAST SECTIONS MEASURED ALONG THE SHORTEST WALL SHALL BE 3 FEET. REINFORCEMENT AND DIMENSIONS FOR WINGS AND HEADWALLS SHALL BE IN ACCORDANCE WITH MISSOURI STANDARD PLANS.

MISSOURI HIGHWAYS AND TRANSPORTATION COMMISSION
105 WEST CAPITOL
JEFFERSON CITY, MO 65102
1-888-ASK-MODOT (1-888-275-6636)

STATE OF MISSOURI
DENNIS W. HECKMAN
NUMBER PE-27141
PROFESSIONAL ENGINEER
THIS SHEET HAS BEEN SIGNED, SEALED AND DATED ELECTRONICALLY.

CONCRETE SINGLE BOX CULVERT

SKEW: RIGHT ADVANCE
WINGS: FLARED

LAYOUT

DATE EFFECTIVE: 04/01/2011
DATE PREPARED: 9/8/2011

703.15D

SHEET NO. 1 OF 3

IF A SEAL IS PRESENT ON THIS SHEET IT HAS BEEN ELECTRONICALLY SEALED AND DATED.

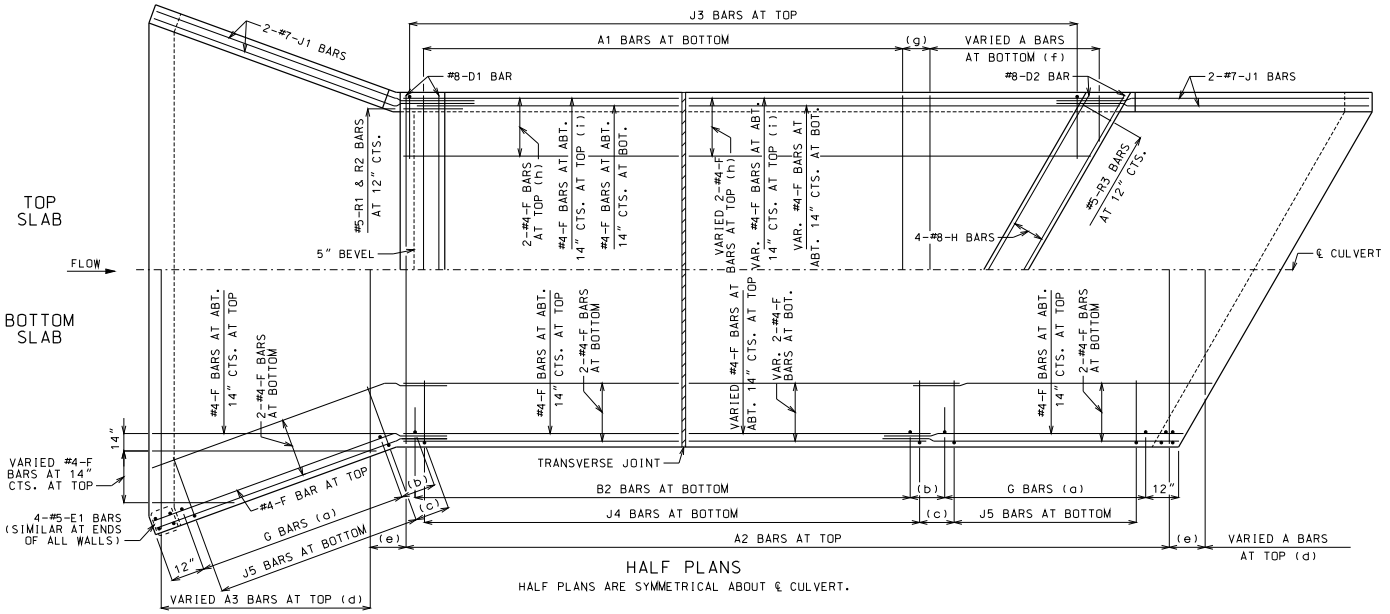

HALF PLANS

HALF PLANS ARE SYMMETRICAL ABOUT ℄ CULVERT.

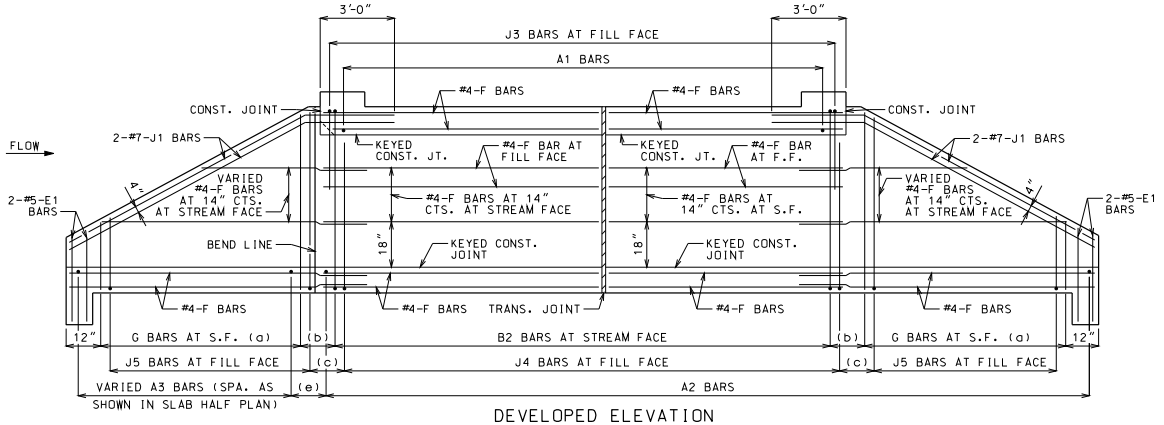

DEVELOPED ELEVATION

J1 BARS MAY BE BENT IN FIELD OR SHOP.

LAYING OUT TRANVERSE JOINTS

UNLESS SHOWN ON ROADWAY OR BRIDGE PLANS

USE A TRANSVERSE JOINT WHEN BARREL LENGTH IS OVER 80 FEET. USE ADDITIONAL JOINTS TO LIMIT CUT SECTION LENGTH AND END SECTION BARREL LENGTH MEASURED ALONG CENTERLINE OF CULVERT TO 50 FEET.

MINIMUM END SECTION LENGTH SHALL BE 3 FEET MEASURED ALONG THE SHORTEST WALL FROM THE INSIDE FACE OF HEADWALL TO THE TRANSVERSE JOINT.

TO AVOID LOCATING TRANSVERSE JOINTS UNDER A TRAVELED WAY WITH DESIGN FILLS 2 FEET OR LESS THE FOLLOWING SHALL APPLY:

BARREL LENGTH UP TO 90 FEET WITHOUT A TRANSVERSE JOINT

CUT SECTION LENGTHS UP TO 60 FEET

WHEN BARREL AND CUT SECTION LENGTH RESTRICTIONS REQUIRE TRANSVERSE JOINTS TO BE LOCATED UNDER A TRAVELED WAY WITH DESIGN FILLS 2 FEET OR LESS, THE JOINTS SHALL BE LOCATED TO MINIMIZE THE LENGTH OF JOINT UNDER THE TRAVELED WAY.

TRAVELED WAY IS THE ROADWAY WIDTH MINUS SHOULDER WIDTHS.

FOR CUT SECTION DETAILS, SEE 703.16.

GENERAL NOTES:

FOR SECTIONS THRU BARREL, WINGS AND HEADWALLS, SEE SHEET 3 OF 3. FOR BAR SIZES, SPACING AND DIMENSIONS OF ALL REINFORCEMENT EXCEPT J5 BARS, SEE 703.17. FOR J5 BARS, SEE 703.37.

CONSTRUCTION JOINT KEY NOT SHOWN FOR CLARITY IN HALF PLANS AND ELEVATION. SEE SHEET 3 OF 3 FOR DETAILS.

DRAWING NOT TO SCALE. FOLLOW DIMENSIONS.

MINIMUM CLEARANCE TO REINFORCING STEEL SHALL BE 1½".

LAP LONGITUDINAL BARS A MINIMUM OF 23" AT SPLICES.

BEVELED HEADWALL SHALL BE LOCATED AT UPSTREAM END.

(a) SAME SIZE AND SPACING AS B2 BARS

(b) VARIES, 12" MAXIMUM

(c) J4 BAR SPACING

(d) SAME SIZE AND SPACING AS A2 BARS

(e) A2 BAR SPACING

(f) SAME SIZE AND SPACING AS A1 BARS

(g) A1 BAR SPACING

(h) FOR DESIGN FILLS OVER 2'-0"

(i) FOR DESIGN FILLS 2'-0" OR LESS

MISSOURI HIGHWAYS AND TRANSPORTATION COMMISSION
105 WEST CAPITOL
JEFFERSON CITY, MO 65102
1-888-ASK-MODOT (1-888-275-6636)

STATE OF MISSOURI
DENNIS W. HECKMAN
NUMBER PE-27141
PROFESSIONAL ENGINEER
THIS SHEET HAS BEEN SIGNED, SEALED AND DATED ELECTRONICALLY.

CONCRETE SINGLE BOX CULVERT

SKEW: RIGHT ADVANCE
WINGS: FLARED

REINFORCEMENT

DATE EFFECTIVE: 04/01/2011
DATE PREPARED: 9/8/2011

703.15D

SHEET NO. 2 OF 3

IF A SEAL IS PRESENT ON THIS SHEET IT HAS BEEN ELECTRONICALLY SEALED AND DATED.

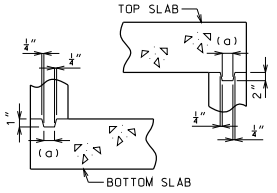

KEYED CONSTRUCTION JOINT

(a) APPROXIMATELY ONE-THIRD OF WALL THICKNESS

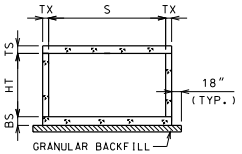

GRANULAR BACKFILL LIMITS AND MEMBER DIMENSIONS

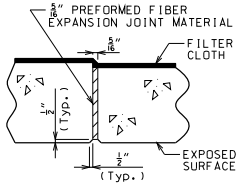

TRANSVERSE JOINT THRU BARREL

PREFORMED FIBER EXPANSION JOINT MATERIAL SHALL BE SECURELY STITCHED TO ONE FACE OF THE CONCRETE WITH NO. 10 GAGE COPPER WIRE OR NO. 12 GAGE SOFT DRAWN GALVANIZED STEEL WIRE.

FILTER CLOTH 3 FEET IN WIDTH AND DOUBLE THICKNESS SHALL BE CENTERED ON TRANSVERSE JOINTS IN TOP SLAB AND SIDEWALLS WITH EDGES SEALED WITH MASTIC OR TWO SIDED TAPE. FILTER CLOTH SHALL BE A SUBSURFACE DRAINAGE GEOTEXTILE IN ACCORDANCE WITH SECTION 1011 OF THE STANDARD SPECIFICATIONS FOR HIGHWAY CONSTRUCTION. COST OF FURNISHING AND INSTALLING FILTER CLOTH WILL BE CONSIDERED COMPLETELY COVERED BY THE CONTRACT UNIT PRICE FOR OTHER ITEMS.

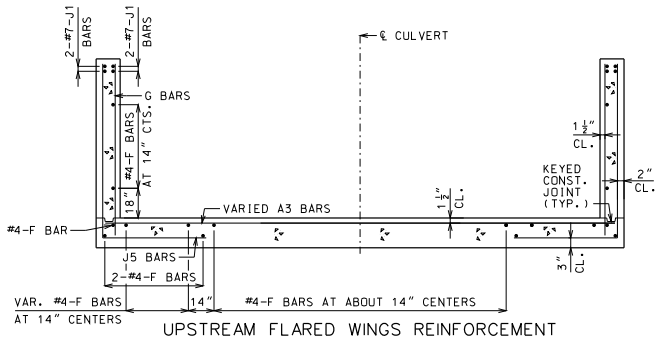

UPSTREAM FLARED WINGS REINFORCEMENT

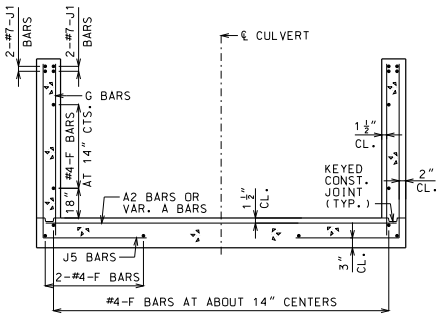

DOWNSTREAM WINGS REINFORCEMENT

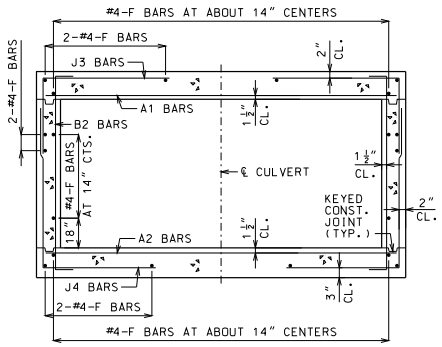

BARREL REINFORCEMENT

FOR DESIGN FILLS OVER 2'-0"

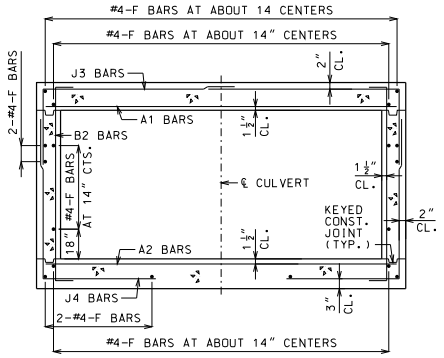

BARREL REINFORCEMENT

FOR DESIGN FILLS 2'-0" OR LESS

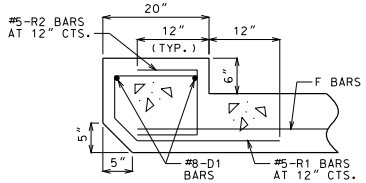

UPSTREAM HEADWALL REINFORCEMENT

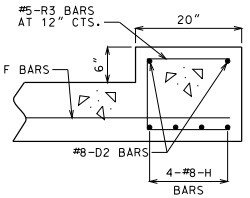

DOWNSTREAM HEADWALL REINFORCEMENT

GENERAL NOTES:

FOR MEMBER THICKNESS AND FOR BAR SIZES, SPACING AND DIMENSIONS OF ALL REINFORCEMENT EXCEPT J5 BARS, SEE 703.17. FOR J5 BARS, SEE 703.37.

BARREL AND WINGS SECTIONS ARE SYMMETRICAL ABOUT AND NORMAL TO ℄ CULVERT. HEADWALL SECTIONS ARE NORMAL TO LONG DIRECTION OF HEADWALL.

DRAWING NOT TO SCALE. FOLLOW DIMENSIONS.

MINIMUM CLEARANCE TO REINFORCING STEEL SHALL BE 1½".

MISSOURI HIGHWAYS AND TRANSPORTATION COMMISSION
105 WEST CAPITOL
JEFFERSON CITY, MO 65102
1-888-ASK-MODOT (1-888-275-6636)

STATE OF MISSOURI
DENNIS W. HECKMAN
NUMBER PE-27141
PROFESSIONAL ENGINEER
THIS SHEET HAS BEEN SIGNED, SEALED AND DATED ELECTRONICALLY.

CONCRETE SINGLE BOX CULVERT

SKEW: RIGHT ADVANCE
WINGS: FLARED

SECTIONS

DATE EFFECTIVE: 04/01/2011
DATE PREPARED: 9/8/2011

703.15D

SHEET NO. 3 OF 3

IF A SEAL IS PRESENT ON THIS SHEET IT HAS BEEN ELECTRONICALLY SEALED AND DATED.

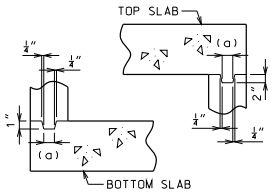

KEYED CONSTRUCTION JOINT

(a) APPROXIMATELY ONE-THIRD OF WALL THICKNESS

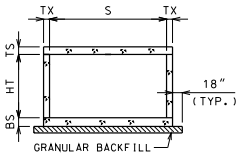

GRANULAR BACKFILL LIMITS AND MEMBER DIMENSIONS

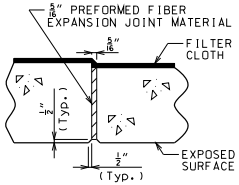

TRANSVERSE JOINT THRU BARREL

PREFORMED FIBER EXPANSION JOINT MATERIAL SHALL BE SECURELY STITCHED TO ONE FACE OF THE CONCRETE WITH NO. 10 GAGE COPPER WIRE OR NO. 12 GAGE SOFT DRAWN GALVANIZED STEEL WIRE.

FILTER CLOTH 3 FEET IN WIDTH AND DOUBLE THICKNESS SHALL BE CENTERED ON TRANSVERSE JOINTS IN TOP SLAB AND SIDEWALLS WITH EDGES SEALED WITH MASTIC OR TWO SIDED TAPE. FILTER CLOTH SHALL BE A SUBSURFACE DRAINAGE GEOTEXTILE IN ACCORDANCE WITH SECTION 1011 OF THE STANDARD SPECIFICATIONS FOR HIGHWAY CONSTRUCTION. COST OF FURNISHING AND INSTALLING FILTER CLOTH WILL BE CONSIDERED COMPLETELY COVERED BY THE CONTRACT UNIT PRICE FOR OTHER ITEMS.

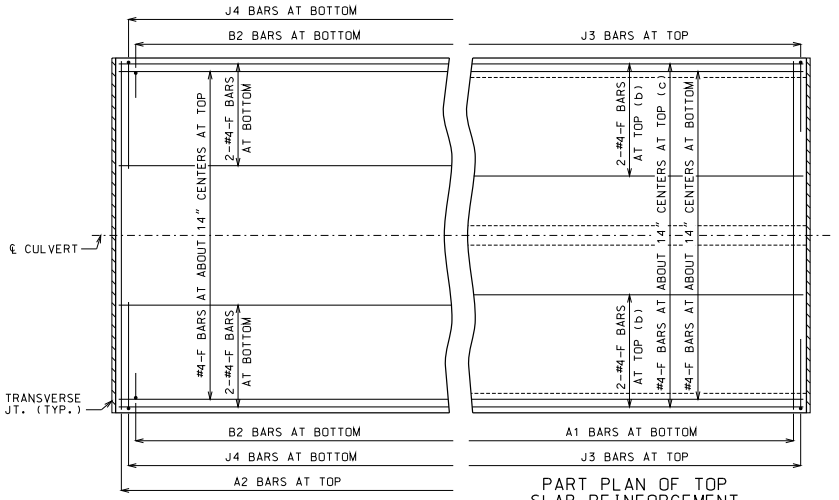

PART PLAN OF BOTTOM SLAB REINFORCEMENT

PART PLAN OF TOP SLAB REINFORCEMENT

(b) FOR DESIGN FILLS OVER 2'-0"
(c) FOR DESIGN FILLS 2'-0" OR LESS

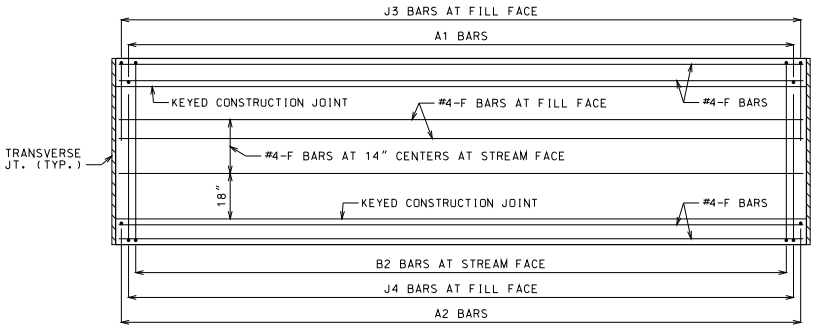

ELEVATION OF WALL REINFORCEMENT

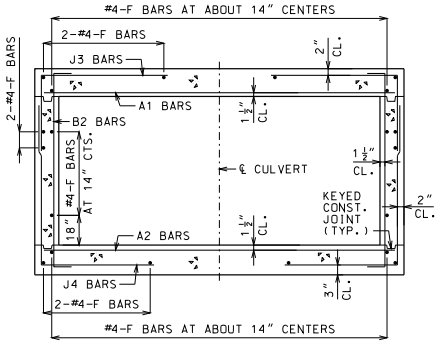

BARREL REINFORCEMENT

FOR DESIGN FILLS OVER 2'-0"
SYMMETRICAL ABOUT AND NORMAL TO ℄ CULVERT.

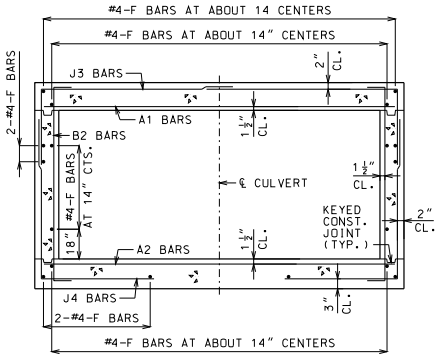

BARREL REINFORCEMENT

FOR DESIGN FILLS 2'-0" OR LESS
SYMMETRICAL ABOUT AND NORMAL TO ℄ CULVERT.

GENERAL NOTES

DESIGN SPECIFICATIONS: 2010 AASHTO LRFD BRIDGE DESIGN SPECFICATIONS AND 2010 INTERIM REVISIONS

DESIGN UNIT STRESSES: CLASS B-1 CONCRETE f'c = 4,000 PSI
REINFORCING STEEL (GRADE 60) fy = 60,000 PSI

DESIGN LOADS: VEHICULAR = HL-93 MINUS LANE LOAD
EARTH = 120 LB/FT³
EQUIVALENT FLUID PRESSURE = 30 LB/FT³ (MIN.) - 60 LB/FT³ (MAX.)

FOR MEMBER THICKNESS AND FOR BAR SIZES, SPACING AND DIMENSIONS, SEE 703.17.

CONSTRUCTION JOINT KEY NOT SHOWN FOR CLARITY IN PART PLANS AND ELEVATION.

DRAWING NOT TO SCALE. FOLLOW DIMENSIONS.

MINIMUM CLEARANCE TO REINFORCING STEEL SHALL BE 1½".

IF A SEAL IS PRESENT ON THIS SHEET IT HAS BEEN ELECTRONICALLY SEALED AND DATED.

MISSOURI HIGHWAYS AND TRANSPORTATION COMMISSION
105 WEST CAPITOL
JEFFERSON CITY, MO 65102
1-888-ASK-MODOT (1-888-275-6636)

STATE OF MISSOURI
DENNIS W. HECKMAN
NUMBER PE-27141
PROFESSIONAL ENGINEER
THIS SHEET HAS BEEN SIGNED, SEALED AND DATED ELECTRONICALLY.

CONCRETE SINGLE BOX CULVERT

CUT SECTION

DATE EFFECTIVE: 04/01/2011
DATE PREPARED: 9/8/2011

703.16

SHEET NO. 1 OF 1

SPAN (S) = 3 FT HEIGHT (HT) = 2 FT OR 3 FT																				
DESIGN FILL	MEMBER THICKNESS			TOP SLAB BARS							BOTTOM SLAB BARS								WALL BARS		
				A1 BARS		J3 BARS					A2 BARS		J4 BARS						B2 BARS		
	TS	BS	TX	SIZE	SPA.	SIZE	SPA.	C1	K2		SIZE	SPA.	SIZE	SPA.	C4	K3		SIZE	SPA.	G1
									HT=2′	HT=3′						HT=2′	HT=3′			
1 FT	9	8	8	4	7	4	12	32.5	25.3	33.6	4	11.5	4	12	32.5	28	40	5	12	12
2 FT	9	8	8	4	7	4	12	32.5	25.3	33.6	4	11.5	4	12	30.8	28	40	5	12	12
4 FT	8	8	8	4	12	4	12	26.4	24.1	32.4	4	12	4	12	26.0	28	40	5	12	0
6 FT	8	8	8	4	12	4	12	24.6	24.1	32.4	4	12	4	12	24.6	28	40	5	12	0
8 FT	8	8	8	4	12	4	12	23.8	24.1	32.4	4	12	4	12	23.8	28	40	5	12	0
10 FT	8	8	8	4	12	4	12	22.0	24.1	32.4	4	12	4	12	22.0	28	40	5	12	0
12 FT	8	8	8	4	12	4	12	22.0	24.1	32.4	4	12	4	12	22.0	28	40	5	12	0
14 FT	8	8	8	4	12	4	12	22.0	24.1	32.4	4	12	4	12	22.0	28	40	5	12	0
16 FT	8	8	8	4	12	4	12	22.0	24.1	32.4	4	12	4	12	22.0	28	40	5	12	0
18 FT	8	8	8	4	12	4	12	22.0	24.1	32.4	4	12	4	12	22.0	28	40	5	12	0
20 FT	8	8	8	4	12	4	12	22.0	24.1	32.4	4	11	4	12	22.0	28	40	5	12	0
22 FT	8	8	8	4	11.5	4	12	22.0	24.1	32.4	4	10	4	12	22.0	28	40	5	12	0
24 FT	8	8	8	4	10.5	4	12	22.0	24.1	32.4	4	9	4	12	22.0	28	40	5	12	0
26 FT	8	8	8	4	9.5	4	12	22.0	24.1	32.4	4	8.5	4	11.5	22.0	28	40	5	12	0
28 FT	8	8	8	4	9	4	11.5	22.0	24.1	32.4	4	8	4	10.5	22.0	28	40	5	12	0
30 FT	8	8	8	4	8.5	4	11	22.0	24.1	32.4	4	7.5	4	10	22.0	28	40	5	12	0
32 FT	8	8	8	4	8	4	10	22.0	24.1	32.4	4	7	4	9.5	22.0	28	40	5	12	0
34 FT	8	8	8	4	7.5	4	9.5	22.0	24.1	32.4	4	6.5	4	8.5	22.0	28	40	5	12	0
36 FT	8	8	8	4	7	4	9	22.0	24.1	32.4	4	6	4	8	22.0	28	40	5	12	0
38 FT	8	8	8	4	6.5	4	8.5	22.0	24.1	32.4	5	9	4	8	22.0	28	40	5	12	0
40 FT	8	9	8	4	6.5	4	8	22.0	24.1	32.1	4	6	4	11	21.5	29	41	5	12	0
42 FT	8	9	8	4	6	4	8	22.0	24.1	32.1	5	9	4	10	21.5	29	41	5	12	0
44 FT	8	9	8	4	6	4	7.5	22.0	24.1	32.1	5	8.5	4	10	21.5	29	41	5	12	0
46 FT	8	9	8	4	6	4	7	22.0	24.1	32.1	5	8	4	9.5	21.5	29	41	5	12	0
48 FT	8	10	8	4	6	4	7	22.0	24.0	31.9	5	8.5	4	12	21.5	30	42	5	12	0
50 FT	8	10	8	4	6	4	6.5	22.0	24.0	31.9	5	8	4	12	21.5	30	42	5	12	0

SPAN (S) = 3 FT HEIGHT (HT) = 4 FT OR 5 FT																				
DESIGN FILL	MEMBER THICKNESS			TOP SLAB BARS							BOTTOM SLAB BARS								WALL BARS		
				A1 BARS		J3 BARS					A2 BARS		J4 BARS						B2 BARS		
	TS	BS	TX	SIZE	SPA.	SIZE	SPA.	C1	K2		SIZE	SPA.	SIZE	SPA.	C4	K3		SIZE	SPA.	G1
									HT=4′	HT=5′						HT=4′	HT=5′			
1 FT	9	8	8	4	6.5	4	12	32.5	25.3	30.3	4	10.5	4	12	32.5	52	64	5	12	12
2 FT	9	8	8	4	6.5	4	12	32.5	25.3	30.3	4	10	4	12	32.5	52	64	5	12	12
4 FT	8	8	8	4	12	4	12	32.5	24.3	29.1	4	12	4	12	32.5	52	64	5	12	0
6 FT	8	8	8	4	12	4	12	36.1	24.3	29.1	4	12	4	12	33.5	52	64	5	12	0
8 FT	8	8	8	4	12	4	12	32.5	24.3	29.1	4	12	4	12	32.5	52	64	5	12	0
10 FT	8	8	8	4	12	4	12	32.5	24.3	29.1	4	12	4	12	32.5	52	64	5	12	0
12 FT	8	8	8	4	12	4	12	35.6	24.3	29.1	4	12	4	12	32.5	52	64	5	12	0
14 FT	8	8	8	4	12	4	12	34.4	24.3	29.1	4	12	4	11.5	36.1	52	64	5	12	0
16 FT	8	8	8	4	12	4	12	33.5	24.3	29.1	4	12	4	11	35.3	52	64	5	12	0
18 FT	8	8	8	4	12	4	12	32.5	24.3	29.1	4	12	4	10.5	34.8	52	64	5	12	0
20 FT	8	8	8	4	12	4	12	31.6	24.3	29.1	4	10.5	4	10	34.4	52	64	5	12	0
22 FT	8	8	8	4	11.5	4	11	31.6	24.3	29.1	4	9.5	4	9.5	33.9	52	64	5	12	0
24 FT	8	8	8	4	10.5	4	10	31.6	24.3	29.1	4	9	4	9	33.9	52	64	5	12	0
26 FT	8	8	8	4	9.5	4	9.5	31.3	24.3	29.1	4	8.5	4	8	33.5	52	64	5	12	0
28 FT	8	8	8	4	9	4	8.5	31.3	24.3	29.1	4	7.5	4	7.5	33.0	52	64	5	12	0
30 FT	8	8	8	4	8.5	4	8	31.3	24.3	29.1	4	7	4	7	33.0	52	64	5	12	0
32 FT	8	8	8	4	8	4	7.5	30.8	24.3	29.1	4	7	4	6.5	33.0	52	64	5	12	0
34 FT	8	8	8	4	7.5	4	7	30.8	24.3	29.1	4	6.5	4	6.5	32.5	52	64	5	12	0
36 FT	8	8	8	4	7	4	7	30.8	24.3	29.1	4	6	4	6	32.5	52	64	5	12	0
38 FT	8	8	8	4	6.5	4	6.5	30.8	24.3	29.1	5	9	5	7	32.5	52	64	5	12	0
40 FT	8	9	8	4	6.5	4	6	30.8	24.0	28.8	4	6	4	6.5	32.5	53	65	5	12	0
42 FT	8	9	8	4	6	4	6	30.8	24.0	28.8	5	9	4	6	32.5	53	65	5	11.5	0
44 FT	8	9	8	4	6	5	6.5	30.8	24.0	28.8	5	8.5	4	6	32.5	53	65	5	11	0
46 FT	8	9	8	4	6	5	6.5	30.4	24.0	28.8	5	8	5	6.5	34.8	53	65	5	10.5	0
48 FT	8	9	8	4	6	5	6	30.4	24.0	28.8	5	8	5	6.5	34.8	53	65	5	10	0
50 FT	8	9	8	4	6	5	6	30.4	24.0	28.8	5	7.5	5	6	34.8	53	65	5	9.5	0

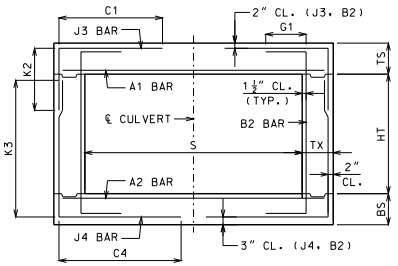

BAR DIMENSIONS DIAGRAM
SYMMETRICAL ABOUT ℄ CULVERT.

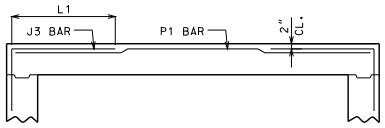

ALTERNATE J3 BAR

AT CONTRACTOR'S OPTION, ALTERNATE J3 BARS MAY BE USED WHEN THE DISTANCE BETWEEN THE ENDS OF J3 BARS IN THE TOP SLAB IS LESS THAN 2'-0". DIMENSION L1 (NOT C1) SHALL BE USED WITH ALTERNATE J3 BARS. WHERE L1 IS EQUAL TO 18", 22" AND 28" FOR #4, #5 AND #6 BARS, RESPECTIVELY. ADDITIONAL P1 BARS ARE REQUIRED WITH ALTERNATE J3 BARS WITH A LENGTH EQUAL TO A1 BARS, AND SIZE AND SPACING EQUAL TO J3 BARS. NO ADDITIONAL PAYMENT WILL BE MADE FOR THIS SUBSTITUTION.

GENERAL NOTES:

IF DESIGN FILL IS BETWEEN TABULATED DESIGN FILLS, USE THE NEXT GREATER TABULATED DESIGN FILL, EXCEPT FOR DESIGN FILLS BETWEEN 2 FEET AND 4 FEET. FOR DESIGN FILLS BETWEEN 2 FEET AND 4 FEET USE THE GREATER MEMBER THICKNESS, AREA OF REINFORCEMENT AND BAR DIMENSIONS FROM THE 2 FEET AND 4 FEET TABULATED DESIGN FILLS. AREA OF REINFORCEMENT EQUALS BAR AREA PER FOOT SPACING.

SPECIAL DESIGNS ARE REQUIRED WHEN THE DESIGN FILL IS LESS THAN 1 FOOT OR GREATER THAN 50 FEET.

DIMENSIONS ARE IN INCHES UNLESS OTHERWISE SPECIFIED.

DESIGN FILLS ARE MEASURED FROM THE TOP OF TOP SLAB TO THE TOP OF EARTH FILL OR ROADWAY.

CULVERTS MEET STRENGTH AND SERVICEABILITY REQUIREMENTS FOR THE DESIGN VEHICULAR LIVE LOAD HL-93 MINUS THE LANE LOAD.

MISSOURI HIGHWAYS AND TRANSPORTATION COMMISSION
105 WEST CAPITOL
JEFFERSON CITY, MO 65102
1-888-ASK-MODOT (1-888-275-6636)

STATE OF MISSOURI
DENNIS W. HECKMAN
NUMBER PE-27141
PROFESSIONAL ENGINEER
THIS SHEET HAS BEEN SIGNED, SEALED AND DATED ELECTRONICALLY.

CONCRETE SINGLE BOX CULVERT

MEMBER THICKNESS
BAR SIZE, SPACING & DIMENSIONS

SPAN (S): 3 FEET
HEIGHT (HT): 2 THRU 5 FEET

DATE EFFECTIVE: 04/01/2011
DATE PREPARED: 4/18/2011

703.17

SHEET NO.
1 OF 14

IF A SEAL IS PRESENT ON THIS SHEET IT HAS BEEN ELECTRONICALLY SEALED AND DATED.

SPAN (S) = 4 FT HEIGHT (HT) = 2 FT OR 3 FT																			
DESIGN FILL	MEMBER THICKNESS			TOP SLAB BARS							BOTTOM SLAB BARS								WALL BARS
				A1 BARS		J3 BARS					A2 BARS		J4 BARS					B2 BARS	
	TS	BS	TX	SIZE	SPA.	SIZE	SPA.	C1	K2 HT=2'	K2 HT=3'	SIZE	SPA.	SIZE	SPA.	C4	K3 HT=2'	K3 HT=3'	SIZE	SPA.	G1
1 FT	10	8	8	4	6	4	10.5	38.6	26.3	34.8	4	7	4	7	30.3	28	40	5	12	12
2 FT	10	8	8	4	6	4	10.5	38.6	26.3	34.8	4	7	4	7	28.0	28	40	5	12	12
4 FT	8	8	8	4	12	4	12	25.3	24.1	32.4	4	11	4	12	25.3	28	40	5	12	0
6 FT	8	8	8	4	12	4	12	24.6	24.1	32.4	4	12	4	12	24.6	28	40	5	12	0
8 FT	8	8	8	4	12	4	12	24.1	24.1	32.4	4	12	4	12	24.1	28	40	5	12	0
10 FT	8	8	8	4	12	4	12	23.0	24.1	32.4	4	12	4	12	23.0	28	40	5	12	0
12 FT	8	8	8	4	12	4	12	23.0	24.1	32.4	4	11	4	12	23.0	28	40	5	12	0
14 FT	8	8	8	4	11	4	12	23.0	24.1	32.4	4	9.5	4	11.5	23.0	28	40	5	12	0
16 FT	8	8	8	4	10	4	11	23.0	24.1	32.4	4	8.5	4	10	23.0	28	40	5	12	0
18 FT	8	8	8	4	8.5	4	10	23.0	24.1	32.4	4	7.5	4	9	22.4	28	40	5	12	0
20 FT	8	8	8	4	8	4	9	23.0	24.1	32.4	4	6.5	4	8	22.4	28	40	5	12	0
22 FT	8	8	8	4	7	4	8	23.0	24.1	32.4	4	6	4	7.5	22.4	28	40	5	12	0
24 FT	8	8	8	4	6.5	4	7.5	23.0	24.1	32.4	5	8.5	4	6.5	22.4	28	40	5	12	0
26 FT	8	8	8	4	6	4	7	23.0	24.1	32.4	5	8	4	6	22.4	28	40	5	12	0
28 FT	8	9	8	4	6	4	6.5	23.0	24.1	32.1	5	8	4	8	21.9	29	41	5	12	0
30 FT	8	9	8	4	6	4	6	23.0	24.1	32.1	5	7.5	4	7.5	21.9	29	41	5	12	0
32 FT	8	10	8	4	6	5	6.5	23.0	24.0	31.9	5	7.5	4	10	21.3	30	42	5	12	0
34 FT	9	10	8	5	8.5	4	7	22.4	25.1	33.0	5	7.5	4	9.5	21.3	30	42	5	12	0
36 FT	9	10	8	5	8.5	4	7	22.4	25.1	33.0	5	7	4	9	21.3	30	42	5	12	0
38 FT	9	11	8	5	8.5	4	6.5	22.4	25.4	33.1	5	7	4	10	20.8	31	43	5	12	0
40 FT	9	11	8	5	8.5	4	6	22.4	25.4	33.1	5	6.5	4	9.5	20.8	31	43	5	12	0
42 FT	10	11	8	5	8	4	7	21.9	26.0	33.8	5	6.5	4	9	21.3	31	43	5	12	0
44 FT	10	11	8	5	8	4	6.5	21.9	26.0	33.8	5	6.5	4	8.5	21.3	31	43	5	12	0
46 FT	10	12	8	5	8	4	6.5	21.9	26.3	33.9	5	6	4	9.5	20.8	32	44	5	12	0
48 FT	10	12	8	5	8	4	6	21.9	26.3	33.9	5	6	4	9.5	20.8	32	44	5	12	0
50 FT	11	12	8	5	7.5	4	7	21.3	27.3	35.1	5	6	4	9.5	21.3	32	44	5	12	0

SPAN (S) = 4 FT HEIGHT (HT) = 4 FT OR 5 FT																			
DESIGN FILL	MEMBER THICKNESS			TOP SLAB BARS							BOTTOM SLAB BARS								WALL BARS
				A1 BARS		J3 BARS					A2 BARS		J4 BARS					B2 BARS	
	TS	BS	TX	SIZE	SPA.	SIZE	SPA.	C1	K2 HT=4'	K2 HT=5'	SIZE	SPA.	SIZE	SPA.	C4	K3 HT=4'	K3 HT=5'	SIZE	SPA.	G1
1 FT	10	8	8	5	9	4	10.5	38.6	26.3	31.4	4	6	4	8	38.6	52	64	5	12	12
2 FT	10	8	8	5	9	4	10.5	38.6	26.3	31.4	4	6	4	7.5	38.6	52	64	5	12	12
4 FT	8	8	8	4	11.5	4	12	38.6	24.3	29.1	4	9.5	4	11.5	38.6	52	64	5	12	0
6 FT	8	8	8	4	12	4	12	35.9	24.3	29.1	4	11	4	11.5	35.3	52	64	5	12	0
8 FT	8	8	8	4	12	4	12	32.5	24.3	29.1	4	11	4	11	32.5	52	64	5	12	0
10 FT	8	8	8	4	12	4	12	28.0	24.3	29.1	4	11.5	4	11.5	28.0	52	64	5	12	0
12 FT	8	8	8	4	12	4	12	27.5	24.3	29.1	4	10	4	10.5	28.0	52	64	5	12	0
14 FT	8	8	8	4	10.5	4	12	27.5	24.3	29.1	4	9	4	10	27.5	52	64	5	12	0
16 FT	8	8	8	4	9.5	4	11	26.9	24.3	29.1	4	8	4	9.5	27.5	52	64	5	12	0
18 FT	8	8	8	4	8.5	4	9.5	26.9	24.3	29.1	4	7	4	8.5	27.5	52	64	5	12	0
20 FT	8	8	8	4	7.5	4	9	26.9	24.3	29.1	4	6.5	4	7.5	27.5	52	64	5	12	0
22 FT	8	8	8	4	7	4	8	26.9	24.3	29.1	4	6	4	7	27.5	52	64	5	12	0
24 FT	8	8	8	4	6	4	7.5	26.9	24.3	29.1	5	8.5	4	6.5	26.9	52	64	5	12	0
26 FT	8	8	8	4	6	4	6.5	26.9	24.3	29.1	5	8	4	6	26.9	52	64	5	12	0
28 FT	8	9	8	4	6	4	6	26.9	24.0	28.8	5	8	4	7.5	27.5	53	65	5	12	0
30 FT	8	9	8	4	6	4	6	26.9	24.0	28.8	5	7.5	4	7	27.5	53	65	5	12	0
32 FT	8	9	8	4	6	5	6.5	26.9	24.0	28.8	5	7.5	4	6.5	27.5	53	65	5	12	0
34 FT	9	10	8	5	8.5	4	6.5	26.9	25.4	30.4	5	7	4	7.5	28.0	54	66	5	12	0
36 FT	9	10	8	5	8.5	4	6	26.9	25.4	30.4	5	7	4	7	28.0	54	66	5	12	0
38 FT	9	10	8	5	8.5	5	7	26.9	25.4	30.4	5	7	4	7	28.0	54	66	5	12	0
40 FT	9	11	8	5	8.5	5	6.5	26.9	25.3	30.0	5	6.5	4	7	28.5	55	67	5	12	0
42 FT	10	11	8	5	8	5	7.5	27.5	26.3	31.1	5	6.5	4	6.5	28.5	55	67	5	12	0
44 FT	10	11	8	5	8	5	7.5	27.5	26.3	31.1	5	6.5	4	6	28.5	55	67	5	12	0
46 FT	10	11	8	5	8	5	7.5	27.5	26.3	31.1	5	6.5	4	6	28.5	55	67	5	12	0
48 FT	10	12	8	5	8	5	7.5	27.5	26.0	30.8	5	6	4	6	29.1	56	68	5	11.5	0
50 FT	11	12	8	5	7.5	5	8	28.0	27.0	32.0	5	6	4	6	29.1	56	68	5	11	0

SPAN (S) = 4 FT HEIGHT (HT) = 6 FT OR 7 FT																			
DESIGN FILL	MEMBER THICKNESS			TOP SLAB BARS							BOTTOM SLAB BARS								WALL BARS
				A1 BARS		J3 BARS					A2 BARS		J4 BARS					B2 BARS	
	TS	BS	TX	SIZE	SPA.	SIZE	SPA.	C1	K2 HT=6'	K2 HT=7'	SIZE	SPA.	SIZE	SPA.	C4	K3 HT=6'	K3 HT=7'	SIZE	SPA.	G1
1 FT	10	8	8	5	8.5	4	10.5	38.6	26.4	30.1	5	9	4	7	38.6	76	88	5	12	12
2 FT	10	8	8	5	8.5	4	10.5	38.6	26.4	30.1	5	8.5	4	6.5	38.6	76	88	5	12	12
4 FT	8	8	8	4	11	4	11	38.6	24.1	27.5	4	9	4	8	38.6	76	88	5	12	0
6 FT	8	8	8	4	12	4	11	38.6	24.1	27.5	4	10.5	4	7	38.6	76	88	5	12	0
8 FT	8	8	8	4	12	4	10	38.6	24.1	27.5	4	10.5	4	7	38.6	76	88	5	12	0
10 FT	8	8	8	4	12	4	11	38.6	24.1	27.5	4	11	4	7	38.6	76	88	5	12	0
12 FT	8	8	8	4	12	4	9.5	38.6	24.1	27.5	4	10	4	6.5	38.6	76	88	5	12	0
14 FT	8	8	8	4	10.5	4	8	38.6	24.1	27.5	4	8.5	4	6	38.6	76	88	5	12	0
16 FT	8	9	8	4	9.5	4	7	38.6	24.4	27.9	4	8.5	4	6.5	38.6	77	89	5	12	0
18 FT	8	9	8	4	8.5	4	6.5	38.6	24.4	27.9	4	7.5	4	6	38.6	77	89	5	12	0
20 FT	8	10	8	4	8	4	6	38.6	24.6	28.1	4	7.5	4	6	40.9	78	90	5	11.5	0
22 FT	8	10	9	4	7.5	4	6.5	40.5	24.6	28.1	4	7	4	7	39.9	78	90	5	11.5	0
24 FT	8	10	9	4	7	4	6	39.9	24.6	28.1	4	6.5	4	6.5	39.9	78	90	5	11	0
26 FT	8	10	9	4	6.5	5	6.5	39.4	24.6	28.1	4	6	4	6	39.9	78	90	5	10	0
28 FT	8	10	9	4	6	5	6	38.8	24.6	28.1	5	9	5	7	41.6	78	90	5	9.5	0
30 FT	8	10	9	4	6	6	7.5	41.0	24.6	28.1	5	8.5	5	6.5	41.6	78	90	5	9	0
32 FT	8	10	9	4	6	6	7	40.5	24.6	28.1	5	8	5	6	41.6	78	90	5	8.5	0
34 FT	9	11	9	5	8.5	5	6	41.6	26.1	29.8	5	8.5	5	6	41.6	79	91	5	8.5	0
36 FT	9	11	9	5	8.5	5	6	41.6	26.1	29.8	5	8	5	6	41.6	79	91	5	8.5	0
38 FT	9	11	9	5	8.5	5	6	41.6	26.1	29.8	5	7.5	6	7	43.9	79	91	5	8.5	0
40 FT	9	11	9	5	8.5	5	6	41.6	26.1	29.8	5	7	6	7	43.9	79	91	5	8.5	0
42 FT	10	11	9	5	8	5	6	41.6	30.8	35.0	5	7	6	6.5	43.9	79	91	5	8.5	0
44 FT	10	11	9	5	8	5	6	41.6	30.8	35.0	5	6.5	6	6.5	43.9	79	91	5	8.5	0
46 FT	10	11	10	5	8	5	6.5	42.9	26.4	30.0	5	6.5	5	6	42.9	79	91	5	8	0
48 FT	10	11	10	5	8	5	6.5	42.9	30.8	35.0	5	6	6	7.5	44.6	79	91	5	8	0
50 FT	11	12	11	5	7.5	5	7	44.3	27.9	31.6	5	6.5	5	7.5	43.6	80	92	5	7.5	0

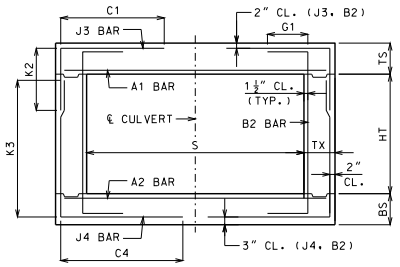

BAR DIMENSIONS DIAGRAM
SYMMETRICAL ABOUT ℄ CULVERT.

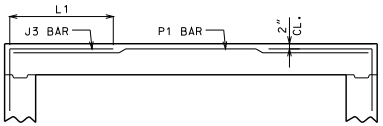

ALTERNATE J3 BAR

AT CONTRACTOR'S OPTION, ALTERNATE J3 BARS MAY BE USED WHEN THE DISTANCE BETWEEN THE ENDS OF J3 BARS IN THE TOP SLAB IS LESS THAN 2'-0". DIMENSION L1 (NOT C1) SHALL BE USED WITH ALTERNATE J3 BARS. WHERE L1 IS EQUAL TO 18", 22" AND 28" FOR #4, #5 AND #6 BARS, RESPECTIVELY. ADDITIONAL P1 BARS ARE REQUIRED WITH ALTERNATE J3 BARS WITH A LENGTH EQUAL TO A1 BARS, AND SIZE AND SPACING EQUAL TO J3 BARS. NO ADDITIONAL PAYMENT WILL BE MADE FOR THIS SUBSTITUTION.

GENERAL NOTES:

IF DESIGN FILL IS BETWEEN TABULATED DESIGN FILLS, USE THE NEXT GREATER TABULATED DESIGN FILL, EXCEPT FOR DESIGN FILLS BETWEEN 2 FEET AND 4 FEET. FOR DESIGN FILLS BETWEEN 2 FEET AND 4 FEET USE THE GREATER MEMBER THICKNESS, AREA OF REINFORCEMENT AND BAR DIMENSIONS FROM THE 2 FEET AND 4 FEET TABULATED DESIGN FILLS. AREA OF REINFORCEMENT EQUALS BAR AREA PER FOOT SPACING.

SPECIAL DESIGNS ARE REQUIRED WHEN THE DESIGN FILL IS LESS THAN 1 FOOT OR GREATER THAN 50 FEET.

DIMENSIONS ARE IN INCHES UNLESS OTHERWISE SPECIFIED.

DESIGN FILLS ARE MEASURED FROM THE TOP OF TOP SLAB TO THE TOP OF EARTH FILL OR ROADWAY.

CULVERTS MEET STRENGTH AND SERVICEABILITY REQUIREMENTS FOR THE DESIGN VEHICULAR LIVE LOAD HL-93 MINUS THE LANE LOAD.

MISSOURI HIGHWAYS AND TRANSPORTATION COMMISSION
105 WEST CAPITOL
JEFFERSON CITY, MO 65102
1-888-ASK-MODOT (1-888-275-6636)

DENNIS W. HECKMAN NUMBER PE-27141 STATE OF MISSOURI PROFESSIONAL ENGINEER
THIS SHEET HAS BEEN SIGNED, SEALED AND DATED ELECTRONICALLY.

CONCRETE SINGLE BOX CULVERT

MEMBER THICKNESS
BAR SIZE, SPACING & DIMENSIONS

SPAN (S): 4 FEET
HEIGHT (HT): 2 THRU 7 FEET

DATE EFFECTIVE: 04/01/2011
DATE PREPARED: 4/18/2011

703.17

SHEET NO.
2 OF 14

IF A SEAL IS PRESENT ON THIS SHEET IT HAS BEEN ELECTRONICALLY SEALED AND DATED.

SPAN (S) = 5 FT HEIGHT (HT) = 3 FT OR 4 FT

DESIGN FILL	MEMBER THICKNESS			TOP SLAB BARS							BOTTOM SLAB BARS							WALL BARS		
				A1 BARS		J3 BARS					A2 BARS		J4 BARS					B2 BARS		
	TS	BS	TX	SIZE	SPA.	SIZE	SPA.	C1	K2 HT=3′	K2 HT=4′	SIZE	SPA.	SIZE	SPA.	C4	K3 HT=3′	K3 HT=4′	SIZE	SPA.	G1
1 FT	10	8	8	5	8	4	10.5	44.9	26.5	33.0	5	8.5	4	6	35.4	40	52	5	12	12
2 FT	10	8	8	5	8	4	10.5	44.9	26.5	33.0	5	8	4	6	32.0	40	52	5	12	12
4 FT	8	8	8	4	8.5	4	10.5	28.5	24.5	30.6	4	7.5	4	10	28.5	40	52	5	12	0
6 FT	8	8	8	4	10	4	12	27.3	24.5	30.6	4	8	4	10	27.3	40	52	5	12	0
8 FT	8	8	8	4	9.5	4	11	26.5	24.5	30.6	4	8	4	9.5	26.5	40	52	5	12	0
10 FT	8	8	8	4	10	4	12	25.1	24.5	30.6	4	8.5	4	10.5	25.1	40	52	5	12	0
12 FT	8	8	8	4	8.5	4	10	25.1	24.5	30.6	4	7	4	9	25.1	40	52	5	12	0
14 FT	8	8	8	4	7.5	4	8.5	25.1	24.5	30.6	4	6	4	7.5	25.1	40	52	5	12	0
16 FT	8	8	8	4	6.5	4	7.5	25.1	24.5	30.6	5	8.5	4	7	25.1	40	52	5	12	0
18 FT	8	8	8	4	6	4	6.5	25.1	24.5	30.6	5	8	4	6	25.1	40	52	5	12	0
20 FT	8	8	8	4	6	4	6	25.1	24.5	30.6	5	8	5	6.5	25.1	40	52	5	12	0
22 FT	8	9	8	4	6	5	6.5	25.1	24.0	30.0	5	7.5	4	7	23.8	41	53	5	12	0
24 FT	8	9	8	4	6	5	6	25.1	24.0	30.0	5	7.5	4	6.5	23.8	41	53	5	12	0
26 FT	9	10	8	5	8.5	4	6.5	24.5	25.0	31.0	5	7	4	8.5	23.8	42	54	5	12	0
28 FT	9	10	8	5	8.5	4	6	24.5	25.0	31.0	5	7	4	8	23.8	42	54	5	12	0
30 FT	9	11	8	5	8	5	6.5	24.5	25.5	31.5	5	6.5	4	9	23.1	43	55	5	12	0
32 FT	10	11	8	5	8	4	6	23.8	26.0	32.0	5	6.5	4	8	23.1	43	55	5	12	0
34 FT	10	12	8	5	7.5	5	7.5	23.8	26.5	32.5	5	6	4	9	22.5	44	56	5	12	0
36 FT	10	12	8	5	7	5	7.5	23.8	26.5	32.5	5	6	4	8.5	22.5	44	56	5	12	0
38 FT	11	12	8	5	7	4	6	23.8	27.0	33.0	5	6	4	8	23.1	44	56	5	12	0
40 FT	11	13	8	5	6.5	5	8.5	23.8	27.5	33.5	5	6	4	8.5	22.5	45	57	5	12	0
42 FT	12	13	8	5	6.5	4	6	23.1	28.0	34.0	5	6	4	8	23.1	45	57	5	12	0
44 FT	12	13	8	5	6.5	5	9	23.1	28.0	34.0	5	6	4	7.5	23.1	45	57	5	12	0
46 FT	12	14	8	5	6	5	8.5	23.8	28.5	34.5	6	8	4	7.5	22.5	46	58	5	12	0
48 FT	13	14	8	5	6	4	6	23.1	29.0	35.0	6	8	4	7.5	23.1	46	58	5	12	0
50 FT	13	14	8	5	6	5	8.5	23.1	29.0	35.0	6	8	4	7.5	23.1	46	58	5	12	0

SPAN (S) = 5 FT HEIGHT (HT) = 5 FT OR 6 FT

DESIGN FILL	MEMBER THICKNESS			TOP SLAB BARS							BOTTOM SLAB BARS							WALL BARS		
				A1 BARS		J3 BARS					A2 BARS		J4 BARS					B2 BARS		
	TS	BS	TX	SIZE	SPA.	SIZE	SPA.	C1	K2 HT=5′	K2 HT=6′	SIZE	SPA.	SIZE	SPA.	C4	K3 HT=5′	K3 HT=6′	SIZE	SPA.	G1
1 FT	10	8	8	5	8	4	10.5	44.9	26.3	30.6	5	8	4	6	44.9	64	76	5	12	12
2 FT	10	8	8	5	8	4	10.5	44.9	26.3	30.6	5	8	4	6	44.9	64	76	5	12	12
4 FT	8	8	8	4	8	4	11	44.9	24.1	28.3	4	7	4	8.5	44.9	64	76	5	12	0
6 FT	8	8	8	4	9	4	10.5	39.5	24.1	28.3	4	7.5	4	8	38.1	64	76	5	12	0
8 FT	8	8	8	4	9	4	10	34.6	24.1	28.3	4	7	4	7.5	34.6	64	76	5	12	0
10 FT	8	8	8	4	9.5	4	11	30.6	24.1	28.3	4	8	4	8	30.6	64	76	5	12	0
12 FT	8	8	8	4	8	4	9	29.9	24.1	28.3	4	6.5	4	7.5	30.6	64	76	5	12	0
14 FT	8	8	8	4	7	4	8	29.9	24.1	28.3	4	6	4	6.5	29.9	64	76	5	12	0
16 FT	8	8	8	4	6	4	7	29.3	24.1	28.3	5	8	4	6	29.9	64	76	5	12	0
18 FT	8	8	8	4	6	4	6	29.3	24.1	28.3	5	8	5	6.5	29.9	64	76	5	12	0
20 FT	8	8	8	4	6	5	6.5	29.3	24.1	28.3	5	8	5	6	29.9	64	76	5	12	0
22 FT	8	9	8	4	6	5	6	29.3	24.5	28.5	5	7.5	4	6	29.9	65	77	5	12	0
24 FT	8	9	8	5	9	6	7.5	32.0	28.1	32.8	5	7.5	5	6.5	29.9	65	77	5	12	0
26 FT	9	10	8	5	8.5	5	6.5	29.3	25.1	29.3	5	7	4	6	30.6	66	78	5	12	0
28 FT	9	10	8	5	8	5	6.5	29.3	25.1	29.3	5	7	5	7	29.9	66	78	5	12	0
30 FT	9	10	8	5	7.5	5	6.5	29.3	29.6	34.4	5	6.5	5	6.5	29.9	66	78	5	12	0
32 FT	10	11	8	5	7.5	5	7	29.3	26.6	30.8	5	6.5	5	7.5	30.6	67	79	5	12	0
34 FT	10	11	8	5	7.5	5	6.5	29.3	26.6	30.8	5	6.5	5	7	30.6	67	79	5	11.5	0
36 FT	10	11	8	5	7	5	6.5	29.3	30.4	35.3	5	6	5	6	30.6	67	79	5	11	0
38 FT	11	12	8	5	7	5	7	29.9	27.3	31.5	5	6	5	7	31.3	68	80	5	10	0
40 FT	11	12	8	5	6.5	5	6.5	29.9	31.3	36.0	5	6	5	6.5	31.3	68	80	5	10	0
42 FT	11	13	8	5	6.5	5	6	29.9	27.6	31.9	5	6	5	7	31.3	69	81	5	9.5	0
44 FT	12	13	8	5	6.5	5	6.5	29.9	28.0	32.3	5	6	5	6.5	32.0	69	81	5	9.5	0
46 FT	12	13	8	5	6	5	6	29.9	32.0	36.8	5	6	5	6	31.3	69	81	5	9.5	0
48 FT	12	14	9	5	6	5	7	30.4	28.4	32.5	6	8	5	8	31.8	70	82	5	9.5	0
50 FT	13	14	9	5	6	5	7.5	30.4	29.5	33.9	6	8	5	7.5	32.4	70	82	5	9	0

SPAN (S) = 5 FT HEIGHT (HT) = 7 FT OR 8 FT

DESIGN FILL	MEMBER THICKNESS			TOP SLAB BARS							BOTTOM SLAB BARS							WALL BARS		
				A1 BARS		J3 BARS					A2 BARS		J4 BARS					B2 BARS		
	TS	BS	TX	SIZE	SPA.	SIZE	SPA.	C1	K2 HT=7′	K2 HT=8′	SIZE	SPA.	SIZE	SPA.	C4	K3 HT=7′	K3 HT=8′	SIZE	SPA.	G1
1 FT	10	9	8	5	8	4	9.5	44.9	26.5	29.8	5	7.5	4	7	44.9	89	101	5	12	12
2 FT	10	9	8	5	8	4	8.5	44.9	26.5	29.8	5	7.5	4	6.5	44.9	89	101	5	12	12
4 FT	8	8	8	4	7.5	4	7.5	44.9	24.8	27.9	4	6.5	4	6	44.9	88	100	5	12	0
6 FT	8	9	8	4	9	4	7.5	44.9	24.0	27.0	4	7.5	4	6.5	44.9	89	101	5	12	0
8 FT	8	9	8	4	9	4	7	44.9	24.0	27.0	4	7.5	4	6	44.9	89	101	5	12	0
10 FT	8	9	8	4	10	4	7.5	44.9	24.0	27.0	4	8	4	6.5	44.9	89	101	5	12	0
12 FT	8	10	8	4	8.5	4	6.5	44.9	24.3	27.3	4	8	4	6.5	44.9	90	102	5	12	0
14 FT	8	10	9	4	7.5	4	6.5	41.4	24.3	27.3	4	7	4	7	45.5	90	102	5	12	0
16 FT	8	10	9	4	6.5	4	6	40.8	24.3	27.3	4	6	4	6.5	45.5	90	102	5	11.5	0
18 FT	8	10	9	4	6	5	6.5	40.0	24.3	27.3	5	9	4	6	45.5	90	102	5	10.5	0
20 FT	8	10	9	4	6	5	6	39.4	25.3	28.4	5	8	5	6.5	47.6	90	102	5	10	0
22 FT	8	10	9	4	6	6	7	42.1	25.3	28.4	5	7.5	5	6	47.6	90	102	5	9	0
24 FT	9	11	9	5	8.5	5	6	41.4	26.8	30.0	5	7.5	5	6	47.6	91	103	5	8.5	0
26 FT	9	11	9	5	8.5	5	6	41.4	26.8	30.0	5	7	6	7.5	49.6	91	103	5	8.5	0
28 FT	9	11	9	5	8.5	5	6	41.4	29.8	33.3	5	6.5	6	7	49.6	91	103	5	8.5	0
30 FT	9	11	9	5	8	5	6	40.8	29.8	33.3	5	6.5	6	6.5	49.6	91	103	5	8.5	0
32 FT	10	11	9	5	8	5	6	46.3	30.0	33.6	5	6.5	6	6	49.6	91	103	5	8.5	0
34 FT	10	11	9	5	7.5	5	6	45.5	30.0	33.6	5	6	6	6	49.6	91	103	5	8.5	0
36 FT	10	12	10	5	7	5	6.5	40.6	30.3	33.9	5	6	5	6	49.0	92	104	5	8	0
38 FT	11	12	10	5	7.5	5	6	43.4	31.6	35.4	5	6	6	7	51.1	92	104	5	8	0
40 FT	11	12	11	5	7.5	5	7	41.1	31.6	35.4	5	6	5	6.5	49.8	92	104	5	7.5	0
42 FT	11	13	11	5	7	5	7	41.1	31.9	35.6	5	6	5	6.5	49.8	93	105	5	7.5	0
44 FT	12	13	11	5	7	5	6.5	43.3	32.3	36.0	5	6	5	6	49.8	93	105	5	7.5	0
46 FT	12	13	11	5	7	5	6	43.3	32.3	36.0	5	6	5	6	49.8	93	105	5	7.5	0
48 FT	12	14	12	5	6.5	5	6.5	41.0	32.5	36.3	6	8	5	6.5	51.1	94	106	5	7	0
50 FT	13	14	12	5	6.5	5	6.5	43.3	33.9	37.8	6	8	5	6.5	51.1	94	106	5	7	0

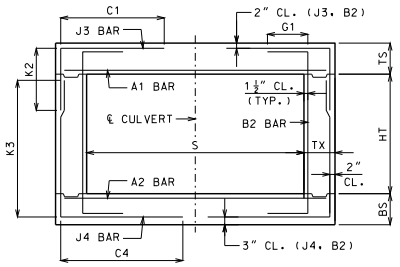

BAR DIMENSIONS DIAGRAM
SYMMETRICAL ABOUT ℄ CULVERT.

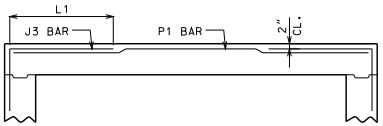

ALTERNATE J3 BAR

AT CONTRACTOR'S OPTION, ALTERNATE J3 BARS MAY BE USED WHEN THE DISTANCE BETWEEN THE ENDS OF J3 BARS IN THE TOP SLAB IS LESS THAN 2′-0″. DIMENSION L1 (NOT C1) SHALL BE USED WITH ALTERNATE J3 BARS. WHERE L1 IS EQUAL TO 18″, 22″ AND 28″ FOR #4, #5 AND #6 BARS, RESPECTIVELY. ADDITIONAL P1 BARS ARE REQUIRED WITH ALTERNATE J3 BARS WITH A LENGTH EQUAL TO A1 BARS, AND SIZE AND SPACING EQUAL TO J3 BARS. NO ADDITIONAL PAYMENT WILL BE MADE FOR THIS SUBSTITUTION.

GENERAL NOTES:

IF DESIGN FILL IS BETWEEN TABULATED DESIGN FILLS, USE THE NEXT GREATER TABULATED DESIGN FILL, EXCEPT FOR DESIGN FILLS BETWEEN 2 FEET AND 4 FEET. FOR DESIGN FILLS BETWEEN 2 FEET AND 4 FEET USE THE GREATER MEMBER THICKNESS, AREA OF REINFORCEMENT AND BAR DIMENSIONS FROM THE 2 FEET AND 4 FEET TABULATED DESIGN FILLS. AREA OF REINFORCEMENT EQUALS BAR AREA PER FOOT SPACING.

SPECIAL DESIGNS ARE REQUIRED WHEN THE DESIGN FILL IS LESS THAN 1 FOOT OR GREATER THAN 50 FEET.

DIMENSIONS ARE IN INCHES UNLESS OTHERWISE SPECIFIED.

DESIGN FILLS ARE MEASURED FROM THE TOP OF TOP SLAB TO THE TOP OF EARTH FILL OR ROADWAY.

CULVERTS MEET STRENGTH AND SERVICEABILITY REQUIREMENTS FOR THE DESIGN VEHICULAR LIVE LOAD HL-93 MINUS THE LANE LOAD.

MISSOURI HIGHWAYS AND TRANSPORTATION COMMISSION
105 WEST CAPITOL
JEFFERSON CITY, MO 65102
1-888-ASK-MODOT (1-888-275-6636)

STATE OF MISSOURI
DENNIS W. HECKMAN
NUMBER PE-27141
PROFESSIONAL ENGINEER
THIS SHEET HAS BEEN SIGNED, SEALED AND DATED ELECTRONICALLY.

CONCRETE SINGLE BOX CULVERT

MEMBER THICKNESS
BAR SIZE, SPACING & DIMENSIONS

SPAN (S): 5 FEET
HEIGHT (HT): 3 THRU 8 FEET

DATE EFFECTIVE: 04/01/2011
DATE PREPARED: 4/18/2011

703.17

SHEET NO.
3 OF 14

IF A SEAL IS PRESENT ON THIS SHEET IT HAS BEEN ELECTRONICALLY SEALED AND DATED.

SPAN (S) = 6 FT HEIGHT (HT) = 3 FT OR 4 FT OR 5 FT

DESIGN FILL	MEMBER THICKNESS			TOP SLAB BARS									BOTTOM SLAB BARS									WALL BARS		
				A1 BARS		J3 BARS							A2 BARS		J4 BARS							B2 BARS		
	TS	BS	TX	SIZE	SPA.	SIZE	SPA.	C1	K2				SIZE	SPA.	SIZE	SPA.	C4	K3				SIZE	SPA.	G1
									HT=3'	HT=4'	HT=5'							HT=3'	HT=4'	HT=5'				
1 FT	10	8	8	5	8	4	9	51.3	26.5	33.0	39.4		5	8	5	6	41.6	40	52	64		5	12	12
2 FT	11	8	8	5	7.5	4	9.5	51.3	27.0	33.5	40.0		5	8	6	7.5	36.0	40	52	64		5	12	12
4 FT	8	8	8	4	6.5	4	7.5	32.8	24.5	30.6	36.9		5	8.5	4	6.5	32.0	40	52	64		5	12	0
6 FT	8	8	8	4	7	4	8	30.4	24.5	30.6	36.9		5	9	4	7	30.4	40	52	64		5	12	0
8 FT	8	8	8	4	6.5	4	7.5	29.6	24.5	30.6	36.9		5	8.5	4	6.5	29.6	40	52	64		5	12	0
10 FT	8	8	8	4	7	4	8	27.3	24.5	30.6	36.9		4	6	4	7	27.3	40	52	64		5	12	0
12 FT	8	8	8	4	6	4	7	27.3	24.5	30.6	36.9		5	8	4	6	27.3	40	52	64		5	12	0
14 FT	8	8	8	4	6	4	6	27.3	24.5	30.6	36.9		5	8	5	6	27.3	40	52	64		5	12	0
16 FT	8	8	8	4	6	5	6	27.3	28.3	35.4	42.6		5	8	6	7	30.4	40	52	64		5	12	0
18 FT	8	9	8	5	8.5	6	7.5	30.4	24.0	30.0	36.0		5	7.5	4	6	26.4	41	53	65		5	12	0
20 FT	8	9	8	5	7.5	6	7.5	30.4	28.4	35.4	42.5		5	7	5	6.5	26.4	41	53	65		5	12	0
22 FT	9	10	8	5	7.5	5	6.5	26.4	25.0	31.0	37.0		5	7	4	6.5	25.6	42	54	66		5	12	0
24 FT	9	11	8	5	7	5	6.5	26.4	25.5	31.5	37.5		5	6.5	4	7	24.8	43	55	67		5	12	0
26 FT	10	11	8	5	7	5	7.5	26.4	26.0	32.0	38.0		5	6.5	4	6.5	25.6	43	55	67		5	12	0
28 FT	10	12	8	5	6.5	5	7.5	26.4	26.5	32.5	38.5		5	6	4	7	24.8	44	56	68		5	12	0
30 FT	11	12	8	5	6.5	5	8.5	25.6	27.0	33.0	39.0		5	6	4	6	24.8	44	56	68		5	12	0
32 FT	11	13	8	5	6	5	8	25.6	27.5	33.5	39.5		5	6	4	7	24.8	45	57	69		5	12	0
34 FT	12	13	8	5	6	5	8.5	25.6	28.0	34.0	40.0		5	6	4	6	24.8	45	57	69		5	12	0
36 FT	12	14	8	6	8	5	8.5	25.6	28.5	34.5	40.5		6	8	4	6.5	24.8	46	58	70		5	12	0
38 FT	13	14	8	6	8	5	8.5	24.8	29.0	35.0	41.0		6	8	4	6	24.8	46	58	70		5	12	0
40 FT	13	14	8	6	7.5	5	8.5	24.8	29.0	35.0	41.0		6	7.5	5	9	24.8	46	58	70		5	12	0
42 FT	14	15	8	6	8	5	8.5	24.8	30.0	36.0	42.0		6	7.5	4	6	24.8	47	59	71		5	12	0
44 FT	14	15	8	6	7.5	5	8.5	24.8	30.0	36.0	42.0		6	7.5	5	8.5	24.8	47	59	71		5	12	0
46 FT	14	16	8	6	7	5	8.5	24.8	30.5	36.5	42.5		6	7	4	6	24.8	48	60	72		5	12	0
48 FT	15	16	8	6	7	5	8	29.6	31.0	37.0	43.0		6	7	5	8	25.6	48	60	72		5	12	0
50 FT	15	16	8	6	7	5	8	29.6	31.0	37.0	43.0		6	7	5	8	24.8	48	60	72		5	12	0

SPAN (S) = 6 FT HEIGHT (HT) = 6 FT OR 7 FT

DESIGN FILL	MEMBER THICKNESS			TOP SLAB BARS									BOTTOM SLAB BARS									WALL BARS		
				A1 BARS		J3 BARS							A2 BARS		J4 BARS							B2 BARS		
	TS	BS	TX	SIZE	SPA.	SIZE	SPA.	C1	K2				SIZE	SPA.	SIZE	SPA.	C4	K3				SIZE	SPA.	G1
									HT=6'	HT=7'								HT=6'	HT=7'					
1 FT	10	8	8	5	8	4	9.5	51.3	26.4	30.1			5	8	5	6	52.8	76	88			5	12	12
2 FT	11	9	8	5	7.5	4	9.5	51.3	27.9	31.6			5	7.5	4	6.5	51.3	77	89			5	12	12
4 FT	8	8	8	4	6	4	7	51.3	24.1	27.5			5	8	4	6	51.3	76	88			5	12	0
6 FT	8	8	8	4	6.5	4	7.5	42.4	24.1	27.5			5	8	4	6	41.6	76	88			5	12	0
8 FT	8	8	8	4	6.5	4	7	38.4	24.1	27.5			5	8	5	6.5	38.4	76	88			5	12	0
10 FT	8	8	8	4	7	4	7.5	32.8	24.1	27.5			5	8.5	4	6	33.6	76	88			5	12	0
12 FT	8	9	8	4	6	4	6	32.8	24.4	27.9			5	8	4	7	33.6	77	89			5	12	0
14 FT	8	9	8	4	6	5	6.5	32.0	24.4	27.9			5	7.5	4	6	32.8	77	89			5	12	0
16 FT	8	9	8	4	6	6	7.5	35.3	28.5	32.6			5	7.5	5	6.5	32.8	77	89			5	12	0
18 FT	8	9	8	5	8.5	6	7.5	34.4	28.5	32.6			5	7.5	6	7.5	35.3	77	89			5	12	0
20 FT	8	9	8	5	7.5	6	7.5	34.4	28.5	32.6			5	6.5	6	7	35.3	77	89			5	12	0
22 FT	9	10	8	5	7.5	5	6	32.0	25.8	29.4			5	7	5	6	32.8	78	90			5	12	0
24 FT	9	11	8	5	7	6	7	34.4	29.6	33.6			5	6.5	5	6.5	32.8	79	91			5	12	0
26 FT	10	11	8	5	6.5	5	6	32.0	30.8	35.0			5	6.5	5	6	32.8	79	91			5	11	0
28 FT	10	12	8	5	6.5	6	7	34.4	30.3	34.4			5	6	5	6.5	33.6	80	92			5	10.5	0
30 FT	11	12	8	5	6.5	5	6	32.0	31.5	35.8			5	6	5	6	33.6	80	92			5	9.5	0
32 FT	11	13	8	5	6	6	7	35.3	31.9	36.0			5	6	5	6	33.6	81	93			5	9.5	0
34 FT	11	13	8	6	7.5	6	6.5	35.3	31.9	36.0			5	6	5	6	33.6	81	93			5	9.5	0
36 FT	12	13	8	6	8	6	7	35.3	32.3	36.4			6	8	6	7	36.8	81	93			5	9.5	0
38 FT	12	14	8	6	8	6	6.5	35.3	32.5	36.8			6	8	5	6	34.4	82	94			5	9.5	0
40 FT	13	14	9	6	8	5	6	32.4	33.9	38.1			6	8	5	6.5	34.0	82	94			5	8.5	0
42 FT	13	15	10	6	8	5	7	32.8	33.3	37.5			6	7.5	5	7.5	34.5	83	95			5	9	0
44 FT	14	15	10	6	8	5	7.5	32.8	34.5	38.9			6	7.5	5	7.5	34.5	83	95			5	8.5	0
46 FT	14	16	11	6	7.5	5	7	33.3	34.9	39.3			6	7	5	7	34.9	84	96			5	9	0
48 FT	14	16	11	6	7.5	5	6.5	33.3	34.9	39.3			6	7	5	7	34.9	84	96			5	9	0
50 FT	15	16	11	6	7.5	5	7	38.1	35.3	39.6			6	7	5	7	34.9	84	96			5	8.5	0

SPAN (S) = 6 FT HEIGHT (HT) = 8 FT OR 9 FT

DESIGN FILL	MEMBER THICKNESS			TOP SLAB BARS							BOTTOM SLAB BARS							WALL BARS		
				A1 BARS		J3 BARS					A2 BARS		J4 BARS					B2 BARS		
	TS	BS	TX	SIZE	SPA.	SIZE	SPA.	C1	K2		SIZE	SPA.	SIZE	SPA.	C4	K3		SIZE	SPA.	G1
									HT=8'	HT=9'						HT=8'	HT=9'			
1 FT	10	10	8	5	8	4	7	51.3	26.6	29.5	5	7	4	6.5	51.3	102	114	5	12	12
2 FT	11	10	8	5	7.5	4	7	51.3	28.0	31.0	5	7	4	6	51.3	102	114	5	12	12
4 FT	8	9	9	4	6	4	6.5	51.9	24.9	27.6	5	8	4	6.5	51.9	101	113	5	12	0
6 FT	8	9	9	4	6.5	4	6.5	51.9	24.9	27.6	5	8.5	4	6	51.9	101	113	5	12	0
8 FT	8	10	9	4	6.5	4	6	51.9	25.1	27.9	4	6	4	6	51.9	102	114	5	11.5	0
10 FT	8	10	9	4	7.5	4	6.5	45.4	25.1	27.9	4	6.5	4	6.5	51.9	102	114	5	12	0
12 FT	8	10	9	4	6	5	6.5	43.8	25.1	27.9	5	8.5	4	6	51.9	102	114	5	11.5	0
14 FT	8	10	9	4	6	5	6	42.1	26.1	29.0	5	7.5	5	6.5	54.3	102	114	5	10	0
16 FT	8	10	9	4	6	6	7	44.5	28.4	31.5	5	7	5	6	54.3	102	114	5	9.5	0
18 FT	8	10	9	5	9	6	7	43.8	29.4	32.6	5	7	6	7	55.9	102	114	5	8.5	0
20 FT	9	10	9	5	8.5	5	6	43.8	29.8	33.0	5	7	6	6.5	56.8	102	114	5	8.5	0
22 FT	9	11	9	5	8	5	6	42.9	30.0	33.3	5	6.5	6	6.5	55.9	103	115	5	8.5	0
24 FT	10	11	9	5	7.5	5	6	45.4	30.3	33.5	5	6.5	6	6	55.9	103	115	5	8.5	0
26 FT	10	11	9	5	7	5	6	44.5	30.3	33.5	5	6	6	6	55.9	103	115	5	8.5	0
28 FT	10	12	9	5	6.5	6	7	47.0	31.6	35.0	5	6	6	6	55.9	104	116	5	8	0
30 FT	11	12	9	5	6.5	6	6.5	49.4	35.4	39.0	5	6	6	6	55.9	104	116	5	8	0
32 FT	11	13	10	5	6.5	6	8	46.8	32.3	35.5	5	6	6	6.5	56.6	105	117	5	8	0
34 FT	12	13	11	5	6.5	5	6.5	44.0	32.5	35.9	5	6	5	6	49.8	105	117	5	7.5	0
36 FT	12	13	11	5	6	5	6.5	44.0	32.5	35.9	6	8	6	7.5	52.3	105	117	5	7.5	0
38 FT	12	14	12	5	6	5	6	42.0	32.8	36.1	6	8	5	6	48.8	106	118	5	7	0
40 FT	13	14	12	5	6	5	6	44.5	33.0	36.4	6	8	5	6	48.8	106	118	5	7	0
42 FT	13	15	12	5	6	5	6	43.6	33.4	36.6	6	7.5	5	6	52.1	107	119	5	7	0
44 FT	14	15	13	5	6	5	6	44.3	34.8	38.3	6	7.5	5	6	48.5	107	119	5	6.5	0
46 FT	14	15	13	6	8	5	6	44.3	34.8	38.3	6	7.5	6	8	51.0	107	119	5	6.5	0
48 FT	14	16	13	6	8	5	6	44.3	35.1	38.6	6	7	5	6	50.1	108	120	5	6.5	0
50 FT	15	16	13	6	8	5	6	51.0	35.4	38.9	6	7	6	8	53.5	108	120	5	6.5	0

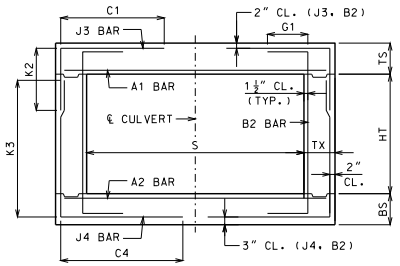

BAR DIMENSIONS DIAGRAM
SYMMETRICAL ABOUT ℄ CULVERT.

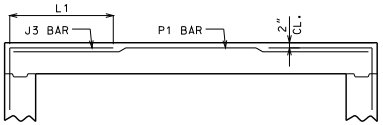

ALTERNATE J3 BAR

AT CONTRACTOR'S OPTION, ALTERNATE J3 BARS MAY BE USED WHEN THE DISTANCE BETWEEN THE ENDS OF J3 BARS IN THE TOP SLAB IS LESS THAN 2'-0". DIMENSION L1 (NOT C1) SHALL BE USED WITH ALTERNATE J3 BARS. WHERE L1 IS EQUAL TO 18", 22" AND 28" FOR #4, #5 AND #6 BARS, RESPECTIVELY. ADDITIONAL P1 BARS ARE REQUIRED WITH ALTERNATE J3 BARS WITH A LENGTH EQUAL TO A1 BARS, AND SIZE AND SPACING EQUAL TO J3 BARS. NO ADDITIONAL PAYMENT WILL BE MADE FOR THIS SUBSTITUTION.

GENERAL NOTES:

IF DESIGN FILL IS BETWEEN TABULATED DESIGN FILLS, USE THE NEXT GREATER TABULATED DESIGN FILL, EXCEPT FOR DESIGN FILLS BETWEEN 2 FEET AND 4 FEET. FOR DESIGN FILLS BETWEEN 2 FEET AND 4 FEET USE THE GREATER MEMBER THICKNESS, AREA OF REINFORCEMENT AND BAR DIMENSIONS FROM THE 2 FEET AND 4 FEET TABULATED DESIGN FILLS. AREA OF REINFORCEMENT EQUALS BAR AREA PER FOOT SPACING.

SPECIAL DESIGNS ARE REQUIRED WHEN THE DESIGN FILL IS LESS THAN 1 FOOT OR GREATER THAN 50 FEET.

DIMENSIONS ARE IN INCHES UNLESS OTHERWISE SPECIFIED.

DESIGN FILLS ARE MEASURED FROM THE TOP OF TOP SLAB TO THE TOP OF EARTH FILL OR ROADWAY.

CULVERTS MEET STRENGTH AND SERVICEABILITY REQUIREMENTS FOR THE DESIGN VEHICULAR LIVE LOAD HL-93 MINUS THE LANE LOAD.

MISSOURI HIGHWAYS AND TRANSPORTATION COMMISSION
105 WEST CAPITOL
JEFFERSON CITY, MO 65102
1-888-ASK-MODOT (1-888-275-6636)

STATE OF MISSOURI
DENNIS W. HECKMAN
NUMBER PE-27141
PROFESSIONAL ENGINEER
THIS SHEET HAS BEEN SIGNED, SEALED AND DATED ELECTRONICALLY.

CONCRETE SINGLE BOX CULVERT

MEMBER THICKNESS
BAR SIZE, SPACING & DIMENSIONS

SPAN (S): 6 FEET
HEIGHT (HT): 3 THRU 9 FEET

DATE EFFECTIVE: 04/01/2011
DATE PREPARED: 4/18/2011

703.17

SHEET NO.
4 OF 14

IF A SEAL IS PRESENT ON THIS SHEET IT HAS BEEN ELECTRONICALLY SEALED AND DATED.

SPAN (S) = 7 FT HEIGHT (HT) = 4 FT OR 5 FT OR 6 FT

DESIGN FILL	MEMBER THICKNESS			TOP SLAB BARS								BOTTOM SLAB BARS								WALL BARS		
				A1 BARS		J3 BARS						A2 BARS		J4 BARS						B2 BARS		
	TS	BS	TX	SIZE	SPA.	SIZE	SPA.	C1	K2			SIZE	SPA.	SIZE	SPA.	C4	K3			SIZE	SPA.	G1
									HT=4′	HT=5′	HT=6′						HT=4′	HT=5′	HT=6′			
1 FT	11	9	8	5	7.5	4	9	57.0	27.1	32.3	37.4	5	7.5	4	6	54.3	53	65	77	5	12	12
2 FT	11	9	8	5	7.5	4	9	57.0	27.1	32.3	37.4	5	7.5	5	7	43.3	53	65	77	5	12	12
4 FT	8	8	8	4	6	4	6	36.8	24.3	29.1	34.0	5	8	5	6	35.9	52	64	76	5	12	0
6 FT	8	8	8	4	6	4	6	33.1	24.3	29.1	34.0	5	8	5	6	33.1	52	64	76	5	12	0
8 FT	8	9	8	4	6	5	6.5	32.3	24.0	28.8	33.6	5	7.5	4	6.5	32.3	53	65	77	5	12	0
10 FT	8	9	8	4	6	4	6	30.4	24.0	28.8	33.6	5	7.5	4	7.5	29.5	53	65	77	5	12	0
12 FT	8	9	8	4	6	5	6	30.4	24.0	28.8	33.6	5	7.5	4	6	28.5	53	65	77	5	12	0
14 FT	8	9	8	5	8	6	7.5	33.1	28.3	33.9	39.5	5	7	5	6.5	28.5	53	65	77	5	12	0
16 FT	8	9	8	5	7	6	7	33.1	28.3	33.9	39.5	5	6.5	6	7.5	31.3	53	65	77	5	12	0
18 FT	9	10	8	5	7	5	6.5	28.5	25.4	30.4	35.3	5	6	5	7	28.5	54	66	78	5	12	0
20 FT	9	10	8	5	6	5	6	28.5	29.1	34.8	40.4	6	8	5	6	27.6	54	66	78	5	12	0
22 FT	10	11	8	5	6	5	7	28.5	26.3	31.1	36.1	6	8	5	7.5	27.6	55	67	79	5	12	0
24 FT	10	12	8	6	8	5	6	28.5	26.0	30.8	35.6	6	8	5	8.5	26.6	56	68	80	5	12	0
26 FT	11	13	8	6	8	5	7	27.6	27.5	32.4	37.3	6	8	5	8.5	26.6	57	69	81	5	12	0
28 FT	12	13	8	6	7.5	5	8	27.6	28.5	33.6	38.6	6	7.5	5	8.5	27.6	57	69	81	5	12	0
30 FT	12	14	8	6	7.5	5	7	27.6	28.3	33.3	38.1	6	7.5	5	8.5	26.6	58	70	82	5	12	0
32 FT	13	14	8	6	7	5	8	26.6	29.4	34.5	39.5	6	7	5	8.5	27.6	58	70	82	5	12	0
34 FT	13	15	8	6	7	5	7	27.6	29.1	34.0	39.0	6	7	5	8.5	26.6	59	71	83	5	12	0
36 FT	14	15	8	6	6.5	5	7.5	26.6	30.3	35.3	40.4	6	7	5	8.5	27.6	59	71	83	5	12	0
38 FT	14	16	8	6	6.5	5	7	26.6	30.6	35.8	40.8	6	7	5	8	26.6	60	72	84	5	11.5	0
40 FT	15	16	8	6	6.5	5	7.5	32.3	31.1	36.1	41.1	6	6.5	5	8	27.6	60	72	84	5	10.5	0
42 FT	15	17	8	6	6	5	7	32.3	35.3	40.9	46.5	6	6.5	5	7	27.6	61	73	85	5	10	0
44 FT	16	17	8	6	6	5	7	32.3	36.5	42.3	48.0	6	6.5	5	7	27.6	61	73	85	5	9.5	0
46 FT	16	18	8	6	6	5	6	32.3	36.3	41.9	47.5	6	6.5	5	6.5	27.6	62	74	86	5	9.5	0
48 FT	17	18	9	6	6	5	7.5	32.5	33.5	38.8	43.9	6	6.5	5	8	27.9	62	74	86	5	10	0
50 FT	17	19	9	6	6	5	7	32.5	37.1	42.8	48.4	6	6	5	7.5	27.9	63	75	87	5	9	0

SPAN (S) = 7 FT HEIGHT (HT) = 7 FT OR 8 FT

DESIGN FILL	MEMBER THICKNESS			TOP SLAB BARS							BOTTOM SLAB BARS								WALL BARS		
				A1 BARS		J3 BARS					A2 BARS		J4 BARS						B2 BARS		
	TS	BS	TX	SIZE	SPA.	SIZE	SPA.	C1	K2		SIZE	SPA.	SIZE	SPA.	C4	K3		SIZE	SPA.	G1
									HT=7′	HT=8′						HT=7′	HT=8′			
1 FT	11	9	8	5	7.5	4	8	57.0	27.8	31.1	5	7.5	5	6.5	58.9	89	101	5	12	12
2 FT	11	9	8	5	7.5	4	7.5	57.0	27.8	31.1	5	7.5	5	6	58.9	89	101	5	12	12
4 FT	8	9	8	4	6	5	6.5	58.9	24.0	27.0	5	7.5	4	6	57.0	89	101	5	12	0
6 FT	8	9	8	4	6	5	6.5	46.0	25.0	28.1	5	7.5	5	6.5	50.6	89	101	5	12	0
8 FT	8	9	8	4	6	5	6	41.4	25.0	28.1	5	7.5	5	6.5	44.1	89	101	5	12	0
10 FT	8	9	8	4	6	5	6.5	35.9	25.0	28.1	5	7.5	5	6.5	36.8	89	101	5	12	0
12 FT	8	9	8	4	6	6	7.5	38.6	28.8	32.4	5	7.5	5	6	36.8	89	101	5	12	0
14 FT	8	9	8	5	8	6	7.5	37.8	28.8	32.4	5	7	6	6.5	38.6	89	101	5	12	0
16 FT	8	9	8	5	7	6	7	37.8	32.6	36.8	5	6	6	6	38.6	89	101	5	12	0
18 FT	9	10	8	5	6.5	6	7	37.8	29.4	33.0	5	6	6	6.5	38.6	90	102	5	12	0
20 FT	9	10	8	5	6	6	7	36.8	33.4	37.4	6	7.5	6	6	38.6	90	102	5	11	0
22 FT	10	11	9	5	6	5	6	34.4	30.0	33.6	6	8	5	6	35.4	91	103	5	12	0
24 FT	10	12	9	6	8.5	5	6	34.4	30.3	33.9	6	8	5	6.5	36.3	92	104	5	11	0
26 FT	11	13	9	6	8	6	7.5	38.1	31.9	35.6	6	8	5	6.5	36.3	93	105	5	10	0
28 FT	11	13	9	6	7	6	7	37.3	31.9	35.6	6	7.5	5	6	36.3	93	105	5	9.5	0
30 FT	12	13	9	6	7.5	6	7.5	37.3	33.3	37.1	6	7	6	7.5	39.0	93	105	5	8.5	0
32 FT	12	14	9	6	6.5	6	6.5	37.3	32.5	36.3	6	7	5	6	36.3	94	106	5	8.5	0
34 FT	13	14	9	6	7	6	7	38.1	33.9	37.8	6	7	6	7	39.0	94	106	5	8.5	0
36 FT	14	15	10	6	7	5	6.5	34.8	34.5	38.4	6	7	5	7	36.6	95	107	5	8	0
38 FT	14	16	11	6	7	5	6.5	36.1	34.9	38.8	6	7	5	7	37.0	96	108	5	8.5	0
40 FT	15	16	11	6	7	5	6.5	40.9	35.3	39.0	6	7	5	7	37.0	96	108	5	8	0
42 FT	15	17	11	6	6.5	5	6	40.9	35.5	39.4	6	7	5	7	37.0	97	109	5	7.5	0
44 FT	16	17	12	6	6.5	5	6.5	41.3	37.0	40.9	6	6.5	5	6.5	37.5	97	109	5	8	0
46 FT	16	18	12	6	6.5	5	6.5	41.3	36.1	40.0	6	6.5	5	6.5	37.5	98	110	5	8	0
48 FT	17	18	12	6	6.5	5	6.5	41.3	37.6	41.6	6	6.5	5	6.5	38.4	98	110	5	7.5	0
50 FT	17	18	12	6	6	5	6	41.3	37.6	41.6	6	6	5	6.5	38.4	98	110	5	7	0

SPAN (S) = 7 FT HEIGHT (HT) = 9 FT OR 10 FT

DESIGN FILL	MEMBER THICKNESS			TOP SLAB BARS							BOTTOM SLAB BARS							WALL BARS		
				A1 BARS		J3 BARS					A2 BARS		J4 BARS					B2 BARS		
	TS	BS	TX	SIZE	SPA.	SIZE	SPA.	C1	K2		SIZE	SPA.	SIZE	SPA.	C4	K3		SIZE	SPA.	G1
									HT=9′	HT=10′						HT=9′	HT=10′			
1 FT	11	10	8	5	7.5	4	6	57.0	27.3	29.9	5	7	5	6.5	58.9	114	126	5	12	12
2 FT	11	10	8	5	7.5	5	8.5	58.9	28.5	31.3	5	7	5	6	58.9	114	126	5	11	12
4 FT	8	9	9	4	6	5	6	59.5	28.8	31.6	5	7.5	5	6	59.5	113	125	5	10.5	0
6 FT	8	10	9	4	6	5	6	59.5	29.0	31.9	5	7	5	6.5	59.5	114	126	5	10	0
8 FT	8	10	9	4	6	6	7	62.3	29.0	31.9	5	7	5	6	59.5	114	126	5	9	0
10 FT	8	10	9	4	6	5	6	46.5	26.6	29.3	5	7.5	5	6	59.5	114	126	5	10	0
12 FT	8	11	9	4	6	6	7	47.4	25.6	28.1	5	7	5	6	59.5	115	127	5	9	0
14 FT	8	11	9	5	8.5	6	7	46.5	29.3	32.1	5	6.5	6	7	62.3	115	127	5	8.5	0
16 FT	9	11	9	5	8	5	6	46.5	29.5	32.4	5	6.5	6	6.5	62.3	115	127	5	8.5	0
18 FT	9	11	9	5	7	6	7	48.4	30.8	33.8	5	6.5	6	6	64.1	115	127	5	8.5	0
20 FT	10	11	9	5	7	6	7.5	50.3	31.0	34.0	5	6	6	6	60.5	115	127	5	8.5	0
22 FT	10	12	9	5	6.5	6	6.5	49.3	31.3	34.3	5	6	6	6	62.3	116	128	5	8	0
24 FT	11	12	9	5	6	6	7	51.1	35.3	38.6	6	8.5	6	6	64.1	116	128	5	7.5	0
26 FT	11	13	10	5	6	6	7.5	48.9	33.0	36.1	5	6	6	6.5	60.1	117	129	5	8	0
28 FT	12	13	11	5	6	5	6.5	45.6	32.0	35.0	6	8	6	7	54.1	117	129	5	7.5	0
30 FT	12	14	11	6	8	5	6	45.6	32.3	35.3	6	8	6	7	56.0	118	130	5	7.5	0
32 FT	13	14	12	6	8	5	6	46.1	33.8	36.9	6	7.5	6	8	52.8	118	130	5	7	0
34 FT	13	15	12	6	8	5	6	45.1	34.0	37.1	6	7.5	6	8	55.6	119	131	5	7	0
36 FT	14	15	12	6	7.5	6	8	49.9	35.6	38.9	6	7.5	6	7.5	54.8	119	131	5	7	0
38 FT	14	16	13	6	7.5	5	6	45.6	34.6	37.8	6	7	6	8	54.4	120	132	5	6.5	0
40 FT	15	16	13	6	7.5	6	8	55.3	36.1	39.4	6	7	6	7.5	54.4	120	132	5	6.5	0
42 FT	15	17	13	6	7	6	7.5	55.3	36.5	39.8	6	7	6	7.5	56.3	121	133	5	6.5	0
44 FT	16	17	14	6	7	6	8	55.9	38.1	41.5	6	7	6	7.5	53.9	121	133	5	6	0
46 FT	16	17	14	6	7	6	7.5	55.9	38.1	41.5	6	6.5	6	7	53.9	121	133	5	6	0
48 FT	16	18	14	6	6.5	6	7	55.9	37.0	40.3	6	6.5	6	7.5	55.9	122	134	5	6	0
50 FT	17	18	15	6	6.5	6	8	56.4	41.4	45.0	6	6.5	6	7.5	53.5	122	134	6	8	0

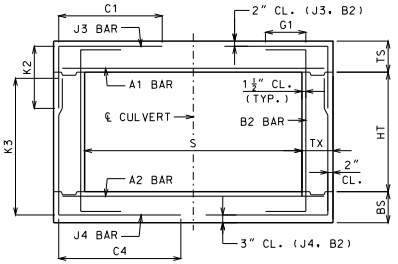

BAR DIMENSIONS DIAGRAM
SYMMETRICAL ABOUT ℄ CULVERT.

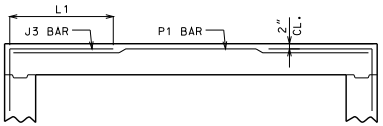

ALTERNATE J3 BAR

AT CONTRACTOR'S OPTION, ALTERNATE J3 BARS MAY BE USED WHEN THE DISTANCE BETWEEN THE ENDS OF J3 BARS IN THE TOP SLAB IS LESS THAN 2′-0″. DIMENSION L1 (NOT C1) SHALL BE USED WITH ALTERNATE J3 BARS. WHERE L1 IS EQUAL TO 18″, 22″ AND 28″ FOR #4, #5 AND #6 BARS, RESPECTIVELY. ADDITIONAL P1 BARS ARE REQUIRED WITH ALTERNATE J3 BARS WITH A LENGTH EQUAL TO A1 BARS, AND SIZE AND SPACING EQUAL TO J3 BARS. NO ADDITIONAL PAYMENT WILL BE MADE FOR THIS SUBSTITUTION.

GENERAL NOTES:

IF DESIGN FILL IS BETWEEN TABULATED DESIGN FILLS, USE THE NEXT GREATER TABULATED DESIGN FILL, EXCEPT FOR DESIGN FILLS BETWEEN 2 FEET AND 4 FEET. FOR DESIGN FILLS BETWEEN 2 FEET AND 4 FEET USE THE GREATER MEMBER THICKNESS, AREA OF REINFORCEMENT AND BAR DIMENSIONS FROM THE 2 FEET AND 4 FEET TABULATED DESIGN FILLS. AREA OF REINFORCEMENT EQUALS BAR AREA PER FOOT SPACING.

SPECIAL DESIGNS ARE REQUIRED WHEN THE DESIGN FILL IS LESS THAN 1 FOOT OR GREATER THAN 50 FEET.

DIMENSIONS ARE IN INCHES UNLESS OTHERWISE SPECIFIED.

DESIGN FILLS ARE MEASURED FROM THE TOP OF TOP SLAB TO THE TOP OF EARTH FILL OR ROADWAY.

CULVERTS MEET STRENGTH AND SERVICEABILITY REQUIREMENTS FOR THE DESIGN VEHICULAR LIVE LOAD HL-93 MINUS THE LANE LOAD.

MISSOURI HIGHWAYS AND TRANSPORTATION COMMISSION
105 WEST CAPITOL
JEFFERSON CITY, MO 65102
1-888-ASK-MODOT (1-888-275-6636)

STATE OF MISSOURI
DENNIS W. HECKMAN
NUMBER PE-27141
PROFESSIONAL ENGINEER
THIS SHEET HAS BEEN SIGNED, SEALED AND DATED ELECTRONICALLY.

CONCRETE SINGLE BOX CULVERT

MEMBER THICKNESS
BAR SIZE, SPACING & DIMENSIONS

SPAN (S): 7 FEET
HEIGHT (HT): 4 THRU 10 FEET

DATE EFFECTIVE: 04/01/2011
DATE PREPARED: 4/18/2011

703.17

SHEET NO.
5 OF 14

IF A SEAL IS PRESENT ON THIS SHEET IT HAS BEEN ELECTRONICALLY SEALED AND DATED.

SPAN (S) = 8 FT HEIGHT (HT) = 4 FT OR 5 FT OR 6 FT

DESIGN FILL	MEMBER THICKNESS			TOP SLAB BARS								BOTTOM SLAB BARS								WALL BARS		
				A1 BARS		J3 BARS						A2 BARS		J4 BARS						B2 BARS		
	TS	BS	TX	SIZE	SPA.	SIZE	SPA.	C1	K2			SIZE	SPA.	SIZE	SPA.	C4	K3			SIZE	SPA.	G1
									HT=4′	HT=5′	HT=6′						HT=4′	HT=5′	HT=6′			
1 FT	12	9	8	5	7	4	8.5	63.5	28.1	33.5	38.8	5	7.5	5	6	44.8	53	65	77	5	12	12
2 FT	12	9	8	5	7	4	8	63.5	28.1	33.5	38.8	5	7	6	7.5	43.6	53	65	77	5	12	12
4 FT	8	8	8	5	8	6	7.5	38.5	32.5	39.0	45.6	5	6.5	6	6	38.5	52	64	76	5	12	0
6 FT	8	8	8	5	8.5	6	7.5	37.5	32.5	39.0	45.6	5	7	6	6	36.4	52	64	76	5	12	0
8 FT	8	8	8	5	8	6	7.5	36.4	32.5	39.0	45.6	5	6.5	6	6	35.4	52	64	76	5	12	0
10 FT	8	8	8	5	8.5	6	7.5	34.4	32.5	39.0	45.6	5	7	6	6	34.4	52	64	76	5	12	0
12 FT	8	9	8	5	7.5	6	7.5	34.4	32.4	38.9	45.4	5	6.5	6	7.5	32.3	53	65	77	5	12	0
14 FT	8	9	8	5	6.5	6	6.5	34.4	32.4	38.9	45.4	6	8	6	7	32.3	53	65	77	5	12	0
16 FT	9	10	8	5	6	5	6	30.1	29.1	34.8	40.4	6	8	5	6.5	28.1	54	66	78	5	12	0
18 FT	9	11	8	6	7.5	6	7	33.3	29.6	35.3	40.9	6	7.5	5	7.5	27.0	55	67	79	5	12	0
20 FT	10	12	8	6	7.5	5	6	29.1	26.0	30.8	35.6	6	7.5	5	8.5	26.0	56	68	80	5	12	0
22 FT	11	13	8	6	7	5	6.5	28.1	27.5	32.4	37.3	6	7	5	8.5	26.0	57	69	81	5	12	0
24 FT	12	13	8	6	7	5	7.5	27.0	32.6	38.4	44.1	6	7	5	8	26.0	57	69	81	5	12	0
26 FT	13	14	8	6	7	5	8	27.0	29.4	34.5	39.5	6	7	5	8.5	26.0	58	70	82	5	12	0
28 FT	13	15	8	6	6.5	5	7	27.0	29.1	34.0	39.0	6	6.5	5	8.5	26.0	59	71	83	5	12	0
30 FT	14	15	8	6	6	5	7.5	26.0	30.3	35.3	40.4	6	6.5	5	8.5	26.0	59	71	83	5	12	0
32 FT	15	16	8	6	6	5	7.5	31.3	35.5	41.3	47.0	6	6.5	5	8	26.0	60	72	84	5	12	0
34 FT	15	17	8	6	6	5	7	31.3	31.5	36.5	41.6	6	6.5	5	7	26.0	61	73	85	5	12	0
36 FT	16	17	8	6	6	5	7	31.3	32.6	37.9	43.0	6	6	5	7	26.0	61	73	85	5	12	0
38 FT	16	18	8	7	7.5	5	7	31.3	36.3	41.9	47.5	6	6	5	6.5	26.0	62	74	86	5	11.5	0
40 FT	17	18	8	7	7.5	5	6.5	31.3	37.5	43.3	49.0	6	6	5	6.5	26.0	62	74	86	5	10.5	0
42 FT	17	19	8	7	7	5	6.5	31.3	37.1	42.8	48.4	6	6	5	6.5	26.0	63	75	87	5	10	0
44 FT	18	19	8	7	7	5	6.5	30.1	38.4	44.1	49.9	7	7.5	5	6.5	26.0	63	75	87	5	9.5	0
46 FT	18	20	8	7	7	5	6	31.3	38.1	43.8	49.4	7	7.5	5	6	26.0	64	76	88	5	9.5	0
48 FT	19	20	8	7	7	5	6	31.3	39.4	45.1	50.9	7	7.5	5	6	26.0	64	76	88	5	9.5	0
50 FT	19	20	8	7	6.5	5	6	31.3	39.4	45.1	50.9	7	7	6	7.5	29.1	64	76	88	5	9.5	0

SPAN (S) = 8 FT HEIGHT (HT) = 7 FT OR 8 FT OR 9 FT

DESIGN FILL	MEMBER THICKNESS			TOP SLAB BARS								BOTTOM SLAB BARS								WALL BARS		
				A1 BARS		J3 BARS						A2 BARS		J4 BARS						B2 BARS		
	TS	BS	TX	SIZE	SPA.	SIZE	SPA.	C1	K2			SIZE	SPA.	SIZE	SPA.	C4	K3			SIZE	SPA.	G1
									HT=7′	HT=8′	HT=9′						HT=7′	HT=8′	HT=9′			
1 FT	12	10	8	5	7	4	6.5	63.5	28.3	31.6	35.0	5	7	5	6.5	65.5	90	102	114	5	12	12
2 FT	12	10	8	5	7	4	6	63.5	28.3	31.6	35.0	5	7	5	6.5	65.5	90	102	114	5	12	12
4 FT	8	9	8	5	7.5	6	7.5	66.5	28.8	32.4	36.0	5	6.5	6	6.5	66.5	89	101	113	5	12	0
6 FT	8	9	8	5	8	6	7.5	53.0	28.8	32.4	36.0	5	7	6	6.5	58.3	89	101	113	5	12	0
8 FT	8	9	8	5	7.5	6	7.5	47.9	28.8	32.4	36.0	5	6.5	6	6	51.0	89	101	113	5	11.5	0
10 FT	8	9	8	5	8	6	7.5	41.6	28.8	32.4	36.0	5	7	6	6	43.6	89	101	113	5	12	0
12 FT	8	9	9	5	7.5	6	7	41.0	32.6	36.8	40.8	5	6.5	6	6.5	42.0	89	101	113	5	12	0
14 FT	8	10	9	5	6.5	6	6.5	41.0	28.1	31.6	35.1	5	6	6	7	42.0	90	102	114	5	12	0
16 FT	9	10	9	5	6	6	7.5	41.0	29.4	33.0	36.6	6	7.5	6	6.5	42.0	90	102	114	5	12	0
18 FT	9	11	9	6	8	6	6.5	39.9	29.8	33.3	36.9	6	7.5	6	7	42.0	91	103	115	5	11	0
20 FT	10	11	9	6	7.5	6	7	39.9	30.0	33.6	37.3	6	6.5	6	6	42.0	91	103	115	5	10	0
22 FT	11	12	9	6	7.5	6	7	39.9	31.6	35.4	39.0	6	7	6	6.5	42.0	92	104	116	5	9	0
24 FT	11	13	9	6	6.5	6	6.5	39.9	31.9	35.6	39.4	6	6.5	6	7	42.0	93	105	117	5	8.5	0
26 FT	12	14	10	6	7	5	6	38.1	32.5	36.3	40.0	6	7	5	6.5	39.3	94	106	118	5	9	0
28 FT	13	15	10	6	7	6	7.5	40.3	33.1	36.9	40.6	6	7	5	6.5	39.3	95	107	119	5	8	0
30 FT	13	15	10	6	6.5	6	6.5	40.3	33.1	36.9	40.6	6	6.5	5	6	39.3	95	107	119	5	8	0
32 FT	14	16	11	6	6.5	6	8.5	40.6	34.9	38.8	42.5	6	6.5	5	7	39.6	96	108	120	5	8	0
34 FT	15	17	11	6	6.5	6	8	47.1	35.5	39.4	43.3	6	6.5	5	7	39.6	97	109	121	5	7.5	0
36 FT	15	17	11	6	6	6	7	47.1	35.5	39.4	43.3	6	6	5	6.5	39.6	97	109	121	5	7.5	0
38 FT	16	18	12	6	6	6	8	47.5	36.1	40.0	43.9	6	6	5	6.5	40.0	98	110	122	5	7.5	0
40 FT	17	18	12	6	6	6	8	47.5	37.6	41.6	45.5	6	6	5	6.5	40.0	98	110	122	5	7	0
42 FT	17	19	12	7	8	6	7.5	47.5	38.0	41.9	45.9	6	6	5	6.5	41.0	99	111	123	5	7	0
44 FT	18	19	13	7	8	5	6	44.8	38.3	42.3	46.3	6	6	5	6	40.4	99	111	123	5	7	0
46 FT	18	20	13	7	7.5	6	8	48.0	38.6	42.6	46.5	7	8	5	6	41.4	100	112	124	5	6.5	0
48 FT	19	20	13	7	7.5	6	8	48.0	40.1	44.3	48.3	7	7.5	5	6	41.4	100	112	124	5	6.5	0
50 FT	19	21	13	7	7	6	7	48.0	39.3	43.3	47.3	7	7.5	5	6	41.4	101	113	125	5	6.5	0

SPAN (S) = 8 FT HEIGHT (HT) = 10 FT OR 11 FT

DESIGN FILL	MEMBER THICKNESS			TOP SLAB BARS							BOTTOM SLAB BARS							WALL BARS		
				A1 BARS		J3 BARS					A2 BARS		J4 BARS					B2 BARS		
	TS	BS	TX	SIZE	SPA.	SIZE	SPA.	C1	K2		SIZE	SPA.	SIZE	SPA.	C4	K3		SIZE	SPA.	G1
									HT=10′	HT=11′						HT=10′	HT=11′			
1 FT	11	10	8	5	6.5	5	7.5	65.5	31.3	34.0	5	6.5	6	6.5	66.5	126	138	5	9.5	12
2 FT	11	10	8	5	6.5	5	7	65.5	31.3	34.0	5	6	6	6	66.5	126	138	5	9.5	12
4 FT	8	9	9	5	7.5	6	7	68.3	33.0	36.0	5	6	6	6	68.3	125	137	5	8.5	0
6 FT	8	10	9	5	8.5	6	7	68.3	30.6	33.4	5	7	6	6.5	68.3	126	138	5	8.5	0
8 FT	8	10	9	5	8	6	7	68.3	33.3	36.3	5	7	6	6	68.3	126	138	5	8.5	0
10 FT	8	10	9	5	8.5	6	7	52.5	30.6	33.4	5	7	6	6	68.3	126	138	5	8.5	0
12 FT	8	10	9	5	7.5	6	6.5	50.4	33.3	36.3	5	6.5	6	6	65.1	126	138	5	8.5	0
14 FT	9	11	9	5	7	6	7	52.5	31.0	33.8	5	6.5	6	6	69.3	127	139	5	8.5	0
16 FT	9	11	9	5	6	6	6	50.4	33.8	36.8	6	8	6	6	64.0	127	139	5	8.5	0
18 FT	10	12	9	5	6	6	6	52.5	34.3	37.3	6	8	6	6	68.3	128	140	5	8	0
20 FT	11	12	10	5	6	5	6	48.8	31.8	34.5	6	7.5	6	6.5	58.3	128	140	5	8	0
22 FT	11	13	10	6	8	6	7	50.9	33.4	36.3	6	7.5	6	6.5	60.4	129	141	5	7.5	0
24 FT	12	13	11	6	7.5	6	8	51.4	33.6	36.5	6	7	6	7	56.8	129	141	5	7.5	0
26 FT	12	14	11	6	7	6	7.5	50.3	33.9	36.8	6	7	6	7	57.8	130	142	5	7.5	0
28 FT	13	15	12	6	7.5	6	8	50.8	34.4	37.3	6	7	6	7.5	57.3	131	143	5	7	0
30 FT	14	15	12	6	7	6	7.5	51.9	36.0	39.0	6	6.5	6	7	57.3	131	143	5	7	0
32 FT	14	16	13	6	7	6	8	51.3	36.3	39.3	6	6.5	6	7.5	56.6	132	144	5	6.5	0
34 FT	15	16	13	6	6.5	6	7.5	57.8	36.5	39.5	6	6.5	6	7	55.6	132	144	5	6.5	0
36 FT	15	17	13	6	6.5	6	6.5	57.8	36.8	39.8	6	6.5	6	7	57.8	133	145	5	6.5	0
38 FT	16	18	14	6	6.5	6	7.5	58.3	37.3	40.3	6	6.5	6	7.5	57.3	134	146	5	6	0
40 FT	16	18	14	6	6	6	7	58.3	37.3	40.3	6	6	6	7	57.3	134	146	5	6	0
42 FT	17	19	15	6	6	6	7	58.9	42.3	45.6	6	6	6	7.5	56.6	135	147	6	8	0
44 FT	17	19	15	6	6	6	6.5	57.8	42.3	45.6	6	6	6	7	56.6	135	147	6	8	0
46 FT	18	19	15	6	6	6	7	58.9	42.5	45.9	7	8	6	6	56.6	135	147	6	8	0
48 FT	18	20	16	7	8	6	7	58.3	42.9	46.3	7	8	6	7	56.0	136	148	6	8	0
50 FT	19	21	16	7	7.5	6	7	59.4	43.4	46.8	7	8	6	7	58.3	137	149	6	8	0

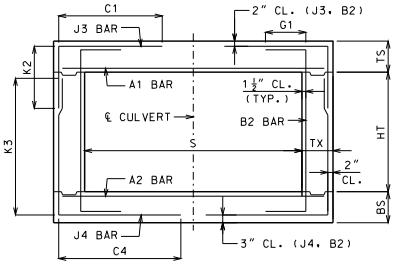

BAR DIMENSIONS DIAGRAM
SYMMETRICAL ABOUT ℄ CULVERT.

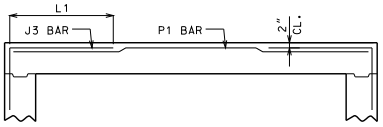

ALTERNATE J3 BAR

AT CONTRACTOR'S OPTION, ALTERNATE J3 BARS MAY BE USED WHEN THE DISTANCE BETWEEN THE ENDS OF J3 BARS IN THE TOP SLAB IS LESS THAN 2′-0″. DIMENSION L1 (NOT C1) SHALL BE USED WITH ALTERNATE J3 BARS. WHERE L1 IS EQUAL TO 18″, 22″ AND 28″ FOR #4, #5 AND #6 BARS, RESPECTIVELY. ADDITIONAL P1 BARS ARE REQUIRED WITH ALTERNATE J3 BARS WITH A LENGTH EQUAL TO A1 BARS, AND SIZE AND SPACING EQUAL TO J3 BARS. NO ADDITIONAL PAYMENT WILL BE MADE FOR THIS SUBSTITUTION.

GENERAL NOTES:

IF DESIGN FILL IS BETWEEN TABULATED DESIGN FILLS, USE THE NEXT GREATER TABULATED DESIGN FILL, EXCEPT FOR DESIGN FILLS BETWEEN 2 FEET AND 4 FEET. FOR DESIGN FILLS BETWEEN 2 FEET AND 4 FEET USE THE GREATER MEMBER THICKNESS, AREA OF REINFORCEMENT AND BAR DIMENSIONS FROM THE 2 FEET AND 4 FEET TABULATED DESIGN FILLS. AREA OF REINFORCEMENT EQUALS BAR AREA PER FOOT SPACING.

SPECIAL DESIGNS ARE REQUIRED WHEN THE DESIGN FILL IS LESS THAN 1 FOOT OR GREATER THAN 50 FEET.

DIMENSIONS ARE IN INCHES UNLESS OTHERWISE SPECIFIED.

DESIGN FILLS ARE MEASURED FROM THE TOP OF TOP SLAB TO THE TOP OF EARTH FILL OR ROADWAY.

CULVERTS MEET STRENGTH AND SERVICEABILITY REQUIREMENTS FOR THE DESIGN VEHICULAR LIVE LOAD HL-93 MINUS THE LANE LOAD.

MISSOURI HIGHWAYS AND TRANSPORTATION COMMISSION
105 WEST CAPITOL
JEFFERSON CITY, MO 65102
1-888-ASK-MODOT (1-888-275-6636)

STATE OF MISSOURI
DENNIS W. HECKMAN
NUMBER PE-27141
PROFESSIONAL ENGINEER
THIS SHEET HAS BEEN SIGNED, SEALED AND DATED ELECTRONICALLY.

CONCRETE SINGLE BOX CULVERT

MEMBER THICKNESS
BAR SIZE, SPACING & DIMENSIONS

SPAN (S): 8 FEET
HEIGHT (HT): 4 THRU 11 FEET

DATE EFFECTIVE: 04/01/2011
DATE PREPARED: 4/18/2011

703.17

SHEET NO.
6 OF 14

IF A SEAL IS PRESENT ON THIS SHEET IT HAS BEEN ELECTRONICALLY SEALED AND DATED.

SPAN (S) = 9 FT HEIGHT (HT) = 5 FT OR 6 FT OR 7 FT

DESIGN FILL	MEMBER THICKNESS			TOP SLAB BARS								BOTTOM SLAB BARS								WALL BARS		
				A1 BARS		J3 BARS						A2 BARS		J4 BARS						B2 BARS		
	TS	BS	TX	SIZE	SPA.	SIZE	SPA.	C1	K2 HT=5′	K2 HT=6′	K2 HT=7′	SIZE	SPA.	SIZE	SPA.	C4	K3 HT=5′	K3 HT=6′	K3 HT=7′	SIZE	SPA.	G1
1 FT	12	9	8	5	6.5	4	7	69.6	28.1	32.5	37.0	5	6.5	6	7.5	54.5	65	77	89	5	12	12
2 FT	12	9	8	5	6.5	4	7	69.6	28.1	32.5	37.0	5	6	6	7	48.8	65	77	89	5	12	12
4 FT	8	9	8	5	6.5	6	7	42.9	32.4	37.8	43.3	5	6	6	7.5	42.9	65	77	89	5	12	0
6 FT	8	9	8	5	7	6	7.5	40.6	32.4	37.8	43.3	5	6	6	7	39.5	65	77	89	5	12	0
8 FT	8	10	8	5	6.5	6	7	39.5	24.1	28.0	32.0	5	6	5	6.5	33.6	66	78	90	5	12	0
10 FT	8	10	8	5	7	6	7.5	37.1	24.1	28.0	32.0	5	6.5	4	6	31.4	66	78	90	5	12	0
12 FT	8	10	8	5	6	6	6	37.1	28.5	33.1	37.9	6	8	5	6.5	30.1	66	78	90	5	12	0
14 FT	9	10	8	6	7.5	6	7	34.8	29.6	34.4	39.3	6	7	5	6	30.1	66	78	90	5	12	0
16 FT	9	11	8	6	7	6	6	34.8	29.3	33.9	38.6	6	6.5	5	7	29.0	67	79	91	5	12	0
18 FT	10	12	8	6	6.5	6	6.5	33.6	30.0	34.8	39.4	6	6.5	5	7.5	29.0	68	80	92	5	12	0
20 FT	11	13	8	6	6	6	7	33.6	31.6	36.4	41.3	6	6	5	8	29.0	69	81	93	5	12	0
22 FT	12	14	8	6	6	5	6	29.0	32.4	37.3	42.0	6	6	5	8.5	27.9	70	82	94	5	12	0
24 FT	13	15	8	6	6	5	6	29.0	29.0	33.3	37.5	6	6	5	8.5	27.9	71	83	95	5	12	0
26 FT	14	16	8	6	6	5	6	29.0	30.6	34.9	39.3	6	6	5	8	27.9	72	84	96	5	12	0
28 FT	15	16	8	7	7.5	5	6.5	33.6	35.3	40.1	45.1	7	8	5	8	27.9	72	84	96	5	12	0
30 FT	15	17	8	7	7	6	8	37.1	35.6	40.6	45.5	7	7.5	5	7	27.9	73	85	97	5	11.5	0
32 FT	16	17	8	7	7	5	6	32.5	36.1	41.0	45.9	7	7.5	5	6.5	27.9	73	85	97	5	10	0
34 FT	17	18	8	7	7	5	6	32.5	37.8	42.9	47.9	7	7.5	5	6.5	29.0	74	86	98	5	9.5	0
36 FT	17	19	9	7	7	5	6	33.9	37.3	42.3	47.1	7	7.5	5	7.5	29.3	75	87	99	5	10.5	0
38 FT	18	20	9	7	7	5	6	33.9	38.1	43.0	48.0	7	7.5	5	7	29.3	76	88	100	5	9.5	0
40 FT	19	20	9	7	6.5	5	6.5	33.9	39.5	44.5	49.5	7	7	5	7	29.3	76	88	100	5	8.5	0
42 FT	19	21	10	7	6.5	5	6.5	34.3	39.9	45.0	50.0	7	7	5	7.5	29.5	77	89	101	5	10	0
44 FT	20	21	10	7	6.5	5	6.5	34.3	40.4	45.4	50.4	7	6.5	5	7.5	29.5	77	89	101	5	9.5	0
46 FT	21	22	10	7	6.5	5	6.5	34.3	41.1	46.3	51.3	7	7	5	7	29.5	78	90	102	5	8.5	0
48 FT	21	22	10	7	6	5	6.5	34.3	41.1	46.3	51.3	7	6.5	5	7	29.5	78	90	102	5	8	0
50 FT	22	23	10	7	6	5	6.5	34.3	42.0	47.0	52.1	7	6.5	5	6.5	30.6	79	91	103	5	8	0

SPAN (S) = 9 FT HEIGHT (HT) = 8 FT OR 9 FT OR 10 FT

DESIGN FILL	MEMBER THICKNESS			TOP SLAB BARS								BOTTOM SLAB BARS								WALL BARS		
				A1 BARS		J3 BARS						A2 BARS		J4 BARS						B2 BARS		
	TS	BS	TX	SIZE	SPA.	SIZE	SPA.	C1	K2 HT=8′	K2 HT=9′	K2 HT=10′	SIZE	SPA.	SIZE	SPA.	C4	K3 HT=8′	K3 HT=9′	K3 HT=10′	SIZE	SPA.	G1
1 FT	12	11	8	5	6.5	5	8.5	70.8	29.6	32.8	35.9	5	6.5	5	6.5	70.8	103	115	127	5	12	12
2 FT	12	11	8	5	6.5	5	8.5	70.8	29.6	32.8	35.9	5	6	5	6	70.8	103	115	127	5	11.5	12
4 FT	8	10	9	5	6.5	6	7	67.9	26.1	29.0	31.9	5	6	5	6	72.5	102	114	126	5	11.5	0
6 FT	8	10	9	5	7	6	7	53.9	28.4	31.5	34.6	5	6	6	7	64.4	102	114	126	5	11	0
8 FT	8	10	9	5	6.5	6	6.5	49.1	28.4	31.5	34.6	5	6	6	6.5	55.0	102	114	126	5	10.5	0
10 FT	8	10	9	5	7	6	7	44.5	28.4	31.5	34.6	5	6.5	6	7	46.8	102	114	126	5	12	0
12 FT	9	10	9	5	6.5	5	6	41.0	29.8	33.0	36.1	6	8	6	6	45.6	102	114	126	5	11.5	0
14 FT	9	10	9	6	8	6	6.5	43.3	33.0	36.6	40.3	6	6.5	6	6	45.6	102	114	126	5	10.5	0
16 FT	10	11	9	6	7.5	6	7	43.3	30.3	33.5	36.8	6	6.5	6	6	45.6	103	115	127	5	9.5	0
18 FT	10	12	9	6	6.5	6	6	43.3	31.6	35.0	38.4	6	6.5	6	6	45.6	104	116	128	5	8.5	0
20 FT	11	13	9	6	6.5	6	6.5	43.3	31.0	34.3	37.5	6	6.5	6	6	45.6	105	117	129	5	8.5	0
22 FT	12	13	9	6	6	6	6.5	43.3	33.6	37.1	40.6	6	6	7	6.5	48.0	105	117	129	5	8.5	0
24 FT	13	14	10	6	6	6	7	43.6	33.0	36.4	39.8	6	6	6	6.5	44.9	106	118	130	5	8	0
26 FT	14	15	10	6	6	6	7	43.6	34.8	38.3	41.8	6	6	6	7	44.9	107	119	131	5	8	0
28 FT	14	16	11	7	8	6	7	44.0	35.1	38.6	42.0	7	8	5	6	42.9	108	120	132	5	7.5	0
30 FT	15	17	11	7	8	6	6.5	50.0	35.6	39.1	42.6	6	6	5	6	42.9	109	121	133	5	7.5	0
32 FT	16	18	12	6	6	6	7.5	50.4	36.3	39.8	43.3	6	6	5	6	43.3	110	122	134	5	7	0
34 FT	16	18	12	7	7.5	6	7	50.4	36.3	39.8	43.3	7	7.5	5	6	43.3	110	122	134	5	7	0
36 FT	17	19	13	7	7.5	6	7.5	50.9	38.1	41.8	45.3	7	7.5	5	6	43.5	111	123	135	5	7	0
38 FT	18	20	13	7	7.5	6	7.5	50.9	38.8	42.3	45.9	7	7.5	5	6	43.5	112	124	136	5	6.5	0
40 FT	18	20	13	7	7	6	7	50.9	38.8	42.3	45.9	7	7	6	8.5	46.0	112	124	136	5	6.5	0
42 FT	19	21	13	7	7	6	6.5	50.9	39.3	42.9	46.5	7	7	6	8	47.3	113	125	137	5	6.5	0
44 FT	19	21	14	7	6.5	6	6.5	51.3	39.3	42.9	46.5	7	7	5	6	43.9	113	125	137	5	6	0
46 FT	20	22	14	7	6.5	6	7	51.3	41.3	45.0	48.6	7	7	6	8.5	47.6	114	126	138	5	6	0
48 FT	20	22	14	7	6.5	6	6	51.3	45.3	49.3	53.4	7	6.5	6	7.5	47.6	114	126	138	5	6	0
50 FT	21	23	14	7	6.5	6	6	51.3	41.9	45.6	49.3	7	6.5	6	8	47.6	115	127	139	5	6	0

SPAN (S) = 9 FT HEIGHT (HT) = 11 FT OR 12 FT

DESIGN FILL	MEMBER THICKNESS			TOP SLAB BARS							BOTTOM SLAB BARS							WALL BARS		
				A1 BARS		J3 BARS					A2 BARS		J4 BARS					B2 BARS		
	TS	BS	TX	SIZE	SPA.	SIZE	SPA.	C1	K2 HT=11′	K2 HT=12′	SIZE	SPA.	SIZE	SPA.	C4	K3 HT=11′	K3 HT=12′	SIZE	SPA.	G1
1 FT	11	11	8	5	6	5	6	70.8	31.3	33.8	5	6	6	6	73.1	139	151	5	9.5	12
2 FT	11	12	8	6	8.5	6	7	73.1	33.0	35.6	5	6	6	6	73.1	140	152	5	9.5	12
4 FT	8	10	9	5	6	6	6.5	73.8	33.4	36.1	6	8	6	6	73.8	138	150	5	8.5	0
6 FT	8	11	9	5	7	6	6.5	73.8	32.1	34.8	5	6	6	6	73.8	139	151	5	8.5	0
8 FT	9	11	9	5	7	6	7	73.8	30.9	33.4	5	6	6	6	73.8	139	151	5	8.5	0
10 FT	9	11	9	5	7.5	6	7	58.5	30.9	33.4	5	6.5	6	6	73.8	139	151	5	8.5	0
12 FT	9	12	9	5	6.5	6	6	56.1	34.0	36.8	5	6	6	6	73.8	140	152	5	8.5	0
14 FT	10	12	9	5	6	6	6	57.4	34.3	37.0	6	8	6	6	73.8	140	152	5	7.5	0
16 FT	10	12	10	6	8	6	6.5	53.1	34.3	37.0	6	7	6	6	63.8	140	152	5	8	0
18 FT	11	13	10	6	7.5	6	6.5	54.3	36.3	39.1	6	7	6	6	64.9	141	153	5	7.5	0
20 FT	11	13	11	6	6.5	6	6.5	52.4	36.3	39.1	6	6.5	6	7	59.5	141	153	5	7.5	0
22 FT	12	14	12	6	7	6	8	52.8	33.6	36.3	6	6.5	6	7.5	58.8	142	154	5	7	0
24 FT	13	15	12	6	6.5	6	7.5	54.0	37.3	40.1	6	6.5	6	7	60.0	143	155	5	7	0
26 FT	14	15	13	6	6.5	6	7.5	54.5	35.9	38.6	6	6	6	6.5	56.9	143	155	5	6.5	0
28 FT	14	16	13	6	6	6	7	53.3	39.3	42.3	6	6	6	7	58.1	144	156	5	6.5	0
30 FT	15	17	13	6	6	6	6.5	60.5	39.8	42.8	6	6	6	6.5	60.5	145	157	5	6.5	0
32 FT	16	17	14	6	6	6	7	61.0	40.0	43.0	6	6	6	6	57.4	145	157	5	6	0
34 FT	16	18	14	7	8	6	6.5	61.0	40.3	43.3	7	7.5	6	6.5	58.5	146	158	5	6	0
36 FT	17	19	15	6	6	6	7	60.3	42.4	45.5	7	8	6	6.5	59.0	147	159	6	8	0
38 FT	18	19	15	7	7.5	6	6.5	61.5	42.6	45.8	7	7.5	6	6.5	57.8	147	159	6	8	0
40 FT	18	20	15	7	7.5	6	6	61.5	42.9	46.0	7	7.5	6	6.5	60.3	148	160	6	8	0
42 FT	19	21	16	7	7.5	6	6.5	62.0	43.4	46.5	7	7.5	6	6.5	59.5	149	161	6	8	0
44 FT	19	21	16	7	7	6	6	62.0	43.4	46.5	7	7	6	6.5	59.5	149	161	6	8	0
46 FT	20	22	17	7	7	6	6.5	62.5	45.6	48.9	7	7	6	6.5	58.8	150	162	6	7.5	0
48 FT	20	22	17	7	7	6	6	61.3	45.6	48.9	7	7	6	6.5	58.8	150	162	6	7.5	0
50 FT	21	23	18	7	7	6	6.5	63.0	46.1	49.4	7	7	6	6.5	59.3	151	163	6	7	0

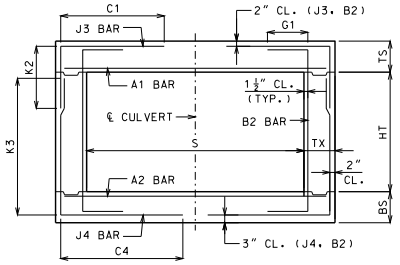

BAR DIMENSIONS DIAGRAM
SYMMETRICAL ABOUT ℄ CULVERT.

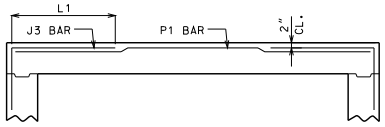

ALTERNATE J3 BAR

AT CONTRACTOR'S OPTION, ALTERNATE J3 BARS MAY BE USED WHEN THE DISTANCE BETWEEN THE ENDS OF J3 BARS IN THE TOP SLAB IS LESS THAN 2′-0″. DIMENSION L1 (NOT C1) SHALL BE USED WITH ALTERNATE J3 BARS. WHERE L1 IS EQUAL TO 18″, 22″ AND 28″ FOR #4, #5 AND #6 BARS, RESPECTIVELY. ADDITIONAL P1 BARS ARE REQUIRED WITH ALTERNATE J3 BARS WITH A LENGTH EQUAL TO A1 BARS, AND SIZE AND SPACING EQUAL TO J3 BARS. NO ADDITIONAL PAYMENT WILL BE MADE FOR THIS SUBSTITUTION.

GENERAL NOTES:

IF DESIGN FILL IS BETWEEN TABULATED DESIGN FILLS, USE THE NEXT GREATER TABULATED DESIGN FILL, EXCEPT FOR DESIGN FILLS BETWEEN 2 FEET AND 4 FEET. FOR DESIGN FILLS BETWEEN 2 FEET AND 4 FEET USE THE GREATER MEMBER THICKNESS, AREA OF REINFORCEMENT AND BAR DIMENSIONS FROM THE 2 FEET AND 4 FEET TABULATED DESIGN FILLS. AREA OF REINFORCEMENT EQUALS BAR AREA PER FOOT SPACING.

SPECIAL DESIGNS ARE REQUIRED WHEN THE DESIGN FILL IS LESS THAN 1 FOOT OR GREATER THAN 50 FEET.

DIMENSIONS ARE IN INCHES UNLESS OTHERWISE SPECIFIED.

DESIGN FILLS ARE MEASURED FROM THE TOP OF TOP SLAB TO THE TOP OF EARTH FILL OR ROADWAY.

CULVERTS MEET STRENGTH AND SERVICEABILITY REQUIREMENTS FOR THE DESIGN VEHICULAR LIVE LOAD HL-93 MINUS THE LANE LOAD.

MISSOURI HIGHWAYS AND TRANSPORTATION COMMISSION
105 WEST CAPITOL
JEFFERSON CITY, MO 65102
1-888-ASK-MODOT (1-888-275-6636)

STATE OF MISSOURI
DENNIS W. HECKMAN
NUMBER PE-27141
PROFESSIONAL ENGINEER
THIS SHEET HAS BEEN SIGNED, SEALED AND DATED ELECTRONICALLY.

CONCRETE SINGLE BOX CULVERT

MEMBER THICKNESS
BAR SIZE, SPACING & DIMENSIONS

SPAN (S): 9 FEET
HEIGHT (HT): 5 THRU 12 FEET

DATE EFFECTIVE: 04/01/2011
DATE PREPARED: 4/18/2011

703.17

SHEET NO.
7 OF 14

IF A SEAL IS PRESENT ON THIS SHEET IT HAS BEEN ELECTRONICALLY SEALED AND DATED.

SPAN (S) = 10 FT HEIGHT (HT) = 5 FT OR 6 FT OR 7 FT

DESIGN FILL	MEMBER THICKNESS			TOP SLAB BARS									BOTTOM SLAB BARS									WALL BARS		
				A1 BARS		J3 BARS							A2 BARS		J4 BARS							B2 BARS		
	TS	BS	TX	SIZE	SPA.	SIZE	SPA.	C1	K2				SIZE	SPA.	SIZE	SPA.	C4	K3				SIZE	SPA.	G1
									HT=5′	HT=6′	HT=7′							HT=5′	HT=6′	HT=7′				
1 FT	12	9	8	5	6	4	6	75.5	28.1	32.5	37.0		5	6	6	6.5	52.5	65	77	89		5	12	12
2 FT	12	10	8	5	6	5	7.5	76.8	32.4	37.4	42.4		5	6	5	6.5	44.8	66	78	90		5	12	12
4 FT	8	9	8	6	8	7	6.5	44.8	32.4	37.8	43.3		6	7.5	6	7	42.3	65	77	89		5	12	0
6 FT	8	10	8	6	8.5	6	6	42.3	28.5	33.1	37.9		6	7.5	5	6.5	35.9	66	78	90		5	12	0
8 FT	8	10	8	6	7.5	7	6	43.5	28.5	33.1	37.9		6	7	5	6.5	33.3	66	78	90		5	12	0
10 FT	9	10	8	6	7	6	6.5	38.4	29.6	34.4	39.3		6	6.5	6	7	35.9	66	78	90		5	12	0
12 FT	9	10	8	6	7.5	6	6.5	35.9	29.6	34.4	39.3		6	6.5	6	7	34.5	66	78	90		5	12	0
14 FT	9	11	8	6	6.5	7	6	39.6	29.3	33.9	38.6		6	6	5	7	29.5	67	79	91		5	12	0
16 FT	10	12	8	6	6	6	6	34.5	30.0	34.8	39.4		6	6	5	7.5	28.1	68	80	92		5	12	0
18 FT	11	13	8	7	7.5	6	6.5	33.3	31.6	36.4	41.3		7	7.5	5	8	28.1	69	81	93		5	12	0
20 FT	12	14	8	7	7.5	6	7	33.3	32.4	37.3	42.0		7	7.5	5	8.5	26.9	70	82	94		5	12	0
22 FT	13	15	8	7	7	6	7.5	32.0	33.3	38.0	42.8		7	7.5	5	8.5	26.9	71	83	95		5	12	0
24 FT	14	16	8	7	7	6	8	30.8	34.0	38.8	43.6		7	7.5	5	8	26.9	72	84	96		5	12	0
26 FT	15	17	8	7	6.5	6	8	37.1	35.6	40.6	45.5		7	7	5	7	26.9	73	85	97		5	12	0
28 FT	16	18	8	7	6.5	6	8.5	35.9	36.5	41.4	46.4		7	7	5	6.5	26.9	74	86	98		5	12	0
30 FT	17	18	8	7	6.5	5	6	32.0	37.8	42.9	47.9		7	6.5	5	6.5	26.9	74	86	98		5	11.5	0
32 FT	18	19	8	7	6.5	5	6	32.0	38.6	43.6	48.8		7	6.5	5	6.5	26.9	75	87	99		5	10	0
34 FT	18	20	8	7	6	6	7.5	35.9	38.1	43.0	48.0		7	6.5	5	6	26.9	76	88	100		5	9.5	0
36 FT	19	21	8	7	6	6	7.5	35.9	39.9	45.0	50.0		7	6.5	6	7.5	30.8	77	89	101		5	9.5	0
38 FT	20	21	8	7	6	6	7.5	35.9	44.1	49.6	55.3		7	6.5	6	7.5	30.8	77	89	101		5	9.5	0
40 FT	21	22	8	7	6	6	7	35.9	45.1	50.6	56.1		7	6.5	6	7	30.8	78	90	102		5	9	0
42 FT	21	23	9	8	7.5	5	6	33.5	41.6	46.6	51.6		7	6	5	6	28.4	79	91	103		5	8.5	0
44 FT	22	23	9	8	7.5	6	7.5	37.4	42.0	47.0	52.1		7	6	5	6	28.4	79	91	103		5	8.5	0
46 FT	23	24	10	8	7.5	5	6.5	33.8	43.9	49.0	54.1		7	6	5	6.5	28.6	80	92	104		5	8.5	0
48 FT	23	25	10	8	7	5	6	33.8	43.3	48.3	53.4		7	6	5	6	28.6	81	93	105		5	8	0
50 FT	24	25	10	8	7	5	6	33.8	44.8	49.9	55.0		7	6	5	6	28.6	81	93	105		5	8	0

SPAN (S) = 10 FT HEIGHT (HT) = 8 FT OR 9 FT OR 10 FT

DESIGN FILL	MEMBER THICKNESS			TOP SLAB BARS									BOTTOM SLAB BARS									WALL BARS		
				A1 BARS		J3 BARS							A2 BARS		J4 BARS							B2 BARS		
	TS	BS	TX	SIZE	SPA.	SIZE	SPA.	C1	K2				SIZE	SPA.	SIZE	SPA.	C4	K3				SIZE	SPA.	G1
									HT=8′	HT=9′	HT=10′							HT=8′	HT=9′	HT=10′				
1 FT	12	11	8	5	6	5	8	76.8	33.0	36.5	40.0		5	6	5	6	76.8	103	115	127		5	12	12
2 FT	12	11	8	6	8	5	7	76.8	33.0	36.5	40.0		6	8	6	7.5	79.4	103	115	127		5	11.5	12
4 FT	8	10	9	6	8	6	6	59.4	28.4	31.5	34.6		6	7.5	6	7	68.4	102	114	126		5	12	0
6 FT	8	10	9	6	8	6	6	51.6	32.8	36.3	39.9		6	7.5	6	6.5	56.8	102	114	126		5	11.5	0
8 FT	9	10	9	6	8	6	7	49.0	33.0	36.6	40.3		6	7	6	6	51.6	102	114	126		5	11.5	0
10 FT	9	11	9	6	7.5	6	6	47.8	30.0	33.3	36.5		6	7	6	6.5	49.0	103	115	127		5	11	0
12 FT	9	11	9	6	7.5	6	6.5	43.9	30.0	33.3	36.5		6	7	6	6.5	43.9	103	115	127		5	12	0
14 FT	10	11	9	6	7	6	6.5	42.6	31.4	34.8	38.1		6	6	6	6	43.9	103	115	127		5	12	0
16 FT	10	12	9	6	6	6	6	42.6	30.5	33.8	37.0		7	8	6	6.5	42.6	104	116	128		5	10.5	0
18 FT	11	13	9	6	6	6	6	42.6	31.0	34.3	37.5		7	7.5	6	6.5	42.6	105	117	129		5	9.5	0
20 FT	12	14	9	7	7.5	6	6.5	41.3	32.8	36.1	39.5		7	7.5	6	6.5	42.6	106	118	130		5	8.5	0
22 FT	13	15	9	7	7.5	6	6	41.3	33.4	36.6	40.0		7	7.5	6	6.5	42.6	107	119	131		5	8.5	0
24 FT	14	16	10	7	7.5	6	7	41.6	35.1	38.6	42.0		7	7.5	6	8	42.9	108	120	132		5	8	0
26 FT	15	17	11	7	7.5	6	7	48.5	35.6	39.1	42.6		7	7.5	5	6	40.6	109	121	133		5	8.5	0
28 FT	16	18	11	7	7	6	7	48.5	36.3	39.8	43.3		7	7.5	5	6	40.6	110	122	134		5	7.5	0
30 FT	17	19	12	7	7	6	7.5	48.9	38.1	41.8	45.3		7	7	5	6	40.9	111	123	135		5	8	0
32 FT	17	19	12	7	6.5	6	7	48.9	38.1	41.8	45.3		7	7	5	6	40.9	111	123	135		5	7.5	0
34 FT	18	20	12	7	6.5	6	7	48.9	38.8	42.3	45.9		7	6.5	6	8.5	43.5	112	124	136		5	7	0
36 FT	19	21	12	7	6.5	6	6	48.9	39.3	42.9	46.5		7	6.5	6	8	43.5	113	125	137		5	7	0
38 FT	19	21	13	7	6	6	6	49.3	39.3	42.9	46.5		7	6.5	6	8	43.9	113	125	137		5	7	0
40 FT	20	22	13	7	6	6	6.5	49.3	41.3	45.0	48.6		7	6.5	6	8	43.9	114	126	138		5	6.5	0
42 FT	21	23	13	7	6	6	6	49.3	41.9	45.6	49.3		7	6.5	6	8	43.9	115	127	139		5	6.5	0
44 FT	21	23	14	7	6	6	6	49.6	41.9	45.6	49.3		7	6	6	7.5	44.3	115	127	139		5	6.5	0
46 FT	22	24	14	7	6	6	6.5	49.6	42.5	46.3	49.9		7	6	6	8	45.5	116	128	140		5	6	0
48 FT	23	25	14	8	7.5	6	6.5	49.6	43.1	46.8	50.5		7	6	6	8	45.5	117	129	141		5	6	0
50 FT	23	25	14	8	7	6	6	49.6	43.1	46.8	50.5		7	6	6	7.5	45.5	117	129	141		5	6	0

SPAN (S) = 10 FT HEIGHT (HT) = 11 FT OR 12 FT OR 13 FT

DESIGN FILL	MEMBER THICKNESS			TOP SLAB BARS									BOTTOM SLAB BARS									WALL BARS		
				A1 BARS		J3 BARS							A2 BARS		J4 BARS							B2 BARS		
	TS	BS	TX	SIZE	SPA.	SIZE	SPA.	C1	K2				SIZE	SPA.	SIZE	SPA.	C4	K3				SIZE	SPA.	G1
									HT=11′	HT=12′	HT=13′							HT=11′	HT=12′	HT=13′				
1 FT	11	11	9	6	8	6	7.5	80.0	31.3	33.8	36.4		6	7.5	6	6	80.0	139	151	163		5	8.5	12
2 FT	11	11	9	6	7.5	6	7	80.0	35.8	38.6	41.5		6	7.5	6	6	80.0	139	151	163		5	8.5	12
4 FT	9	11	9	6	8	6	6.5	80.0	33.8	36.6	39.4		6	7.5	6	6	80.0	139	151	163		5	8	0
6 FT	9	12	9	5	6	6	6	80.0	31.1	33.6	36.1		6	7.5	6	6	80.0	140	152	164		5	7.5	0
8 FT	9	12	10	5	6	6	6.5	75.4	31.1	33.6	36.1		6	7.5	6	6.5	80.6	140	152	164		5	7.5	0
10 FT	10	12	10	6	8	6	6.5	74.1	32.8	35.4	38.0		6	7	6	6	80.6	140	152	164		5	7	0
12 FT	10	12	10	6	8.5	6	6.5	58.5	32.8	35.4	38.0		6	7.5	6	6	71.5	140	152	164		5	8	0
14 FT	10	13	10	6	7.5	6	6	57.3	31.5	34.0	36.5		6	7	6	6	74.1	141	153	165		5	7	0
16 FT	11	13	11	6	7	6	6.5	56.4	33.3	35.9	38.5		6	6.5	6	6.5	65.5	141	153	165		5	7.5	0
18 FT	12	14	12	6	7	6	7.5	56.8	33.6	36.3	39.0		6	6.5	6	7.5	63.4	142	154	166		5	7	0
20 FT	13	15	12	6	6.5	6	7	56.8	35.6	38.4	41.1		6	6	6	7	64.6	143	155	167		5	7	0
22 FT	13	15	13	6	6	6	7	55.9	35.6	38.4	41.1		7	8	6	7	61.1	143	155	167		5	6.5	0
24 FT	14	16	13	6	6	6	6.5	57.3	36.1	38.9	41.6		7	7.5	6	7	61.1	144	156	168		5	6.5	0
26 FT	15	17	13	7	8	6	6	63.9	36.6	39.4	42.1		7	7.5	6	6	62.5	145	157	169		5	6.5	0
28 FT	16	18	14	7	8	6	6.5	63.0	38.6	41.5	44.4		7	7.5	6	6.5	61.6	146	158	170		5	6	0
30 FT	16	18	14	7	7	6	6	63.0	40.3	43.3	46.3		7	7	6	6	61.6	146	158	170		5	6	0
32 FT	17	19	15	7	7	6	6	63.5	42.4	45.5	48.6		7	7	6	6	60.8	147	159	171		6	8	0
34 FT	18	20	15	7	7	6	6	63.5	42.9	46.0	49.1		7	7	6	6	62.1	148	160	172		6	8	0
36 FT	19	21	16	7	7	6	6	63.9	43.4	46.5	49.6		7	7	6	6	62.5	149	161	173		6	8	0
38 FT	19	21	16	7	6.5	7	7.5	69.4	43.4	46.5	49.6		7	6.5	6	6	61.3	149	161	173		6	8	0
40 FT	20	22	17	7	6.5	6	6	64.4	45.6	48.9	52.1		7	6.5	6	6	61.6	150	162	174		6	7.5	0
42 FT	21	23	17	7	6.5	7	7.5	69.9	46.1	49.4	52.6		7	6.5	6	6	63.0	151	163	175		6	7.5	0
44 FT	21	23	18	7	6.5	6	6	64.9	46.1	49.4	52.6		7	6.5	6	6	62.1	151	163	175		6	7	0
46 FT	22	24	19	7	6.5	6	6	65.4	46.8	50.0	53.3		7	6.5	6	6	62.5	152	164	176		6	6.5	0
48 FT	23	25	19	7	6	6	6	65.4	47.3	50.5	53.8		7	6	6	6	62.5	153	165	177		6	6.5	0
50 FT	23	25	20	7	6	6	6	65.8	47.3	50.5	53.8		7	6	6	6	63.0	153	165	177		6	6.5	0

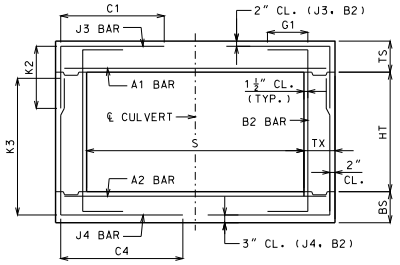

BAR DIMENSIONS DIAGRAM
SYMMETRICAL ABOUT ℄ CULVERT.

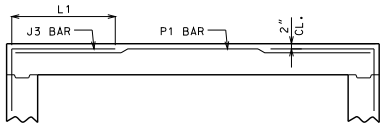

ALTERNATE J3 BAR

AT CONTRACTOR'S OPTION, ALTERNATE J3 BARS MAY BE USED WHEN THE DISTANCE BETWEEN THE ENDS OF J3 BARS IN THE TOP SLAB IS LESS THAN 2′-0″. DIMENSION L1 (NOT C1) SHALL BE USED WITH ALTERNATE J3 BARS. WHERE L1 IS EQUAL TO 18″, 22″ AND 28″ FOR #4, #5 AND #6 BARS, RESPECTIVELY. ADDITIONAL P1 BARS ARE REQUIRED WITH ALTERNATE J3 BARS WITH A LENGTH EQUAL TO A1 BARS, AND SIZE AND SPACING EQUAL TO J3 BARS. NO ADDITIONAL PAYMENT WILL BE MADE FOR THIS SUBSTITUTION.

GENERAL NOTES:

IF DESIGN FILL IS BETWEEN TABULATED DESIGN FILLS, USE THE NEXT GREATER TABULATED DESIGN FILL, EXCEPT FOR DESIGN FILLS BETWEEN 2 FEET AND 4 FEET. FOR DESIGN FILLS BETWEEN 2 FEET AND 4 FEET USE THE GREATER MEMBER THICKNESS, AREA OF REINFORCEMENT AND BAR DIMENSIONS FROM THE 2 FEET AND 4 FEET TABULATED DESIGN FILLS. AREA OF REINFORCEMENT EQUALS BAR AREA PER FOOT SPACING.

SPECIAL DESIGNS ARE REQUIRED WHEN THE DESIGN FILL IS LESS THAN 1 FOOT OR GREATER THAN 50 FEET.

DIMENSIONS ARE IN INCHES UNLESS OTHERWISE SPECIFIED.

DESIGN FILLS ARE MEASURED FROM THE TOP OF TOP SLAB TO THE TOP OF EARTH FILL OR ROADWAY.

CULVERTS MEET STRENGTH AND SERVICEABILITY REQUIREMENTS FOR THE DESIGN VEHICULAR LIVE LOAD HL-93 MINUS THE LANE LOAD.

MISSOURI HIGHWAYS AND TRANSPORTATION COMMISSION
105 WEST CAPITOL
JEFFERSON CITY, MO 65102
1-888-ASK-MODOT (1-888-275-6636)

STATE OF MISSOURI
DENNIS W. HECKMAN
NUMBER PE-27141
PROFESSIONAL ENGINEER
THIS SHEET HAS BEEN SIGNED, SEALED AND DATED ELECTRONICALLY.

CONCRETE SINGLE BOX CULVERT

MEMBER THICKNESS
BAR SIZE, SPACING & DIMENSIONS

SPAN (S): 10 FEET
HEIGHT (HT): 5 THRU 13 FEET

DATE EFFECTIVE: 04/01/2011
DATE PREPARED: 4/18/2011

703.17

SHEET NO.
8 OF 14

IF A SEAL IS PRESENT ON THIS SHEET IT HAS BEEN ELECTRONICALLY SEALED AND DATED.

SPAN (S) = 11 FT HEIGHT (HT) = 6 FT OR 7 FT OR 8 FT

DESIGN FILL	MEMBER THICKNESS			TOP SLAB BARS									BOTTOM SLAB BARS									WALL BARS		
				A1 BARS		J3 BARS							A2 BARS		J4 BARS							B2 BARS		
	TS	BS	TX	SIZE	SPA.	SIZE	SPA.	C1	K2				SIZE	SPA.	SIZE	SPA.	C4	K3				SIZE	SPA.	G1
									HT=6'	HT=7'	HT=8'							HT=6'	HT=7'	HT=8'				
1 FT	12	10	8	6	7.5	5	7	82.6	32.0	36.4	40.6		6	8	6	7.5	61.6	78	90	102		5	12	12
2 FT	12	10	8	6	7.5	5	6.5	82.6	32.0	36.4	40.6		6	7.5	6	7	53.3	78	90	102		5	12	12
4 FT	9	10	8	6	7	6	6.5	46.3	29.3	33.4	37.4		6	7	6	7.5	46.3	78	90	102		5	12	0
6 FT	9	10	8	6	7	6	6.5	43.4	29.3	33.4	37.4		6	6.5	6	6.5	42.0	78	90	102		5	12	0
8 FT	9	10	8	6	6.5	6	6	42.0	33.5	38.3	42.9		6	6	6	6	40.6	78	90	102		5	12	0
10 FT	10	11	8	6	6.5	6	6.5	39.3	30.8	35.0	39.3		7	8	6	7	37.8	79	91	103		5	12	0
12 FT	10	11	8	6	6.5	6	6.5	37.8	30.8	35.0	39.3		6	6	6	7	35.0	79	91	103		5	12	0
14 FT	10	11	8	7	7.5	6	6	36.4	34.4	39.0	43.6		7	7	6	6	35.0	79	91	103		5	12	0
16 FT	11	13	8	7	7	6	6	36.4	31.9	36.0	40.3		7	7	5	6.5	30.8	81	93	105		5	12	0
18 FT	11	14	8	7	6	7	6	39.3	31.3	35.4	39.5		7	6.5	5	7	29.4	82	94	106		5	12	0
20 FT	13	15	8	7	6.5	6	6.5	33.6	33.3	37.5	41.6		7	6.5	5	7	29.4	83	95	107		5	12	0
22 FT	14	16	8	7	6	6	6.5	33.6	34.9	39.3	43.5		7	6.5	5	7	29.4	84	96	108		5	12	0
24 FT	15	17	8	7	6	6	6.5	39.3	35.6	40.0	44.3		7	6.5	5	6.5	29.4	85	97	109		5	12	0
26 FT	16	18	8	7	6	6	6.5	37.8	36.4	40.6	45.0		7	6.5	5	6.5	29.4	86	98	110		5	10	0
28 FT	17	19	8	8	7.5	6	6.5	37.8	37.1	41.4	45.8		7	6	5	6.5	29.4	87	99	111		5	9.5	0
30 FT	18	20	8	8	7.5	6	6	37.8	38.9	43.3	47.8		7	6	5	6	29.4	88	100	112		5	9.5	0
32 FT	19	21	9	8	7.5	6	7	39.5	39.6	44.0	48.5		7	6	5	6.5	29.6	89	101	113		5	9	0
34 FT	20	22	10	8	7.5	6	8	39.8	40.4	44.8	49.3		7	6	5	7	31.3	90	102	114		5	10	0
36 FT	21	23	10	8	7.5	6	8	39.8	41.1	45.5	50.0		7	6	5	6.5	31.3	91	103	115		5	9	0
38 FT	22	23	10	8	7	6	8	39.8	42.5	47.1	51.6		8	7.5	5	6.5	31.3	91	103	115		5	8	0
40 FT	22	24	11	8	7	6	7	40.0	43.0	47.5	52.0		8	7.5	5	7	31.5	92	104	116		5	9	0
42 FT	23	25	11	8	7	6	8	40.0	43.8	48.3	52.9		8	7.5	5	7	31.5	93	105	117		5	8.5	0
44 FT	24	26	11	8	7	6	8	40.0	44.5	49.0	53.6		8	7.5	5	6.5	31.5	94	106	118		5	7.5	0
46 FT	25	26	11	8	6.5	6	8	40.0	46.0	50.8	55.4		8	7	5	6.5	31.5	94	106	118		5	7.5	0
48 FT	25	27	11	8	6.5	6	7.5	40.0	45.3	49.8	54.4		8	7	5	6	31.5	95	107	119		5	7.5	0
50 FT	26	27	11	8	6.5	6	8	40.0	46.8	51.5	56.1		8	7	5	6	31.5	95	107	119		5	7.5	0

SPAN (S) = 11 FT HEIGHT (HT) = 9 FT OR 10 FT OR 11 FT

DESIGN FILL	MEMBER THICKNESS			TOP SLAB BARS									BOTTOM SLAB BARS									WALL BARS		
				A1 BARS		J3 BARS							A2 BARS		J4 BARS							B2 BARS		
	TS	BS	TX	SIZE	SPA.	SIZE	SPA.	C1	K2				SIZE	SPA.	SIZE	SPA.	C4	K3				SIZE	SPA.	G1
									HT=9'	HT=10'	HT=11'							HT=9'	HT=10'	HT=11'				
1 FT	12	11	8	6	7.5	5	7	82.6	32.8	35.9	39.0		6	7.5	6	6.5	85.4	115	127	139		5	9.5	12
2 FT	12	11	8	6	7	5	6.5	82.6	32.8	35.9	39.0		6	7	6	6	85.4	115	127	139		5	9.5	12
4 FT	9	10	9	6	7	6	6.5	70.5	34.1	37.5	40.9		6	6.5	6	6	73.4	114	126	138		5	9.5	0
6 FT	9	11	9	6	7.5	6	6	57.8	30.8	33.8	36.8		6	6.5	6	6	64.9	115	127	139		5	9.5	0
8 FT	9	11	9	6	7	7	6.5	56.4	30.8	33.8	36.8		6	6	6	6	56.4	115	127	139		5	9	0
10 FT	10	12	9	6	6.5	6	6	50.8	31.3	34.3	37.3		6	6	6	6	55.0	116	128	140		5	8.5	0
12 FT	10	12	9	6	6.5	6	6	46.5	31.3	34.3	37.3		6	6	6	6	48.0	116	128	140		5	10	0
14 FT	11	12	9	6	6	6	6.5	45.1	35.3	38.6	42.0		7	7.5	6	6	46.5	116	128	140		5	9	0
16 FT	11	13	10	7	7.5	6	6	45.5	33.0	36.1	39.3		7	7	6	6.5	46.9	117	129	141		5	9.5	0
18 FT	12	14	10	7	7	6	6.5	45.5	32.3	35.3	38.3		7	7	6	6.5	45.5	118	130	142		5	8.5	0
20 FT	13	15	10	7	7	6	6	45.5	34.0	37.1	40.3		7	6.5	6	6.5	45.5	119	131	143		5	8	0
22 FT	14	16	11	7	7	6	6.5	45.8	35.9	39.1	42.4		7	6.5	6	7.5	45.8	120	132	144		5	8	0
24 FT	15	17	11	7	6.5	6	6	51.5	36.5	39.8	42.9		7	6.5	6	7.5	45.8	121	133	145		5	7.5	0
26 FT	16	18	12	7	6.5	6	6.5	51.9	37.0	40.3	43.5		7	6.5	6	8	46.1	122	134	146		5	7.5	0
28 FT	17	19	12	7	6.5	6	6.5	51.9	37.5	40.8	44.0		7	6.5	6	7.5	46.1	123	135	147		5	7	0
30 FT	18	20	13	7	6.5	6	6.5	52.3	38.1	41.3	44.5		7	6.5	6	8	46.4	124	136	148		5	7.5	0
32 FT	19	21	13	7	6	6	6.5	52.3	40.0	43.4	46.8		7	6	6	7.5	46.4	125	137	149		5	6.5	0
34 FT	20	22	13	7	6	6	6	52.3	40.6	44.0	47.4		7	6	6	7.5	46.4	126	138	150		5	6.5	0
36 FT	21	22	13	7	6	6	6	52.3	45.3	49.0	52.8		7	6	6	6.5	46.4	126	138	150		5	6.5	0
38 FT	21	23	14	8	7.5	6	6	52.5	41.1	44.5	47.9		7	6	6	7.5	46.8	127	139	151		5	6	0
40 FT	22	24	14	8	7.5	6	6	52.5	43.3	46.8	50.1		8	7.5	6	7	48.1	128	140	152		5	6	0
42 FT	23	25	15	8	7.5	6	6.5	52.9	48.4	52.1	56.0		8	7.5	6	7.5	48.5	129	141	153		5	6	0
44 FT	24	25	15	8	7	6	6.5	52.9	48.6	52.5	56.4		8	7	6	6.5	48.5	129	141	153		6	8	0
46 FT	24	26	15	8	7	6	6	52.9	49.0	52.8	56.6		8	7	6	7	48.5	130	142	154		6	8	0
48 FT	25	27	16	8	7	6	6	53.3	49.6	53.5	57.3		8	7	6	7.5	48.9	131	143	155		6	8	0
50 FT	26	27	16	8	6.5	6	6	53.3	51.5	55.5	59.4		8	7	6	6.5	48.9	131	143	155		6	8	0

SPAN (S) = 11 FT HEIGHT (HT) = 12 FT OR 13 FT OR 14 FT

DESIGN FILL	MEMBER THICKNESS			TOP SLAB BARS									BOTTOM SLAB BARS									WALL BARS		
				A1 BARS		J3 BARS							A2 BARS		J4 BARS							B2 BARS		
	TS	BS	TX	SIZE	SPA.	SIZE	SPA.	C1	K2				SIZE	SPA.	SIZE	SPA.	C4	K3				SIZE	SPA.	G1
									HT=12'	HT=13'	HT=14'							HT=12'	HT=13'	HT=14'				
1 FT	12	12	9	6	7.5	6	7	86.0	32.6	35.0	37.4		6	7.5	6	6	86.0	152	164	176		5	8.5	12
2 FT	12	12	9	6	7	6	6.5	86.0	34.3	36.8	39.3		6	7	6	6	86.0	152	164	176		5	8	12
4 FT	9	11	10	6	7	6	6	86.6	33.4	35.9	38.4		6	6.5	6	6	86.6	151	163	175		5	7.5	0
6 FT	9	12	10	6	7.5	6	6	86.6	33.6	36.1	38.6		6	6.5	6	6	88.0	152	164	176		5	7	0
8 FT	10	13	10	6	7.5	6	6	86.6	34.0	36.5	39.0		6	7	6	6	86.6	153	165	177		5	6.5	0
10 FT	10	13	11	6	7	6	6	70.1	34.0	36.5	39.0		6	6.5	6	6.5	88.6	153	165	177		5	6.5	0
12 FT	10	13	11	6	7.5	6	6	60.0	32.4	34.8	37.3		6	6.5	6	6.5	74.4	153	165	177		5	7.5	0
14 FT	11	13	11	6	6.5	6	6	60.0	35.9	38.5	41.1		6	6	6	6	70.1	153	165	177		5	7	0
16 FT	12	14	12	6	6.5	6	7	60.5	36.3	39.0	41.6		7	8	6	6.5	67.6	154	166	178		5	7	0
18 FT	13	15	13	6	6	6	7	59.5	38.4	41.1	43.9		7	7.5	6	7	65.3	155	167	179		5	6.5	0
20 FT	14	16	13	6	6	6	6.5	60.9	38.9	41.6	44.4		7	7.5	6	6.5	66.8	156	168	180		5	6.5	0
22 FT	14	17	14	7	7.5	6	6.5	59.9	39.1	41.9	44.6		7	7	6	6.5	64.3	157	169	181		5	6	0
24 FT	15	17	14	7	7	6	6	65.8	39.4	42.1	44.9		7	6.5	6	6	64.3	157	169	181		5	6	0
26 FT	16	18	15	7	7	6	6	66.1	41.5	44.4	47.3		7	6.5	6	6	63.3	158	170	182		6	8	0
28 FT	17	19	15	7	7	6	6	66.1	42.0	44.9	47.8		7	6.5	6	6	64.6	159	171	183		6	8	0
30 FT	18	20	16	7	7	6	6	66.6	42.5	45.4	48.3		7	6.5	6	6	63.6	160	172	184		6	8	0
32 FT	19	21	16	7	6.5	7	8	72.5	44.8	47.8	50.8		7	6.5	7	8	68.1	161	173	185		6	8	0
34 FT	20	22	16	7	6.5	7	7	72.5	45.3	48.3	51.3		7	6.5	7	7	68.1	162	174	186		6	8	0
36 FT	20	22	17	7	6	7	7.5	71.5	50.6	54.0	57.4		7	6	7	7	67.0	162	174	186		6	7.5	0
38 FT	21	23	18	7	6	7	7.5	72.0	45.8	48.8	51.8		7	6	7	7.5	67.5	163	175	187		6	7	0
40 FT	22	24	18	7	6	7	7	73.5	46.3	49.3	52.3		7	6	7	7.5	69.0	164	176	188		6	7	0
42 FT	23	25	19	7	6	7	7.5	74.0	48.6	51.8	54.9		7	6	7	8	68.0	165	177	189		6	6.5	0
44 FT	23	26	20	7	6	7	7.5	73.0	47.0	50.0	53.0		7	6	6	6	65.4	166	178	190		6	6.5	0
46 FT	24	26	20	8	7.5	7	7	73.0	49.1	52.3	55.4		8	7.5	7	7.5	68.4	166	178	190		6	6.5	0
48 FT	25	27	21	8	7.5	7	7.5	73.5	49.6	52.8	55.9		8	7.5	7	8	68.9	167	179	191		6	6	0
50 FT	25	27	21	8	7	7	7	73.5	49.6	52.8	55.9		8	7	7	7	68.9	167	179	191		6	6	0

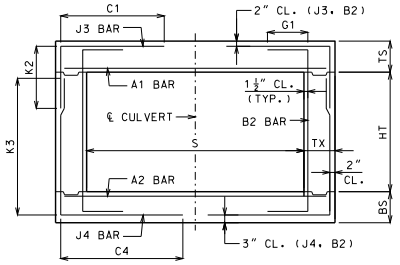

BAR DIMENSIONS DIAGRAM
SYMMETRICAL ABOUT ℄ CULVERT.

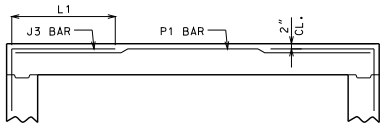

ALTERNATE J3 BAR

AT CONTRACTOR'S OPTION, ALTERNATE J3 BARS MAY BE USED WHEN THE DISTANCE BETWEEN THE ENDS OF J3 BARS IN THE TOP SLAB IS LESS THAN 2'-0". DIMENSION L1 (NOT C1) SHALL BE USED WITH ALTERNATE J3 BARS. WHERE L1 IS EQUAL TO 18", 22" AND 28" FOR #4, #5 AND #6 BARS, RESPECTIVELY. ADDITIONAL P1 BARS ARE REQUIRED WITH ALTERNATE J3 BARS WITH A LENGTH EQUAL TO A1 BARS, AND SIZE AND SPACING EQUAL TO J3 BARS. NO ADDITIONAL PAYMENT WILL BE MADE FOR THIS SUBSTITUTION.

GENERAL NOTES:

IF DESIGN FILL IS BETWEEN TABULATED DESIGN FILLS, USE THE NEXT GREATER TABULATED DESIGN FILL, EXCEPT FOR DESIGN FILLS BETWEEN 2 FEET AND 4 FEET. FOR DESIGN FILLS BETWEEN 2 FEET AND 4 FEET USE THE GREATER MEMBER THICKNESS, AREA OF REINFORCEMENT AND BAR DIMENSIONS FROM THE 2 FEET AND 4 FEET TABULATED DESIGN FILLS. AREA OF REINFORCEMENT EQUALS BAR AREA PER FOOT SPACING.

SPECIAL DESIGNS ARE REQUIRED WHEN THE DESIGN FILL IS LESS THAN 1 FOOT OR GREATER THAN 50 FEET.

DIMENSIONS ARE IN INCHES UNLESS OTHERWISE SPECIFIED.

DESIGN FILLS ARE MEASURED FROM THE TOP OF TOP SLAB TO THE TOP OF EARTH FILL OR ROADWAY.

CULVERTS MEET STRENGTH AND SERVICEABILITY REQUIREMENTS FOR THE DESIGN VEHICULAR LIVE LOAD HL-93 MINUS THE LANE LOAD.

MISSOURI HIGHWAYS AND TRANSPORTATION COMMISSION
105 WEST CAPITOL
JEFFERSON CITY, MO 65102
1-888-ASK-MODOT (1-888-275-6636)

DENNIS W. HECKMAN NUMBER PE-27141 STATE OF MISSOURI PROFESSIONAL ENGINEER
THIS SHEET HAS BEEN SIGNED, SEALED AND DATED ELECTRONICALLY.

CONCRETE SINGLE BOX CULVERT

MEMBER THICKNESS
BAR SIZE, SPACING & DIMENSIONS

SPAN (S): 11 FEET
HEIGHT (HT): 6 THRU 14 FEET

DATE EFFECTIVE: 04/01/2011
DATE PREPARED: 4/18/2011

703.17

SHEET NO.
9 OF 14

IF A SEAL IS PRESENT ON THIS SHEET IT HAS BEEN ELECTRONICALLY SEALED AND DATED.

SPAN (S) = 12 FT HEIGHT (HT) = 6 FT OR 7 FT OR 8 FT

DESIGN FILL	MEMBER THICKNESS			TOP SLAB BARS									BOTTOM SLAB BARS									WALL BARS		
				A1 BARS		J3 BARS							A2 BARS		J4 BARS							B2 BARS		
									K2									K3						
	TS	BS	TX	SIZE	SPA.	SIZE	SPA.	C1	HT=6'	HT=7'	HT=8'		SIZE	SPA.	SIZE	SPA.	C4	HT=6'	HT=7'	HT=8'		SIZE	SPA.	G1
1 FT	13	10	8	6	7.5	5	8.5	89.6	33.3	37.8	42.1		6	7.5	6	6.5	57.8	78	90	102		5	12	12
2 FT	14	10	8	6	7	5	8.5	89.6	34.6	39.1	43.8		6	7	6	6	51.6	78	90	102		5	12	12
4 FT	10	11	8	6	6.5	6	6.5	47.1	30.8	35.0	39.3		6	6.5	5	6.5	42.5	79	91	103		5	12	0
6 FT	10	11	8	6	6.5	6	6.5	44.1	30.8	35.0	39.3		6	6	5	6	39.5	79	91	103		5	12	0
8 FT	10	11	8	6	6	6	6.5	41.0	30.8	35.0	39.3		7	7.5	6	6.5	39.5	79	91	103		5	12	0
10 FT	10	11	8	7	7	7	6	42.5	34.4	39.0	43.6		7	6.5	6	6	38.0	79	91	103		5	12	0
12 FT	11	12	8	7	7	6	6	38.0	35.1	39.8	44.5		7	6.5	6	6.5	36.5	80	92	104		5	12	0
14 FT	11	13	8	7	7	6	6	36.5	31.9	36.0	40.3		7	6.5	5	7	30.4	81	93	105		5	12	0
16 FT	12	14	8	7	6.5	6	6	35.0	32.5	36.8	41.0		7	6.5	5	7	30.4	82	94	106		5	12	0
18 FT	13	15	8	7	6	6	6.5	33.5	33.3	37.5	41.6		7	6	5	6.5	30.4	83	95	107		5	12	0
20 FT	15	17	8	7	6	6	7	39.5	35.6	40.0	44.3		7	6.5	5	7	30.4	85	97	109		5	12	0
22 FT	16	18	8	7	6	6	7	39.5	36.4	40.6	45.0		7	6	5	6.5	30.4	86	98	110		5	12	0
24 FT	17	19	8	8	7.5	6	7	39.5	37.1	41.4	45.8		7	6	5	6.5	30.4	87	99	111		5	11	0
26 FT	18	20	8	8	7	6	7	39.5	38.9	43.3	47.8		7	6	5	6	30.4	88	100	112		5	9.5	0
28 FT	19	21	8	8	7	6	7	39.5	39.6	44.0	48.5		7	6	6	7.5	33.5	89	101	113		5	9.5	0
30 FT	20	21	8	8	7	6	6.5	39.5	44.3	49.3	54.1		8	7	6	7.5	33.5	89	101	113		5	9.5	0
32 FT	21	23	9	8	7	6	7.5	39.8	41.1	45.5	50.0		8	7.5	5	6	30.6	91	103	115		5	8.5	0
34 FT	22	23	9	8	6.5	6	7.5	39.8	42.5	47.1	51.6		8	7	5	6	30.6	91	103	115		5	8.5	0
36 FT	23	24	9	8	6.5	6	7	39.8	47.9	52.9	58.0		8	7	6	7	33.6	92	104	116		5	8.5	0
38 FT	24	25	9	8	6.5	6	6.5	39.8	48.8	53.8	58.8		8	7	6	7	33.6	93	105	117		5	8.5	0
40 FT	24	26	10	8	6	6	7	40.0	44.5	49.0	53.6		8	7	5	6	30.8	94	106	118		5	8	0
42 FT	25	27	10	8	6	6	7	40.0	45.3	49.8	54.4		8	7	6	7	33.9	95	107	119		5	8	0
44 FT	26	27	10	8	6	6	7	40.0	50.4	55.5	60.5		8	6.5	6	7	33.9	95	107	119		5	8	0
46 FT	27	28	10	8	6	6	7	40.0	51.3	56.3	61.4		8	6.5	6	7	33.9	96	108	120		5	7.5	0
48 FT	28	29	11	8	6	6	7.5	40.3	52.1	57.1	62.1		8	6.5	6	7.5	34.1	97	109	121		5	7.5	0
50 FT	28	30	11	8	6	6	7.5	40.3	52.5	57.5	62.6		8	6.5	6	7	34.1	98	110	122		5	7.5	0

SPAN (S) = 12 FT HEIGHT (HT) = 9 FT OR 10 FT OR 11 FT

DESIGN FILL	MEMBER THICKNESS			TOP SLAB BARS									BOTTOM SLAB BARS									WALL BARS		
				A1 BARS		J3 BARS							A2 BARS		J4 BARS							B2 BARS		
									K2									K3						
	TS	BS	TX	SIZE	SPA.	SIZE	SPA.	C1	HT=9'	HT=10'	HT=11'		SIZE	SPA.	SIZE	SPA.	C4	HT=9'	HT=10'	HT=11'		SIZE	SPA.	G1
1 FT	11	12	8	6	6.5	6	7	91.3	31.5	34.5	37.5		6	7.5	6	7	91.3	116	128	140		5	10	12
2 FT	11	12	8	6	6	6	6.5	91.3	31.5	34.5	37.5		6	7	6	6.5	91.3	116	128	140		5	9.5	12
4 FT	10	12	8	6	6	6	6	69.9	30.0	32.9	35.8		6	6.5	6	6.5	83.6	116	128	140		5	9.5	0
6 FT	10	12	8	6	6.5	6	6	57.8	31.3	34.3	37.3		6	6	6	6	62.4	116	128	140		5	9.5	0
8 FT	10	12	9	6	6	6	6	52.0	31.3	34.3	37.3		7	8	6	6	55.1	116	128	140		5	10	0
10 FT	10	12	9	7	7.5	7	6	52.0	35.0	38.4	41.8		7	7	6	6	50.5	116	128	140		5	9.5	0
12 FT	11	13	10	7	7.5	6	6	49.3	33.0	36.1	39.3		7	7	6	6.5	49.3	117	129	141		5	10	0
14 FT	11	13	10	7	7.5	6	6	46.3	31.8	34.8	37.8		7	7	6	6.5	46.3	117	129	141		5	12	0
16 FT	12	14	10	7	7	6	6.5	46.3	32.3	35.3	38.3		7	6.5	6	7	44.6	118	130	142		5	11	0
18 FT	13	15	10	7	6.5	6	6	44.6	38.0	41.5	45.0		7	6	6	7	44.6	119	131	143		5	9.5	0
20 FT	14	16	10	7	6	7	7.5	47.8	38.6	42.0	45.5		7	6	6	6.5	44.6	120	132	144		5	8.5	0
22 FT	16	18	11	7	6.5	6	6.5	51.1	37.0	40.3	43.5		7	6.5	6	7.5	45.0	122	134	146		5	8.5	0
24 FT	17	19	11	7	6	6	6	49.6	37.5	40.8	44.0		7	6	6	7.5	45.0	123	135	147		5	7.5	0
26 FT	18	20	12	7	6	6	6.5	49.9	38.1	41.3	44.5		7	6	6	7.5	45.3	124	136	148		5	8	0
28 FT	19	21	12	7	6	6	6	49.9	40.0	43.4	46.8		7	6	6	7.5	45.3	125	137	149		5	7	0
30 FT	20	22	13	8	7.5	6	6.5	51.8	40.6	44.0	47.4		7	6	6	8	45.5	126	138	150		5	7.5	0
32 FT	21	23	13	8	7.5	6	6	50.3	41.1	44.5	47.9		8	7.5	6	7.5	45.5	127	139	151		5	7	0
34 FT	21	23	13	8	7	6	6	50.3	45.6	49.3	53.0		8	7	6	7	45.5	127	139	151		5	6.5	0
36 FT	22	24	14	8	7	6	6	52.1	43.3	46.8	50.1		8	7	6	7.5	45.9	128	140	152		5	7	0
38 FT	23	25	14	8	6.5	6	6	50.5	43.8	47.3	50.8		8	7	6	7.5	45.9	129	141	153		5	6	0
40 FT	24	26	14	8	6.5	6	6	50.5	44.4	47.9	51.4		8	7	6	7	45.9	130	142	154		5	6	0
42 FT	25	27	15	8	6.5	6	6	52.5	49.6	53.5	57.3		8	7	6	7.5	46.1	131	143	155		5	6	0
44 FT	26	28	15	8	6.5	6	6	52.5	50.3	54.1	57.9		8	6.5	6	7.5	47.8	132	144	156		6	8	0
46 FT	27	28	15	8	6.5	6	6	50.9	52.1	56.1	60.0		8	6.5	6	7	47.8	132	144	156		6	8	0
48 FT	27	29	15	8	6	6	6	52.5	52.5	56.4	60.4		8	6.5	6	7	47.8	133	145	157		6	8	0
50 FT	28	30	16	8	6	6	6	52.8	53.1	57.1	61.0		8	6.5	6	7.5	48.0	134	146	158		6	8	0

SPAN (S) = 12 FT HEIGHT (HT) = 12 FT OR 13 FT

DESIGN FILL	MEMBER THICKNESS			TOP SLAB BARS									BOTTOM SLAB BARS									WALL BARS		
				A1 BARS		J3 BARS							A2 BARS		J4 BARS							B2 BARS		
									K2									K3						
	TS	BS	TX	SIZE	SPA.	SIZE	SPA.	C1	HT=12'	HT=13'			SIZE	SPA.	SIZE	SPA.	C4	HT=12'	HT=13'			SIZE	SPA.	G1
1 FT	12	11	9	6	6.5	5	6	90.3	32.4	34.8			6	6.5	6	6	91.8	151	163			5	8.5	12
2 FT	12	11	9	6	6.5	6	7	91.8	34.0	36.5			6	6.5	6	6	91.8	151	163			5	8.5	12
4 FT	10	12	9	6	6.5	6	6	91.8	35.4	38.0			6	6.5	6	6	91.8	152	164			5	8.5	0
6 FT	10	12	9	6	6.5	7	6.5	81.1	35.4	38.0			6	6	6	6	91.8	152	164			5	8	0
8 FT	10	12	10	6	6.5	6	6	64.6	35.4	38.0			7	7.5	6	6	73.9	152	164			5	8	0
10 FT	11	13	10	6	6	6	6	61.6	35.9	38.5			7	7.5	6	6	69.3	153	165			5	8	0
12 FT	12	13	11	6	6	6	7	58.9	36.1	38.8			7	7	6	6	62.0	153	165			5	7.5	0
14 FT	12	13	11	6	6	6	7	54.3	36.1	38.8			7	7	6	6	55.8	153	165			5	7.5	0
16 FT	12	14	11	7	7	6	6	52.8	36.3	39.0			7	6.5	6	6.5	55.8	154	166			5	7.5	0
18 FT	13	16	12	7	7	6	6	53.0	38.6	41.4			7	6.5	6	7	56.1	156	168			5	7	0
20 FT	14	16	12	7	6.5	6	6	53.0	38.9	41.6			7	6	6	6	54.6	156	168			5	7	0
22 FT	16	18	13	7	6.5	6	6	59.6	41.5	44.4			7	6.5	6	7	55.0	158	170			5	6.5	0
24 FT	16	19	13	7	6	7	7	64.4	40.0	42.8			7	6	6	6.5	55.0	159	171			5	6.5	0
26 FT	18	20	14	7	6.5	6	6	58.5	42.5	45.4			7	6	6	6.5	55.3	160	172			5	6	0
28 FT	18	21	14	7	6	7	7	63.3	42.8	45.6			7	6	6	6.5	55.3	161	173			5	6	0
30 FT	19	22	14	8	7.5	7	6.5	63.3	43.3	46.1			7	6	6	6	55.3	162	174			5	6	0
32 FT	20	23	15	8	7.5	7	7.5	63.6	45.5	48.5			8	7.5	6	6.5	55.6	163	175			6	8	0
34 FT	21	23	15	8	7	7	7	63.6	45.8	48.8			8	7	6	6	55.6	163	175			6	8	0
36 FT	22	24	16	8	7	7	7.5	64.0	46.3	49.3			8	7	6	6.5	56.0	164	176			6	8	0
38 FT	23	25	16	8	7	7	7	64.0	48.6	51.8			8	7	6	6	56.0	165	177			6	8	0
40 FT	24	26	17	8	7	7	7.5	64.4	49.1	52.3			8	7	6	6.5	56.4	166	178			6	7.5	0
42 FT	24	27	17	8	6.5	7	6.5	64.4	49.4	52.5			8	7	6	6	56.4	167	179			6	7.5	0
44 FT	25	28	18	8	6.5	7	7	66.4	49.9	53.0			8	7	6	6.5	56.8	168	180			6	7	0
46 FT	26	28	18	8	6.5	7	7	66.4	50.1	53.3			8	6.5	6	6	56.8	168	180			6	7	0
48 FT	27	29	19	8	6.5	7	7.5	66.9	52.6	55.9			8	6.5	6	6.5	57.0	169	181			6	6.5	0
50 FT	28	30	19	8	6.5	7	7	66.9	53.3	56.4			8	6.5	6	6	57.0	170	182			6	6.5	0

SPAN (S) = 12 FT HEIGHT (HT) = 14 FT OR 15 FT

DESIGN FILL	MEMBER THICKNESS			TOP SLAB BARS									BOTTOM SLAB BARS									WALL BARS		
				A1 BARS		J3 BARS							A2 BARS		J4 BARS							B2 BARS		
									K2									K3						
	TS	BS	TX	SIZE	SPA.	SIZE	SPA.	C1	HT=14'	HT=15'			SIZE	SPA.	SIZE	SPA.	C4	HT=14'	HT=15'			SIZE	SPA.	G1
1 FT	12	12	10	6	7	6	7.5	94.0	35.5	37.8			6	7	6	6.5	94.0	176	188			5	7.5	12
2 FT	12	12	10	6	6.5	6	7	94.0	37.4	39.8			6	6.5	6	6	94.0	176	188			5	7.5	12
4 FT	10	13	10	6	6.5	6	6	94.0	35.4	37.6			6	6.5	6	6	94.0	177	189			5	6.5	0
6 FT	10	13	11	6	7	6	6.5	94.5	35.4	37.6			6	6.5	6	6.5	94.5	177	189			5	6.5	0
8 FT	10	13	11	6	6.5	6	6	85.3	35.4	37.6			6	6	6	6	94.5	177	189			5	6	0
10 FT	11	13	12	6	6.5	6	6.5	74.9	35.5	37.8			7	7.5	6	6	95.1	177	189			5	6	0
12 FT	12	14	13	6	6.5	6	7	70.6	37.8	40.3			7	7.5	6	6.5	83.3	178	190			5	6	0
14 FT	12	14	13	6	6.5	6	7	62.8	37.8	40.3			7	7.5	6	6.5	69.1	178	190			5	6.5	0
16 FT	13	15	13	6	6	6	6.5	64.4	38.3	40.6			7	7	6	6.5	70.6	179	191			5	6.5	0
18 FT	14	16	14	7	7.5	6	6.5	63.3	38.6	41.0			7	7	6	6.5	68.0	180	192			5	6	0
20 FT	15	17	14	7	7	6	6	69.5	39.0	41.4			7	6.5	6	6	68.0	181	193			5	6	0
22 FT	16	18	15	7	7	6	6	70.0	41.4	43.9			7	6.5	6	6.5	68.4	182	194			6	8	0
24 FT	16	19	15	7	6.5	7	7	73.1	41.6	44.1			7	6	6	6	68.4	183	195			6	8	0
26 FT	17	20	16	7	6.5	7	7	73.6	42.0	44.5			7	6	6	6	67.3	184	196			6	8	0
28 FT	18	21	16	7	6	7	7	75.3	46.5	49.3			7	6	7	7.5	72.0	185	197			6	8	0
30 FT	19	22	17	7	6	7	7	74.0	46.9	49.6			7	6	7	7.5	70.9	186	198			6	7.5	0
32 FT	20	23	17	7	6	7	6.5	75.6	47.4	50.1			7	6	7	7	70.9	187	199			6	7.5	0
34 FT	21	23	18	8	7.5	7	7	74.5	51.8	54.8			8	7.5	7	6.5	71.3	187	199			6	7	0
36 FT	22	24	19	8	7.5	7	7.5	75.0	52.3	55.3			8	7.5	7	7	70.1	188	200			6	6.5	0
38 FT	23	25	19	8	7.5	7	6.5	76.6	50.6	53.5			8	7	7	7	71.8	189	201			6	6.5	0
40 FT	24	26	20	8	7	7	7	75.5	51.1	54.0			8	7	7	7.5	70.5	190	202			6	6.5	0
42 FT	25	27	20	8	7	7	6.5	77.1	53.8	56.8			8	7	7	7	72.1	191	203			6	6.5	0
44 FT	25	28	21	8	7	7	6.5	75.9	54.0	57.0			8	7	7	7.5	72.6	192	204			6	6	0
46 FT	26	28	22	8	6.5	7	7	76.4	56.4	59.5			8	6.5	7	7	71.4	192	204			6	6	0
48 FT	27	29	22	8	6.5	7	6.5	76.4	59.1	62.4			8	6.5	7	7	71.4	193	205			6	6	0
50 FT	27	30	23	8	6.5	7	6.5	76.9	57.3	60.4			8	6.5	7	7	71.8	194	206			7	7.5	0

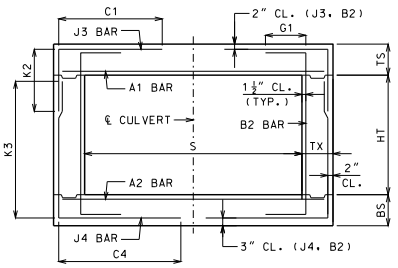

BAR DIMENSIONS DIAGRAM
SYMMETRICAL ABOUT ℄ CULVERT.

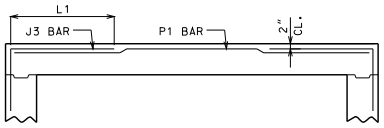

ALTERNATE J3 BAR

AT CONTRACTOR'S OPTION, ALTERNATE J3 BARS MAY BE USED WHEN THE DISTANCE BETWEEN THE ENDS OF J3 BARS IN THE TOP SLAB IS LESS THAN 2'-0". DIMENSION L1 (NOT C1) SHALL BE USED WITH ALTERNATE J3 BARS. WHERE L1 IS EQUAL TO 18", 22" AND 28" FOR #4, #5 AND #6 BARS, RESPECTIVELY. ADDITIONAL P1 BARS ARE REQUIRED WITH ALTERNATE J3 BARS WITH A LENGTH EQUAL TO A1 BARS, AND SIZE AND SPACING EQUAL TO J3 BARS. NO ADDITIONAL PAYMENT WILL BE MADE FOR THIS SUBSTITUTION.

GENERAL NOTES:

IF DESIGN FILL IS BETWEEN TABULATED DESIGN FILLS, USE THE NEXT GREATER TABULATED DESIGN FILL, EXCEPT FOR DESIGN FILLS BETWEEN 2 FEET AND 4 FEET. FOR DESIGN FILLS BETWEEN 2 FEET AND 4 FEET USE THE GREATER MEMBER THICKNESS, AREA OF REINFORCEMENT AND BAR DIMENSIONS FROM THE 2 FEET AND 4 FEET TABULATED DESIGN FILLS, AREA OF REINFORCEMENT EQUALS BAR AREA PER FOOT SPACING.

SPECIAL DESIGNS ARE REQUIRED WHEN THE DESIGN FILL IS LESS THAN 1 FOOT OR GREATER THAN 50 FEET.

DIMENSIONS ARE IN INCHES UNLESS OTHERWISE SPECIFIED.

DESIGN FILLS ARE MEASURED FROM THE TOP OF TOP SLAB TO THE TOP OF EARTH FILL OR ROADWAY.

CULVERTS MEET STRENGTH AND SERVICEABILITY REQUIREMENTS FOR THE DESIGN VEHICULAR LIVE LOAD HL-93 MINUS THE LANE LOAD.

MISSOURI HIGHWAYS AND TRANSPORTATION COMMISSION
105 WEST CAPITOL
JEFFERSON CITY, MO 65102
1-888-ASK-MODOT (1-888-275-6636)

STATE OF MISSOURI — DENNIS W. HECKMAN — NUMBER PE-27141 — PROFESSIONAL ENGINEER — THIS SHEET HAS BEEN SIGNED, SEALED AND DATED ELECTRONICALLY.

CONCRETE SINGLE BOX CULVERT

MEMBER THICKNESS
BAR SIZE, SPACING & DIMENSIONS

SPAN (S): 12 FEET
HEIGHT (HT): 6 THRU 15 FEET

DATE EFFECTIVE: 04/01/2011
DATE PREPARED: 4/18/2011

703.17

SHEET NO.
10 OF 14

IF A SEAL IS PRESENT ON THIS SHEET IT HAS BEEN ELECTRONICALLY SEALED AND DATED.

SPAN (S) = 13 FT HEIGHT (HT) = 7 FT OR 8 FT OR 9 FT

DESIGN FILL	MEMBER THICKNESS			TOP SLAB BARS								BOTTOM SLAB BARS								WALL BARS		
				A1 BARS		J3 BARS			K2			A2 BARS		J4 BARS			K3			B2 BARS		
	TS	BS	TX	SIZE	SPA.	SIZE	SPA.	C1	HT=7'	HT=8'	HT=9'	SIZE	SPA.	SIZE	SPA.	C4	HT=7'	HT=8'	HT=9'	SIZE	SPA.	G1
1 FT	13	11	8	6	6.5	5	8.5	95.1	34.0	38.0	41.9	6	7	6	7	67.3	91	103	115	5	12	12
2 FT	13	11	8	6	6	5	6.5	95.1	34.0	38.0	41.9	6	6.5	6	6.5	59.0	91	103	115	5	12	12
4 FT	10	11	8	7	7.5	6	6	49.3	31.0	34.8	38.5	6	6	6	6.5	49.3	91	103	115	5	12	0
6 FT	10	11	8	7	7.5	6	6	45.9	34.0	38.1	42.1	7	7	6	6	45.9	91	103	115	5	12	0
8 FT	10	12	8	7	7	7	6	47.5	30.3	33.9	37.5	7	7	6	7	42.6	92	104	116	5	12	0
10 FT	11	12	8	7	6.5	7	6.5	44.3	35.8	39.9	44.1	7	6	6	6	41.0	92	104	116	5	12	0
12 FT	12	13	8	7	6	7	6.5	42.6	36.4	40.6	44.8	7	6	6	6.5	39.4	93	105	117	5	12	0
14 FT	12	14	8	7	6	7	6.5	41.0	32.5	36.3	40.0	7	6	5	6	32.8	94	106	118	5	12	0
16 FT	13	15	8	8	7.5	7	6.5	39.4	33.1	36.9	40.6	7	6	5	6	31.1	95	107	119	5	12	0
18 FT	14	16	8	8	7	7	7	37.8	34.9	38.8	42.5	8	7.5	6	8	34.5	96	108	120	5	12	0
20 FT	15	18	8	8	6.5	7	7	45.9	35.9	39.6	43.5	8	7.5	5	6	31.1	98	110	122	5	11.5	0
22 FT	17	19	8	8	7	6	6	41.0	38.0	41.9	45.9	8	7.5	6	8	34.5	99	111	123	5	9.5	0
24 FT	18	20	8	8	6.5	7	7.5	45.9	38.6	42.6	46.5	8	7	6	7.5	34.5	100	112	124	5	9.5	0
26 FT	19	21	9	8	6.5	6	6	41.3	39.3	43.3	47.3	8	7	5	6	31.4	101	113	125	5	9	0
28 FT	20	22	10	8	6.5	6	6.5	41.5	41.1	45.3	49.3	8	7	5	6	33.3	102	114	126	5	10	0
30 FT	21	23	10	8	6.5	6	6.5	41.5	41.9	45.9	50.0	8	6.5	5	6	33.3	103	115	127	5	9	0
32 FT	22	24	10	8	6	6	6	41.5	42.5	46.6	50.6	8	6.5	5	6	33.3	104	116	128	5	8	0
34 FT	23	25	11	8	6	6	6.5	41.8	43.1	47.3	51.4	8	6.5	5	6.5	33.4	105	117	129	5	8.5	0
36 FT	24	26	11	8	6	6	6.5	41.8	45.1	49.4	53.5	8	6.5	5	6	33.4	106	118	130	5	8	0
38 FT	25	27	12	8	6	6	6.5	42.0	45.9	50.0	54.3	8	6.5	5	6	33.6	107	119	131	5	8.5	0
40 FT	26	28	12	8	6	6	7	42.0	46.5	50.8	55.0	8	6.5	5	6	33.6	108	120	132	5	7.5	0
42 FT	27	29	12	9	7.5	6	7	42.0	51.3	55.9	60.4	8	6	6	8.5	37.0	109	121	133	5	7	0
44 FT	28	30	12	9	7	6	7	42.0	52.0	56.6	61.1	8	6	6	8	37.0	110	122	134	5	7	0
46 FT	29	30	12	9	7	6	7	42.0	53.9	58.5	63.1	8	6	6	7.5	37.0	110	122	134	5	7	0
48 FT	30	31	12	9	7	6	7	42.0	54.6	59.3	64.0	8	6	6	7.5	37.0	111	123	135	5	7	0
50 FT	30	32	12	9	7	6	6.5	42.0	55.0	59.6	64.4	8	6	6	7.5	37.0	112	124	136	5	7	0

SPAN (S) = 13 FT HEIGHT (HT) = 10 FT OR 11 FT OR 12 FT

DESIGN FILL	MEMBER THICKNESS			TOP SLAB BARS								BOTTOM SLAB BARS								WALL BARS		
				A1 BARS		J3 BARS			K2			A2 BARS		J4 BARS			K3			B2 BARS		
	TS	BS	TX	SIZE	SPA.	SIZE	SPA.	C1	HT=10'	HT=11'	HT=12'	SIZE	SPA.	SIZE	SPA.	C4	HT=10	HT=11	HT=12	SIZE	SPA.	G1
1 FT	12	12	9	6	6.5	5	6	95.8	33.4	36.3	39.1	6	7	6	6.5	99.0	128	140	152	5	9	12
2 FT	12	13	9	6	6	6	7	99.0	32.3	35.0	37.8	6	6.5	6	7	99.0	129	141	153	5	9	12
4 FT	10	11	9	7	7.5	6	6	72.6	34.0	37.0	40.0	7	7.5	6	6	77.5	127	139	151	5	8.5	0
6 FT	10	11	10	6	6	6	6	61.4	34.0	37.0	40.0	7	7.5	6	6	63.1	127	139	151	5	9	0
8 FT	10	12	10	7	7.5	7	6	59.8	34.3	37.3	40.3	7	7	6	6.5	59.8	128	140	152	5	9	0
10 FT	11	13	10	7	7	6	6	54.8	36.1	39.3	42.4	7	6.5	6	6.5	56.5	129	141	153	5	8.5	0
12 FT	12	14	10	7	6.5	6	6	51.5	33.9	36.8	39.6	7	6.5	6	6	53.1	130	142	154	5	8	0
14 FT	12	14	10	7	6.5	6	6	48.1	33.9	36.8	39.6	7	6	6	6	48.1	130	142	154	5	9.5	0
16 FT	13	15	10	7	6	7	7	51.5	34.4	37.3	40.1	7	6	6	6	48.1	131	143	155	5	8	0
18 FT	14	16	11	7	6	7	7.5	51.8	39.1	42.4	45.6	8	7.5	6	6.5	48.4	132	144	156	5	8.5	0
20 FT	15	18	11	8	7.5	7	7	58.5	37.0	40.0	43.0	8	7.5	6	7	46.8	134	146	158	5	7.5	0
22 FT	17	19	12	8	7.5	6	6	53.8	39.3	42.4	45.5	8	7.5	6	7	48.8	135	147	159	5	7.5	0
24 FT	18	20	12	8	7	7	7.5	58.8	39.8	42.9	46.0	8	7	6	6.5	48.8	136	148	160	5	7	0
26 FT	19	21	13	8	7	7	8	59.1	40.3	43.4	46.5	8	7	6	7	49.0	137	149	161	5	7	0
28 FT	20	22	13	8	7	7	7.5	59.1	42.4	45.6	48.9	8	7	6	6.5	49.0	138	150	162	5	6.5	0
30 FT	21	23	14	8	7	7	8	59.5	46.1	49.6	53.1	8	7	6	7	49.3	139	151	163	5	7	0
32 FT	22	24	14	8	6.5	7	7.5	59.5	46.8	50.1	53.6	8	6.5	6	6.5	49.3	140	152	164	5	6	0
34 FT	23	25	14	8	6.5	7	7	59.5	44.0	47.3	50.5	8	6.5	6	6.5	49.3	141	153	165	5	6	0
36 FT	24	26	15	8	6.5	7	7.5	59.9	49.5	53.1	56.8	8	6.5	6	6.5	49.6	142	154	166	5	6	0
38 FT	25	27	15	8	6	7	7.5	59.9	50.1	53.8	57.3	8	6.5	6	6.5	49.6	143	155	167	6	8	0
40 FT	26	28	15	8	6	7	7	59.9	50.8	54.3	57.9	8	6.5	6	6.5	49.6	144	156	168	6	8	0
42 FT	27	29	16	8	6	7	7.5	60.3	51.3	54.9	58.5	8	6	6	6.5	49.9	145	157	169	6	8	0
44 FT	28	30	16	8	6	7	7.5	60.3	53.6	57.4	61.1	8	6	6	6.5	49.9	146	158	170	6	8	0
46 FT	28	30	16	9	7	7	6.5	60.3	53.6	57.4	61.1	8	6	6	6	49.9	146	158	170	6	8	0
48 FT	29	31	17	9	7	7	7.5	60.5	54.3	58.0	61.8	8	6	6	6.5	50.1	147	159	171	6	7.5	0
50 FT	30	32	17	9	7	7	7.5	60.5	54.9	58.6	62.3	8	6	6	6.5	50.1	148	160	172	6	7.5	0

SPAN (S) = 13 FT HEIGHT (HT) = 13 FT OR 14 FT

DESIGN FILL	MEMBER THICKNESS			TOP SLAB BARS								BOTTOM SLAB BARS								WALL BARS		
				A1 BARS		J3 BARS			K2			A2 BARS		J4 BARS			K3			B2 BARS		
	TS	BS	TX	SIZE	SPA.	SIZE	SPA.	C1	HT=13'	HT=14'		SIZE	SPA.	SIZE	SPA.	C4	HT=13'	HT=14'		SIZE	SPA.	G1
1 FT	12	12	9	6	6	6	6.5	99.0	36.8	39.3		6	6.5	6	6	99.0	164	176		5	8.5	12
2 FT	12	12	9	7	8	6	6.5	99.0	36.8	39.3		6	6	6	6	99.0	164	176		5	8	12
4 FT	10	12	10	6	6	6	6	99.6	34.6	37.0		7	8	6	6	99.6	164	176		5	8	0
6 FT	11	13	10	6	6	6	6.5	84.6	35.0	37.4		6	6	6	6.5	99.6	165	177		5	7.5	0
8 FT	11	13	10	6	6	7	6.5	74.8	35.0	37.4		7	7	6	6	84.6	165	177		5	7	0
10 FT	11	13	11	7	7.5	7	6.5	68.5	35.0	37.4		7	6.5	6	6	70.1	165	177		5	7.5	0
12 FT	12	14	12	7	7	6	6.5	62.1	37.1	39.8		7	6.5	6	6.5	67.3	166	178		5	7	0
14 FT	13	15	12	7	7	6	6	62.1	37.6	40.1		7	6	6	6	65.5	167	179		5	7	0
16 FT	13	15	12	7	6.5	7	7	60.5	37.6	40.1		7	6	6	6.5	58.8	167	179		5	7	0
18 FT	14	17	13	7	6.5	7	8	59.1	38.3	40.8		7	6	6	6.5	59.1	169	181		5	6.5	0
20 FT	15	18	13	7	6	7	7	67.6	40.5	43.1		7	6	6	6	59.1	170	182		5	6.5	0
22 FT	17	19	14	7	6	7	7.5	68.0	41.1	43.8		7	6	6	6	59.5	171	183		5	6	0
24 FT	18	20	14	7	6	7	7.5	66.3	43.5	46.3		8	7.5	6	6	59.5	172	184		5	6	0
26 FT	19	21	15	8	7.5	7	7.5	66.8	43.9	46.8		8	7	6	6	58.1	173	185		6	8	0
28 FT	20	22	15	8	7	7	7	66.8	44.4	47.1		8	7	6	6	58.1	174	186		6	8	0
30 FT	21	23	16	8	7	7	7	67.1	46.8	49.6		8	7	6	6	58.5	175	187		6	8	0
32 FT	22	24	16	8	7	7	7	67.1	49.3	52.3		8	7	7	7.5	61.9	176	188		6	8	0
34 FT	23	25	17	8	6.5	7	7	67.5	47.8	50.6		8	6.5	6	6	58.9	177	189		6	7.5	0
36 FT	24	26	17	8	6.5	7	6.5	67.5	52.3	55.4		8	6.5	7	7.5	62.3	178	190		6	7.5	0
38 FT	25	27	18	8	6.5	7	7	67.9	50.8	53.8		8	6.5	6	6	59.1	179	191		6	7	0
40 FT	25	28	18	8	6	7	6	67.9	51.0	54.0		8	6.5	6	6	59.1	180	192		6	7	0
42 FT	26	29	19	8	6	7	6.5	68.3	51.5	54.5		8	6.5	6	6	59.5	181	193		6	6.5	0
44 FT	27	30	19	8	6	7	6	68.3	52.0	55.0		8	6	6	6	59.5	182	194		6	6.5	0
46 FT	28	31	20	8	6	7	6.5	68.6	52.5	55.5		8	6	6	6	59.9	183	195		6	6.5	0
48 FT	29	31	20	8	6	7	6	68.6	57.0	60.3		8	6	7	7.5	63.4	183	195		6	6.5	0
50 FT	30	32	21	9	7.5	7	7	69.0	55.4	58.5		8	6	6	6	60.1	184	196		6	6	0

SPAN (S) = 13 FT HEIGHT (HT) = 15 FT OR 16 FT

DESIGN FILL	MEMBER THICKNESS			TOP SLAB BARS								BOTTOM SLAB BARS								WALL BARS		
				A1 BARS		J3 BARS			K2			A2 BARS		J4 BARS			K3			B2 BARS		
	TS	BS	TX	SIZE	SPA.	SIZE	SPA.	C1	HT=15'	HT=16'		SIZE	SPA.	SIZE	SPA.	C4	HT=15	HT=16		SIZE	SPA.	G1
1 FT	13	13	11	6	6.5	5	6	98.5	34.1	36.3		6	6.5	6	7	100.3	189	201		5	7	12
2 FT	13	13	11	6	6.5	5	7.5	100.3	36.1	38.4		6	6.5	6	6.5	100.3	189	201		5	7	12
4 FT	10	13	11	6	6	6	6	100.3	35.6	37.8		6	6	6	6	100.3	189	201		5	6	0
6 FT	10	13	12	6	6.5	6	6	100.8	35.6	37.8		6	6	6	6	100.8	189	201		5	6	0
8 FT	11	13	12	6	6	6	6	94.1	35.9	38.0		7	7.5	6	6	100.8	189	201		6	8	0
10 FT	12	14	13	6	6	6	6.5	81.1	36.1	38.4		7	7	6	6	103.1	190	202		6	8.5	0
12 FT	13	15	14	6	6	6	6.5	74.8	38.6	40.9		7	7	6	6	85.0	191	203		5	6	0
14 FT	14	16	14	7	7.5	6	6	74.8	39.0	41.3		7	6.5	6	6	85.0	192	204		6	8	0
16 FT	14	16	14	7	7	6	6	68.0	39.0	41.3		7	6.5	6	6	73.1	192	204		5	6	0
18 FT	15	17	14	7	6.5	7	7.5	78.3	43.5	46.0		7	6	7	7	76.5	193	205		6	8	0
20 FT	16	18	15	7	6.5	7	7.5	78.6	43.9	46.4		7	6	7	8	75.3	194	206		6	8	0
22 FT	17	19	16	7	6.5	7	7.5	77.4	46.4	49.0		7	6	7	8	74.0	195	207		6	8	0
24 FT	18	20	16	7	6	7	7	77.4	46.9	49.5		8	7.5	7	7	74.0	196	208		6	8	0
26 FT	19	21	17	7	6	7	7	77.9	49.5	52.3		8	7.5	7	7	74.4	197	209		6	7.5	0
28 FT	20	23	18	7	6	7	7	78.3	48.0	50.6		8	7.5	7	7	74.9	199	211		6	7	0
30 FT	21	23	18	8	7.5	7	7	78.3	52.5	55.5		8	7	7	6.5	74.9	199	211		6	7	0
32 FT	22	24	19	8	7	7	7	78.8	53.0	55.9		8	7	7	6.5	73.5	200	212		6	6.5	0
34 FT	23	25	19	8	7	7	6	78.8	53.5	56.4		8	6.5	7	6	73.5	201	213		6	6.5	0
36 FT	24	26	20	8	7	7	6.5	79.3	54.0	56.9		8	6.5	7	6.5	73.9	202	214		6	6.5	0
38 FT	25	27	21	8	6.5	7	6.5	79.6	56.8	59.8		8	6.5	7	7	74.4	203	215		6	6	0
40 FT	25	28	22	8	6.5	7	6	78.4	57.0	60.0		8	6.5	7	7	74.8	204	216		6	6	0
42 FT	26	29	22	8	6.5	7	6	80.1	57.5	60.5		8	6.5	7	7	74.8	205	217		6	6	0
44 FT	27	30	23	8	6.5	7	6	80.5	58.0	61.0		8	6.5	7	7	75.1	206	218		7	7.5	0
46 FT	28	31	24	8	6	7	6.5	81.0	58.5	61.5		8	6	7	7	75.6	207	219		7	7.5	0
48 FT	29	31	24	8	6	7	6	81.0	61.1	64.3		8	6	7	6.5	75.6	207	219		7	7.5	0
50 FT	29	32	25	8	6	7	6	79.6	59.0	62.0		8	6	7	6.5	76.0	208	220		7	7	0

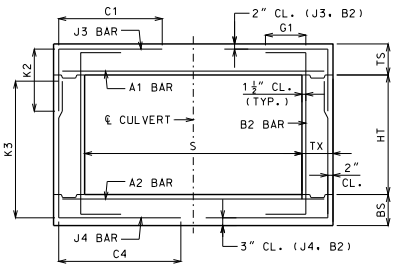

BAR DIMENSIONS DIAGRAM
SYMMETRICAL ABOUT ℄ CULVERT.

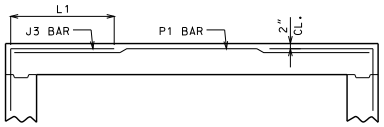

ALTERNATE J3 BAR

AT CONTRACTOR'S OPTION, ALTERNATE J3 BARS MAY BE USED WHEN THE DISTANCE BETWEEN THE ENDS OF J3 BARS IN THE TOP SLAB IS LESS THAN 2'-0". DIMENSION L1 (NOT C1) SHALL BE USED WITH ALTERNATE J3 BARS. WHERE L1 IS EQUAL TO 18", 22" AND 28" FOR #4, #5 AND #6 BARS, RESPECTIVELY. ADDITIONAL P1 BARS ARE REQUIRED WITH ALTERNATE J3 BARS WITH A LENGTH EQUAL TO A1 BARS, AND SIZE AND SPACING EQUAL TO J3 BARS. NO ADDITIONAL PAYMENT WILL BE MADE FOR THIS SUBSTITUTION.

GENERAL NOTES:

IF DESIGN FILL IS BETWEEN TABULATED DESIGN FILLS, USE THE NEXT GREATER TABULATED DESIGN FILL, EXCEPT FOR DESIGN FILLS BETWEEN 2 FEET AND 4 FEET. FOR DESIGN FILLS BETWEEN 2 FEET AND 4 FEET USE THE GREATER MEMBER THICKNESS, AREA OF REINFORCEMENT AND BAR DIMENSIONS FROM THE 2 FEET AND 4 FEET TABULATED DESIGN FILLS, AREA OF REINFORCEMENT EQUALS BAR AREA PER FOOT SPACING.

SPECIAL DESIGNS ARE REQUIRED WHEN THE DESIGN FILL IS LESS THAN 1 FOOT OR GREATER THAN 50 FEET.

DIMENSIONS ARE IN INCHES UNLESS OTHERWISE SPECIFIED.

DESIGN FILLS ARE MEASURED FROM THE TOP OF TOP SLAB TO THE TOP OF EARTH FILL OR ROADWAY.

CULVERTS MEET STRENGTH AND SERVICEABILITY REQUIREMENTS FOR THE DESIGN VEHICULAR LIVE LOAD HL-93 MINUS THE LANE LOAD.

MISSOURI HIGHWAYS AND TRANSPORTATION COMMISSION
105 WEST CAPITOL
JEFFERSON CITY, MO 65102
1-888-ASK-MODOT (1-888-275-6636)

STATE OF MISSOURI DENNIS W. HECKMAN NUMBER PE-27141 PROFESSIONAL ENGINEER
THIS SHEET HAS BEEN SIGNED, SEALED AND DATED ELECTRONICALLY.

CONCRETE SINGLE BOX CULVERT

MEMBER THICKNESS
BAR SIZE, SPACING & DIMENSIONS

SPAN (S): 13 FEET
HEIGHT (HT): 7 THRU 16 FEET

DATE EFFECTIVE: 04/01/2011
DATE PREPARED: 4/18/2011

703.17

SHEET NO.
11 OF 14

IF A SEAL IS PRESENT ON THIS SHEET IT HAS BEEN ELECTRONICALLY SEALED AND DATED.

SPAN (S) = 14 FT HEIGHT (HT) = 7 FT OR 8 FT OR 9 FT

DESIGN FILL	MEMBER THICKNESS			TOP SLAB BARS								BOTTOM SLAB BARS								WALL BARS		
				A1 BARS		J3 BARS						A2 BARS		J4 BARS						B2 BARS		
	TS	BS	TX	SIZE	SPA.	SIZE	SPA.	C1	K2 HT=7'	K2 HT=8'	K2 HT=9'	SIZE	SPA.	SIZE	SPA.	C4	K3 HT=7'	K3 HT=8'	K3 HT=9'	SIZE	SPA.	G1
1 FT	13	12	8	6	6	5	7	102.1	33.3	37.1	41.0	6	6.5	6	6.5	66.9	92	104	116	5	12	12
2 FT	13	12	8	7	8	5	6	102.1	33.3	37.1	41.0	6	6	6	6	58.1	92	104	116	5	12	12
4 FT	10	11	8	7	6.5	7	6	52.8	34.0	38.1	42.1	7	7	6	6	49.3	91	103	115	5	12	0
6 FT	11	12	8	7	7	6	6	45.8	31.6	35.4	39.0	7	7	6	7	44.0	92	104	116	5	12	0
8 FT	11	12	8	7	6.5	7	6.5	45.8	35.8	39.9	44.1	7	6	6	6	42.3	92	104	116	5	12	0
10 FT	12	13	8	7	6	7	6.5	44.0	33.3	37.1	41.0	8	7.5	6	6.5	38.8	93	105	117	5	12	0
12 FT	12	14	8	8	7	7	6	42.3	36.8	41.0	45.1	8	7	6	7	37.0	94	106	118	5	12	0
14 FT	13	16	8	8	6.5	7	6	42.3	33.5	37.3	40.9	8	7	5	6	31.6	96	108	120	5	12	0
16 FT	13	16	8	8	6.5	7	6	40.5	33.5	37.3	40.9	8	7	5	6	31.6	96	108	120	5	12	0
18 FT	15	17	8	8	6.5	7	7	45.8	35.5	39.4	43.3	8	6.5	6	7.5	35.3	97	109	121	5	12	0
20 FT	16	19	8	8	6	7	6.5	45.8	36.5	40.4	44.1	8	7	5	6	31.6	99	111	123	5	11.5	0
22 FT	18	20	8	8	6	7	7.5	45.8	38.6	42.6	46.5	8	6.5	6	7.5	35.3	100	112	124	5	9.5	0
24 FT	19	21	8	8	6	7	7	45.8	44.0	48.5	52.9	8	6.5	6	7.5	35.3	101	113	125	5	9.5	0
26 FT	21	23	9	8	6	6	6.5	42.5	41.9	45.9	50.0	8	6.5	5	6	33.6	103	115	127	5	8.5	0
28 FT	22	24	9	8	6	6	6	42.5	46.3	50.8	55.1	8	6.5	6	7	35.4	104	116	128	5	8.5	0
30 FT	23	25	10	8	6	6	6.5	42.8	43.1	47.3	51.4	8	6.5	5	6	33.9	105	117	129	5	8.5	0
32 FT	24	26	10	9	7.5	6	6	42.8	45.1	49.4	53.5	8	6	5	6	33.9	106	118	130	5	8	0
34 FT	25	27	11	9	7	6	7	43.0	45.9	50.0	54.3	8	6	5	6	34.0	107	119	131	5	8.5	0
36 FT	26	28	11	9	7	6	7	43.0	46.5	50.8	55.0	8	6	5	6	34.0	108	120	132	5	7.5	0
38 FT	27	29	11	9	7	6	7	43.0	51.3	55.9	60.4	8	6	6	7.5	37.6	109	121	133	5	7.5	0
40 FT	28	30	11	9	7	6	6.5	43.0	52.0	56.6	61.1	8	6	6	7	37.6	110	122	134	5	7.5	0
42 FT	29	31	12	9	6.5	6	7	43.3	54.3	58.9	63.6	9	7.5	6	7.5	37.8	111	123	135	5	7	0
44 FT	30	32	12	9	6.5	6	7	43.3	55.0	59.6	64.4	9	7	6	7.5	37.8	112	124	136	5	7	0
46 FT	31	33	12	9	6.5	6	7	43.3	55.8	60.5	65.1	9	7	6	7	37.8	113	125	137	5	7	0
48 FT	32	33	12	9	6.5	6	7	43.3	56.1	60.9	65.5	9	7	6	7	37.8	113	125	137	5	7	0
50 FT	33	34	12	9	6.5	6	7	43.3	58.4	63.3	68.0	9	7	6	7	37.8	114	126	138	5	6.5	0

SPAN (S) = 14 FT HEIGHT (HT) = 10 FT OR 11 FT OR 12 FT

DESIGN FILL	MEMBER THICKNESS			TOP SLAB BARS									BOTTOM SLAB BARS									WALL BARS		
				A1 BARS		J3 BARS							A2 BARS		J4 BARS							B2 BARS		
	TS	BS	TX	SIZE	SPA.	SIZE	SPA.	C1	K2 HT=10'	K2 HT=11'	K2 HT=12'		SIZE	SPA.	SIZE	SPA.	C4	K3 HT=10'	K3 HT=11'	K3 HT=12'	SIZE	SPA.	G1
1 FT	13	12	9	6	6	5	6.5	102.6	33.6	36.5	39.4		6	6	6	6	106.3	128	140	152	5	9	12
2 FT	13	12	9	7	7.5	6	6	102.6	33.6	36.5	39.4		7	7.5	6	6	106.3	128	140	152	5	8.5	12
4 FT	11	12	9	7	7	6	6.5	69.0	35.9	39.0	42.1		7	7.5	6	6	72.6	128	140	152	5	9	0
6 FT	11	12	9	7	7	6	6	60.1	35.9	39.0	42.1		7	6.5	6	6	62.0	128	140	152	5	9	0
8 FT	11	12	10	7	7	6	6	55.1	35.9	39.0	42.1		7	6.5	6	6	57.0	128	140	152	5	10	0
10 FT	12	13	10	7	6.5	6	6	53.4	36.4	39.5	42.6		7	6	6	6	53.4	129	141	153	5	9.5	0
12 FT	12	14	10	8	7.5	7	6	55.1	36.6	39.8	42.9		8	7	6	6	51.6	130	142	154	5	9	0
14 FT	14	16	10	8	7.5	7	7	53.4	39.1	42.4	45.6		8	7.5	6	6	49.9	132	144	156	5	8	0
16 FT	14	16	10	8	7	7	7	49.9	39.1	42.4	45.6		8	7	6	6.5	46.3	132	144	156	5	9	0
18 FT	15	17	11	8	7	7	7.5	59.1	39.8	42.9	46.1		8	7	6	6	46.5	133	145	157	5	9.5	0
20 FT	16	19	11	8	6.5	7	6.5	57.3	37.5	40.5	43.5		8	7	6	7	46.5	135	147	159	5	8	0
22 FT	18	20	12	8	7	7	7.5	57.6	39.8	42.9	46.0		8	7	6	6.5	46.8	136	148	160	5	8	0
24 FT	19	21	12	8	6.5	7	7	57.6	43.4	46.8	50.1		8	6.5	6	6.5	46.8	137	149	161	5	7.5	0
26 FT	20	23	13	8	6.5	7	7	57.9	41.1	44.3	47.4		8	6.5	6	7	47.0	139	151	163	5	7.5	0
28 FT	21	24	13	8	6	7	6.5	57.9	43.3	46.5	49.6		8	6.5	6	7	47.0	140	152	164	5	7	0
30 FT	22	25	14	8	6	7	6.5	58.3	43.8	47.0	50.3		8	6.5	6	7	47.4	141	153	165	5	7	0
32 FT	24	26	14	8	6	7	7.5	58.3	46.3	49.5	52.9		8	6	6	6.5	47.4	142	154	166	5	6.5	0
34 FT	25	27	14	8	6	7	7.5	58.3	46.8	50.1	53.5		8	6	6	6.5	47.4	143	155	167	5	6	0
36 FT	26	28	14	9	7.5	7	6.5	58.3	47.4	50.6	54.0		8	6	6	6.5	47.4	144	156	168	5	6	0
38 FT	27	29	15	9	7	7	7.5	58.5	51.3	54.9	58.5		8	6	6	6.5	47.6	145	157	169	6	8	0
40 FT	28	30	15	9	7	7	7.5	58.5	53.6	57.4	61.1		8	6	6	6.5	47.6	146	158	170	6	8	0
42 FT	29	31	15	9	7	7	6.5	58.5	54.3	58.0	61.8		9	7.5	6	6.5	47.6	147	159	171	6	8	0
44 FT	30	32	16	9	7	7	7.5	58.9	54.9	58.6	62.3		9	7	6	6.5	49.6	148	160	172	6	8	0
46 FT	31	33	16	9	6.5	7	7.5	58.9	55.5	59.3	62.9		9	7	6	6.5	49.6	149	161	173	6	8	0
48 FT	31	33	16	9	6.5	7	6.5	58.9	55.5	59.3	62.9		9	7	6	6	49.6	149	161	173	6	8	0
50 FT	32	34	17	9	6.5	7	7	59.3	56.1	59.9	63.5		9	7	6	6.5	50.0	150	162	174	6	7.5	0

SPAN (S) = 14 FT HEIGHT (HT) = 13 FT OR 14 FT

DESIGN FILL	MEMBER THICKNESS			TOP SLAB BARS							BOTTOM SLAB BARS								WALL BARS		
				A1 BARS		J3 BARS					A2 BARS		J4 BARS						B2 BARS		
	TS	BS	TX	SIZE	SPA.	SIZE	SPA.	C1	K2 HT=13'	K2 HT=14'	SIZE	SPA.	SIZE	SPA.	C4	K3 HT=13'	K3 HT=14'	SIZE	SPA.	G1
1 FT	12	12	10	6	6	6	7	105.0	36.8	39.3	6	6	6	6	105.0	164	176	5	8	12
2 FT	13	13	10	7	8	6	7	105.0	35.4	37.8	7	8	6	6.5	105.0	165	177	5	8	12
4 FT	11	12	10	7	7.5	6	6.5	105.0	36.5	39.0	7	7	6	6	105.0	164	176	5	8	0
6 FT	11	13	10	7	7.5	6	6	76.5	35.0	37.4	7	7	6	6	87.3	165	177	5	8	0
8 FT	11	13	11	7	7.5	6	6	66.3	35.0	37.4	7	6.5	6	6	71.6	165	177	5	7.5	0
10 FT	12	14	11	7	7	6	6	64.5	37.1	39.8	7	6	6	6	68.0	166	178	5	7.5	0
12 FT	13	15	12	7	6.5	6	6	61.3	37.6	40.1	7	6	6	6.5	64.8	167	179	5	7	0
14 FT	14	16	13	7	6.5	6	6	59.8	38.0	40.5	7	6	6	6.5	63.4	168	180	5	6.5	0
16 FT	14	16	13	7	6	7	8	59.8	38.0	40.5	8	7.5	6	6	56.1	168	180	5	7.5	0
18 FT	15	18	13	7	6	7	7	67.0	40.5	43.1	8	7.5	6	6.5	56.1	170	182	5	6.5	0
20 FT	16	19	13	8	7	7	6.5	65.1	40.9	43.5	8	7	6	6	56.1	171	183	5	6.5	0
22 FT	18	20	14	8	7	7	7	65.5	43.5	46.3	8	7	6	6	56.4	172	184	5	6	0
24 FT	19	22	14	8	7	7	7	65.5	44.1	46.9	8	7	6	6	56.4	174	186	5	6	0
26 FT	20	23	15	8	6.5	7	7	65.9	44.6	47.4	8	6.5	6	6	56.8	175	187	6	8	0
28 FT	21	24	15	8	6.5	7	6.5	65.9	45.1	47.9	8	6.5	6	6	56.8	176	188	6	8	0
30 FT	22	25	16	8	6.5	7	6.5	66.3	47.5	50.4	8	6.5	6	6	57.0	177	189	6	8	0
32 FT	23	26	16	8	6	7	6	66.3	50.0	53.0	8	6	7	8	58.9	178	190	6	8	0
34 FT	24	27	17	8	6	7	6	66.6	48.5	51.4	8	6	6	6	57.4	179	191	6	7.5	0
36 FT	25	28	17	8	6	7	6	66.6	53.0	56.1	8	6	7	8	59.3	180	192	6	7.5	0
38 FT	26	29	18	9	7.5	7	6	67.0	51.5	54.5	8	6	6	6	57.6	181	193	6	7	0
40 FT	27	30	18	9	7	7	6	67.0	54.1	57.3	8	6	7	8	61.4	182	194	6	7	0
42 FT	28	31	19	9	7	7	6	67.4	52.5	55.5	9	7.5	6	6	58.0	183	195	6	6.5	0
44 FT	29	32	19	9	7	7	6	67.4	57.3	60.5	9	7	7	8	61.8	184	196	6	6.5	0
46 FT	30	33	20	9	7	7	6.5	67.6	55.6	58.8	9	7	6	6	58.3	185	197	6	6.5	0
48 FT	31	34	20	9	6.5	7	6	67.6	58.4	61.5	9	7	7	8	62.0	186	198	6	6.5	0
50 FT	32	35	21	9	6.5	7	6.5	69.9	56.6	59.8	9	7	6	6	58.6	187	199	6	6	0

SPAN (S) = 14 FT HEIGHT (HT) = 15 FT OR 16 FT

DESIGN FILL	MEMBER THICKNESS			TOP SLAB BARS							BOTTOM SLAB BARS								WALL BARS		
				A1 BARS		J3 BARS					A2 BARS		J4 BARS						B2 BARS		
	TS	BS	TX	SIZE	SPA.	SIZE	SPA.	C1	K2 HT=15'	K2 HT=16'	SIZE	SPA.	SIZE	SPA.	C4	K3 HT=15'	K3 HT=16'	SIZE	SPA.	G1
1 FT	12	13	11	6	6	6	6	105.6	36.0	38.1	6	6	6	6.5	105.6	189	201	5	7	12
2 FT	13	14	11	6	6	6	7	105.6	38.4	40.6	6	6	6	6.5	105.6	190	202	5	7	12
4 FT	11	13	11	7	7.5	6	6	105.6	35.9	38.0	7	7.5	6	6	105.6	189	201	5	6	0
6 FT	11	13	12	6	6	6	6.5	99.0	35.9	38.0	7	7	6	6	108.0	189	201	5	6	0
8 FT	12	14	12	7	8	6	6.5	86.4	36.1	38.4	7	7	6	6	108.0	190	202	5	6	0
10 FT	12	15	13	7	7.5	6	6	74.3	36.4	38.5	7	6.5	6	6.5	90.5	191	203	5	6	0
12 FT	13	16	14	7	7	6	6	71.0	38.8	41.0	7	6.5	6	6.5	81.9	192	204	5	6	0
14 FT	14	17	14	7	6.5	7	7.5	72.8	39.1	41.4	7	6	6	6	78.3	193	205	5	6	0
16 FT	14	17	14	7	6.5	7	7.5	67.4	39.1	41.4	7	6	6	6	69.1	193	205	5	6	0
18 FT	15	18	14	7	6	7	7	76.5	43.6	46.3	8	7	7	7	72.8	194	206	5	6	0
20 FT	16	19	15	8	7.5	7	6.5	75.0	44.1	46.6	8	7	7	7.5	71.4	195	207	6	8	0
22 FT	18	20	16	8	7.5	7	7	75.5	49.0	51.8	8	7	7	7	71.8	196	208	6	8	0
24 FT	19	22	16	8	7	7	6.5	75.5	47.5	50.1	8	7	7	7	71.8	198	210	6	8	0
26 FT	20	23	17	8	7	7	6.5	75.9	48.0	50.6	8	6.5	7	7	72.1	199	211	6	7.5	0
28 FT	21	24	18	8	7	7	6.5	76.3	48.4	51.0	8	6.5	7	7	70.6	200	212	6	7	0
30 FT	22	25	18	8	6.5	7	6	76.3	51.0	53.9	8	6.5	7	6.5	70.6	201	213	6	7	0
32 FT	23	26	19	8	6.5	7	6	76.6	51.5	54.3	8	6.5	7	7	71.0	202	214	6	6.5	0
34 FT	24	27	20	8	6.5	7	6	77.1	52.0	54.8	8	6	7	7	71.5	203	215	6	6.5	0
36 FT	25	28	20	8	6	7	6	77.1	52.5	55.3	8	6	7	6.5	71.5	204	216	6	6.5	0
38 FT	26	29	21	8	6	7	6	77.5	55.3	58.1	8	6	7	7	71.9	205	217	6	6	0
40 FT	27	30	22	8	6	7	6	77.9	58.0	61.0	8	6	7	7	72.3	206	218	6	6	0
42 FT	28	31	23	8	6	7	6.5	78.3	58.5	61.5	8	6	7	7.5	72.6	207	219	7	8	0
44 FT	29	32	23	9	7.5	7	6	78.3	59.0	62.0	9	7.5	7	7	72.6	208	220	7	7.5	0
46 FT	30	33	24	9	7	7	6	78.8	61.9	65.0	9	7	7	7	73.0	209	221	7	7.5	0
48 FT	31	34	25	9	7	7	6.5	79.1	62.4	65.5	9	7	7	7	73.4	210	222	7	7.5	0
50 FT	32	35	25	9	7	7	6	79.1	62.9	66.0	9	7	7	7	73.4	211	223	7	7	0

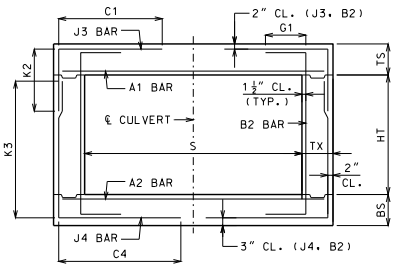

BAR DIMENSIONS DIAGRAM
SYMMETRICAL ABOUT ℄ CULVERT.

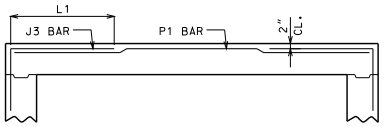

ALTERNATE J3 BAR

AT CONTRACTOR'S OPTION, ALTERNATE J3 BARS MAY BE USED WHEN THE DISTANCE BETWEEN THE ENDS OF J3 BARS IN THE TOP SLAB IS LESS THAN 2'-0". DIMENSION L1 (NOT C1) SHALL BE USED WITH ALTERNATE J3 BARS. WHERE L1 IS EQUAL TO 18", 22" AND 28" FOR #4, #5 AND #6 BARS, RESPECTIVELY. ADDITIONAL P1 BARS ARE REQUIRED WITH ALTERNATE J3 BARS WITH A LENGTH EQUAL TO A1 BARS, AND SIZE AND SPACING EQUAL TO J3 BARS. NO ADDITIONAL PAYMENT WILL BE MADE FOR THIS SUBSTITUTION.

GENERAL NOTES:

IF DESIGN FILL IS BETWEEN TABULATED DESIGN FILLS, USE THE NEXT GREATER TABULATED DESIGN FILL, EXCEPT FOR DESIGN FILLS BETWEEN 2 FEET AND 4 FEET. FOR DESIGN FILLS BETWEEN 2 FEET AND 4 FEET USE THE GREATER MEMBER THICKNESS, AREA OF REINFORCEMENT AND BAR DIMENSIONS FROM THE 2 FEET AND 4 FEET TABULATED DESIGN FILLS. AREA OF REINFORCEMENT EQUALS BAR AREA PER FOOT SPACING.

SPECIAL DESIGNS ARE REQUIRED WHEN THE DESIGN FILL IS LESS THAN 1 FOOT OR GREATER THAN 50 FEET.

DIMENSIONS ARE IN INCHES UNLESS OTHERWISE SPECIFIED.

DESIGN FILLS ARE MEASURED FROM THE TOP OF TOP SLAB TO THE TOP OF EARTH FILL OR ROADWAY.

CULVERTS MEET STRENGTH AND SERVICEABILITY REQUIREMENTS FOR THE DESIGN VEHICULAR LIVE LOAD HL-93 MINUS THE LANE LOAD.

MISSOURI HIGHWAYS AND TRANSPORTATION COMMISSION
105 WEST CAPITOL
JEFFERSON CITY, MO 65102
1-888-ASK-MODOT (1-888-275-6636)

STATE OF MISSOURI DENNIS W. HECKMAN NUMBER PE-27141 PROFESSIONAL ENGINEER
THIS SHEET HAS BEEN SIGNED, SEALED AND DATED ELECTRONICALLY.

CONCRETE SINGLE BOX CULVERT

MEMBER THICKNESS
BAR SIZE, SPACING & DIMENSIONS

SPAN (S): 14 FEET
HEIGHT (HT): 7 THRU 16 FEET

DATE EFFECTIVE: 04/01/2011
DATE PREPARED: 4/18/2011

703.17

SHEET NO.
12 OF 14

IF A SEAL IS PRESENT ON THIS SHEET IT HAS BEEN ELECTRONICALLY SEALED AND DATED.

SPAN (S) = 15 FT HEIGHT (HT) = 8 FT OR 9 FT OR 10 FT

DESIGN FILL	MEMBER THICKNESS			TOP SLAB BARS									BOTTOM SLAB BARS									WALL BARS		
				A1 BARS		J3 BARS							A2 BARS		J4 BARS							B2 BARS		
	TS	BS	TX	SIZE	SPA.	SIZE	SPA.	C1	K2				SIZE	SPA.	SIZE	SPA.	C4	K3				SIZE	SPA.	G1
									HT=8'	HT=9'	HT=10'							HT=8'	HT=9'	HT=10'				
1 FT	12	13	8	7	7	6	7	109.0	32.5	35.9	39.3		6	6	6	7	82.8	105	117	129		5	12	12
2 FT	12	13	8	7	6.5	6	6.5	109.0	33.6	37.1	40.6		7	7.5	6	6.5	65.8	105	117	129		5	12	12
4 FT	11	12	8	7	6	6	6	52.6	35.4	39.0	42.8		7	7	6	6	52.6	104	116	128		5	12	0
6 FT	11	12	9	7	6.5	6	6	51.0	35.4	39.0	42.8		7	6.5	6	6	49.1	104	116	128		5	12	0
8 FT	11	12	9	7	6	7	6	51.0	35.4	39.0	42.8		8	7.5	6	6	47.3	104	116	128		5	12	0
10 FT	12	14	9	8	7.5	7	6	49.1	32.8	36.1	39.5		8	7	6	7	43.5	106	118	130		5	12	0
12 FT	13	15	9	8	6.5	7	6.5	47.3	34.5	38.0	41.5		8	6.5	6	7	41.6	107	119	131		5	12	0
14 FT	14	17	9	8	6.5	7	6.5	45.4	34.1	37.5	40.9		8	6.5	6	8	39.8	109	121	133		5	12	0
16 FT	14	17	9	8	6	7	6	43.5	34.1	37.5	40.9		8	6.5	6	8	37.8	109	121	133		5	12	0
18 FT	16	19	9	8	6	7	7	49.1	36.5	40.0	43.5		8	6.5	6	8	37.8	111	123	135		5	12	0
20 FT	17	20	9	9	7.5	7	6	49.1	37.1	40.6	44.1		8	6.5	6	7.5	37.8	112	124	136		5	11	0
22 FT	19	21	9	9	7.5	7	7	49.1	43.3	47.3	51.1		8	6	6	7	37.8	113	125	137		5	9	0
24 FT	21	23	10	8	6	6	6	43.8	41.9	45.6	49.3		8	6	6	8	38.0	115	127	139		5	9	0
26 FT	22	24	11	9	7.5	6	6	43.9	42.5	46.3	49.9		8	6	6	8	38.3	116	128	140		5	10.5	0
28 FT	23	25	11	9	7	6	6	43.9	43.1	46.8	50.5		8	6	6	8	38.3	117	129	141		5	9	0
30 FT	24	26	11	9	7	7	7.5	49.6	49.4	53.5	57.8		9	7.5	6	7	38.3	118	130	142		5	8	0
32 FT	26	28	12	9	7	6	6.5	46.1	46.4	50.3	54.1		8	6	6	8.5	38.4	120	132	144		5	8	0
34 FT	27	29	12	9	7	6	6.5	46.1	51.5	55.6	59.9		9	7.5	6	8	38.4	121	133	145		5	7.5	0
36 FT	28	30	12	9	6.5	6	6.5	46.1	52.1	56.4	60.5		9	7	6	8	38.4	122	134	146		5	7	0
38 FT	29	31	12	9	6.5	6	6	46.1	54.4	58.6	63.0		9	7	6	7.5	38.4	123	135	147		5	7	0
40 FT	30	32	13	9	6.5	6	6.5	46.4	55.1	59.4	63.8		9	7	6	7.5	40.5	124	136	148		5	6.5	0
42 FT	31	33	13	9	6.5	6	6.5	46.4	55.8	60.1	64.5		9	7	6	7	40.5	125	137	149		5	6.5	0
44 FT	32	34	13	9	6	6	6.5	46.4	56.5	60.9	65.1		9	6.5	6	7	40.5	126	138	150		5	6.5	0
46 FT	33	35	13	9	6	6	6.5	46.4	57.3	61.5	65.9		9	6.5	6	6.5	40.5	127	139	151		5	6.5	0
48 FT	34	36	13	9	6	6	6.5	46.4	59.6	64.0	68.5		9	6.5	6	6.5	40.5	128	140	152		5	6.5	0
50 FT	35	36	13	9	6	6	6.5	46.4	60.0	64.4	68.9		9	6.5	6	6	40.5	128	140	152		5	6	0

SPAN (S) = 15 FT HEIGHT (HT) = 14 FT OR 15 FT OR 16 FT

DESIGN FILL	MEMBER THICKNESS			TOP SLAB BARS									BOTTOM SLAB BARS									WALL BARS		
				A1 BARS		J3 BARS							A2 BARS		J4 BARS							B2 BARS		
	TS	BS	TX	SIZE	SPA.	SIZE	SPA.	C1	K2				SIZE	SPA.	SIZE	SPA.	C4	K3				SIZE	SPA.	G1
									HT=14'	HT=15'	HT=16'							HT=14'	HT=15'	HT=16'				
1 FT	13	14	11	7	8	6	7.5	112.8	36.1	38.4	40.6		7	8	6	7	112.8	178	190	202		5	7.5	12
2 FT	13	14	11	7	7.5	6	6.5	112.8	38.0	40.4	42.8		7	7.5	6	6.5	112.8	178	190	202		5	7	12
4 FT	12	13	11	7	7	6	6.5	112.8	37.6	40.0	42.4		7	7	6	6	112.8	177	189	201		5	6.5	0
6 FT	12	13	12	7	7.5	6	6.5	92.1	37.6	40.0	42.4		7	6.5	6	6	97.9	177	189	201		5	6.5	0
8 FT	12	14	13	7	7.5	6	6	77.3	37.8	40.3	42.6		7	6.5	6	6	84.9	178	190	202		5	6.5	0
10 FT	13	15	13	7	6.5	6	6	73.4	38.3	40.6	43.0		7	6	6	6	81.0	179	191	203		5	6.5	0
12 FT	14	16	14	7	6.5	7	8	73.8	38.6	41.0	43.4		8	7.5	6	6	75.6	180	192	204		5	6	0
14 FT	15	17	14	7	6	7	7	81.5	41.0	43.5	46.0		8	7	7	7.5	75.6	181	193	205		5	6	0
16 FT	16	18	15	8	7.5	7	7	80.0	45.3	48.1	50.9		8	7	7	7	74.1	182	194	206		6	8	0
18 FT	16	19	15	8	7	7	7	74.1	41.6	44.1	46.6		8	7	7	7.5	70.3	183	195	207		6	8	0
20 FT	17	20	15	8	7	7	6	74.1	46.0	48.8	51.5		8	6.5	7	7	68.3	184	196	208		6	8	0
22 FT	19	21	15	8	6.5	7	6	74.1	50.8	53.8	56.8		8	6	7	6	68.3	185	197	209		6	8	0
24 FT	20	23	16	8	6.5	7	6	74.5	47.4	50.1	52.9		8	6	7	6.5	68.6	187	199	211		6	8	0
26 FT	21	24	17	8	6	7	6	72.9	49.9	52.8	55.6		8	6	7	7	69.0	188	200	212		6	7.5	0
28 FT	23	25	17	8	6	7	6	72.9	54.9	58.0	61.1		8	6	7	6	69.0	189	201	213		6	7.5	0
30 FT	24	27	18	8	6	7	6	73.3	51.4	54.3	57.1		8	6	7	6.5	69.3	191	203	215		6	7	0
32 FT	25	28	19	8	6	7	6	73.6	49.6	52.5	55.3		8	6	7	7	69.6	192	204	216		6	6.5	0
34 FT	26	29	20	8	6	7	6	74.0	52.4	55.3	58.1		9	7.5	7	7	68.0	193	205	217		6	6.5	0
36 FT	27	30	21	9	7.5	7	6	74.4	52.8	55.6	58.5		9	7	7	7.5	68.4	194	206	218		6	6.5	0
38 FT	28	31	21	9	7	7	6	74.4	55.5	58.5	61.5		9	7	7	7	68.4	195	207	219		6	6	0
40 FT	29	32	22	9	7	7	6	74.8	60.5	63.8	67.0		9	7	7	7	68.6	196	208	220		6	6	0
42 FT	30	33	23	9	7	7	6	77.1	61.0	64.3	67.5		9	7	7	7	69.0	197	209	221		6	6	0
44 FT	31	34	24	9	6.5	7	6	77.5	61.5	64.8	68.0		9	6.5	7	7	69.4	198	210	222		6	6	0
46 FT	32	35	24	9	6.5	7	6	77.5	62.1	65.4	68.6		9	6.5	7	7	69.4	199	211	223		7	8	0
48 FT	33	36	25	9	6.5	7	6	77.9	65.0	68.4	71.6		9	6.5	7	7	69.8	200	212	224		7	8	0
50 FT	34	37	25	9	6.5	7	6	77.9	65.5	68.9	72.3		9	6.5	7	7	71.8	201	213	225		7	7.5	0

SPAN (S) = 15 FT HEIGHT (HT) = 11 FT OR 12 FT OR 13 FT

DESIGN FILL	MEMBER THICKNESS			TOP SLAB BARS									BOTTOM SLAB BARS									WALL BARS		
				A1 BARS		J3 BARS							A2 BARS		J4 BARS							B2 BARS		
	TS	BS	TX	SIZE	SPA.	SIZE	SPA.	C1	K2				SIZE	SPA.	SIZE	SPA.	C4	K3				SIZE	SPA.	G1
									HT=11'	HT=12'	HT=13'							HT=11'	HT=12'	HT=13'				
1 FT	12	12	9	7	7	6	6.5	109.6	36.3	39.1	42.0		7	7	6	6	109.6	140	152	164		5	8.5	12
2 FT	13	14	9	7	7	6	6.5	109.6	38.5	41.5	44.5		7	7.5	6	6	109.6	142	154	166		5	8.5	12
4 FT	11	12	10	7	6.5	6	6	74.1	36.0	38.9	41.8		7	7	6	6	76.0	140	152	164		5	8	0
6 FT	12	13	10	7	7	6	6.5	64.6	36.5	39.4	42.3		7	6.5	6	6.5	68.4	141	153	165		5	8	0
8 FT	12	13	10	7	6.5	6	6	58.9	36.5	39.4	42.3		7	6	6	6	62.8	141	153	165		5	8	0
10 FT	13	14	10	7	6	7	7	58.9	38.5	41.5	44.5		8	7	6	6	58.9	142	154	166		5	8	0
12 FT	13	15	10	8	7	7	6	57.0	38.8	41.8	44.8		8	6.5	7	6.5	58.9	143	155	167		5	8	0
14 FT	14	17	11	8	7	7	6.5	57.3	39.5	42.5	45.5		8	6.5	6	6	53.5	145	157	169		5	7.5	0
16 FT	14	17	11	8	6.5	7	6	53.5	39.5	42.5	45.5		8	6.5	6	6	49.6	145	157	169		5	8.5	0
18 FT	16	19	12	8	6.5	7	7	61.5	40.5	43.5	46.5		8	6.5	6	6.5	49.9	147	159	171		5	8.5	0
20 FT	17	20	12	8	6	7	6	61.5	41.0	44.0	47.0		8	6.5	6	6	49.9	148	160	172		5	7.5	0
22 FT	19	22	13	8	6.5	7	7	61.8	43.6	46.8	49.9		8	6.5	6	6.5	50.1	150	162	174		5	7.5	0
24 FT	20	23	13	8	6	7	6.5	59.9	44.3	47.4	50.5		8	6	6	6	50.1	151	163	175		5	6.5	0
26 FT	21	24	14	8	6	7	6	62.1	46.5	49.6	52.9		8	6	6	6.5	50.5	152	164	176		5	7	0
28 FT	23	25	14	8	6	7	7	60.1	47.3	50.5	53.8		8	6	6	6	50.5	153	165	177		5	6	0
30 FT	24	27	15	9	7.5	7	7	60.5	48.0	51.3	54.5		8	6	6	6.5	50.8	155	167	179		5	6	0
32 FT	25	28	15	9	7	7	6.5	60.5	50.4	53.8	57.1		8	6	6	6	50.8	156	168	180		6	8	0
34 FT	26	29	15	9	7	7	6	60.5	51.0	54.4	57.6		9	7.5	6	6	50.8	157	169	181		6	8	0
36 FT	27	30	16	9	7	7	6	60.8	51.5	54.9	58.3		9	7	6	6	51.0	158	170	182		6	8	0
38 FT	28	31	16	9	6.5	7	6	60.8	52.1	55.5	58.8		9	7	6	6	51.0	159	171	183		6	8	0
40 FT	29	32	17	9	6.5	7	6	61.1	54.5	58.0	61.5		9	7	6	6	51.3	160	172	184		6	7.5	0
42 FT	31	33	17	9	6.5	7	7	61.1	55.4	58.9	62.4		9	7	6	6	51.3	161	173	185		6	7.5	0
44 FT	32	34	17	9	6.5	7	6.5	61.1	57.9	61.5	65.1		9	6.5	6	6	51.3	162	174	186		6	7.5	0
46 FT	33	35	17	9	6	7	6	61.1	58.5	62.1	65.8		9	6.5	6	6	53.3	163	175	187		6	7.5	0
48 FT	34	36	18	9	6	7	7	61.4	59.1	62.8	66.3		9	6.5	6	6	53.5	164	176	188		6	7	0
50 FT	34	37	18	9	6	7	6	61.4	59.4	63.0	66.6		9	6.5	6	6	53.5	165	177	189		6	7	0

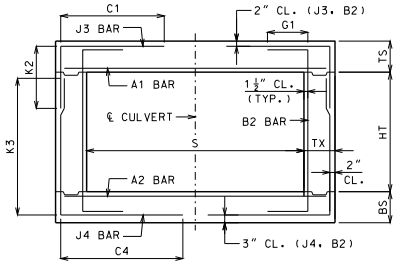

BAR DIMENSIONS DIAGRAM
SYMMETRICAL ABOUT ℄ CULVERT.

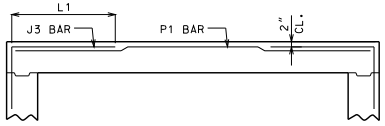

ALTERNATE J3 BAR

AT CONTRACTOR'S OPTION, ALTERNATE J3 BARS MAY BE USED WHEN THE DISTANCE BETWEEN THE ENDS OF J3 BARS IN THE TOP SLAB IS LESS THAN 2'-0". DIMENSION L1 (NOT C1) SHALL BE USED WITH ALTERNATE J3 BARS. WHERE L1 IS EQUAL TO 18", 22" AND 28" FOR #4, #5 AND #6 BARS, RESPECTIVELY. ADDITIONAL P1 BARS ARE REQUIRED WITH ALTERNATE J3 BARS WITH A LENGTH EQUAL TO A1 BARS, AND SIZE AND SPACING EQUAL TO J3 BARS. NO ADDITIONAL PAYMENT WILL BE MADE FOR THIS SUBSTITUTION.

GENERAL NOTES:

IF DESIGN FILL IS BETWEEN TABULATED DESIGN FILLS, USE THE NEXT GREATER TABULATED DESIGN FILL, EXCEPT FOR DESIGN FILLS BETWEEN 2 FEET AND 4 FEET. FOR DESIGN FILLS BETWEEN 2 FEET AND 4 FEET USE THE GREATER MEMBER THICKNESS, AREA OF REINFORCEMENT AND BAR DIMENSIONS FROM THE 2 FEET AND 4 FEET TABULATED DESIGN FILLS. AREA OF REINFORCEMENT EQUALS BAR AREA PER FOOT SPACING.

SPECIAL DESIGNS ARE REQUIRED WHEN THE DESIGN FILL IS LESS THAN 1 FOOT OR GREATER THAN 50 FEET.

DIMENSIONS ARE IN INCHES UNLESS OTHERWISE SPECIFIED.

DESIGN FILLS ARE MEASURED FROM THE TOP OF TOP SLAB TO THE TOP OF EARTH FILL OR ROADWAY.

CULVERTS MEET STRENGTH AND SERVICEABILITY REQUIREMENTS FOR THE DESIGN VEHICULAR LIVE LOAD HL-93 MINUS THE LANE LOAD.

MISSOURI HIGHWAYS AND TRANSPORTATION COMMISSION
105 WEST CAPITOL
JEFFERSON CITY, MO 65102
1-888-ASK-MODOT (1-888-275-6636)

DENNIS W. HECKMAN NUMBER PE-27141 STATE OF MISSOURI PROFESSIONAL ENGINEER
THIS SHEET HAS BEEN SIGNED, SEALED AND DATED ELECTRONICALLY.

CONCRETE SINGLE BOX CULVERT

MEMBER THICKNESS
BAR SIZE, SPACING & DIMENSIONS

SPAN (S): 15 FEET
HEIGHT (HT): 8 THRU 16 FEET

DATE EFFECTIVE: 04/01/2011
DATE PREPARED: 4/18/2011

703.17

SHEET NO.
13 OF 14

IF A SEAL IS PRESENT ON THIS SHEET IT HAS BEEN ELECTRONICALLY SEALED AND DATED.

SPAN (S) = 16 FT HEIGHT (HT) = 8 FT OR 9 FT OR 10 FT

DESIGN FILL	MEMBER THICKNESS			TOP SLAB BARS									BOTTOM SLAB BARS									WALL BARS		
				A1 BARS		J3 BARS							A2 BARS		J4 BARS							B2 BARS		
	TS	BS	TX	SIZE	SPA.	SIZE	SPA.	C1	K2 HT=8'	K2 HT=9'	K2 HT=10'		SIZE	SPA.	SIZE	SPA.	C4	K3 HT=8'	K3 HT=9'	K3 HT=10'		SIZE	SPA.	G1
1 FT	12	13	8	7	6.5	6	6.5	116.0	37.1	41.0	44.8		7	7.5	6	6.5	76.0	105	117	129		5	12	12
2 FT	12	13	8	7	6	6	6	116.0	37.1	41.0	44.8		7	7	6	6	64.0	105	117	129		5	12	12
4 FT	12	12	9	7	6.5	6	6.5	54.3	36.8	40.6	44.5		7	6.5	6	6	54.3	104	116	128		5	12	0
6 FT	12	12	9	7	6	6	6.5	50.3	36.8	40.6	44.5		7	6	6	6	50.3	104	116	128		5	12	0
8 FT	12	13	9	8	7.5	7	6.5	50.3	37.1	41.0	44.8		8	7	6	6	46.3	105	117	129		5	12	0
10 FT	13	14	9	8	6.5	7	6.5	48.3	37.8	41.6	45.5		8	6.5	6	6	44.3	106	118	130		5	12	0
12 FT	14	16	9	8	6.5	7	6.5	46.3	35.1	38.6	42.0		8	6.5	6	7.5	40.3	108	120	132		5	12	0
14 FT	15	18	9	8	6	7	6	52.3	36.0	39.5	42.9		8	6	6	8	38.3	110	122	134		5	12	0
16 FT	16	19	9	9	7	7	6	50.3	36.5	40.0	43.5		8	6	6	7.5	38.3	111	123	135		5	12	0
18 FT	17	20	9	9	7	7	6.5	50.3	37.1	40.6	44.1		8	6	6	8	38.3	112	124	136		5	12	0
20 FT	19	21	9	9	7	7	7	50.3	39.3	42.9	46.5		8	6	6	7.5	38.3	113	125	137		5	10.5	0
22 FT	20	23	9	9	6.5	7	6.5	50.3	40.3	43.8	47.4		8	6	6	7.5	38.3	115	127	139		5	9	0
24 FT	22	24	10	9	7	7	7.5	50.5	42.5	46.3	49.9		9	7.5	6	7.5	38.4	116	128	140		5	9.5	0
26 FT	23	25	10	9	6.5	7	7	50.5	47.3	51.4	55.4		9	7	6	7	38.4	117	129	141		5	8.5	0
28 FT	25	27	11	9	6.5	6	6	46.8	45.8	49.6	53.5		9	7	6	8	40.6	119	131	143		5	8.5	0
30 FT	26	28	11	9	6.5	6	6	46.8	46.4	50.3	54.1		9	7	6	8	40.6	120	132	144		5	7.5	0
32 FT	28	29	11	9	6.5	6	6.5	46.8	53.3	57.6	61.9		9	7	6	7	40.6	121	133	145		5	7.5	0
34 FT	29	31	12	9	6.5	6	6.5	46.9	54.4	58.6	63.0		9	7	6	7.5	40.8	123	135	147		5	7	0
36 FT	30	32	12	9	6	6	6.5	46.9	55.1	59.4	63.8		9	6.5	6	7.5	40.8	124	136	148		5	7	0
38 FT	31	33	12	9	6	6	6.5	46.9	55.8	60.1	64.5		9	6.5	6	7	40.8	125	137	149		5	7	0
40 FT	32	34	12	9	6	6	6.5	46.9	56.5	60.9	65.1		9	6.5	6	7	40.8	126	138	150		5	7	0
42 FT	33	35	12	9	6	6	6	46.9	57.3	61.5	65.9		9	6.5	6	6.5	40.8	127	139	151		5	6.5	0
44 FT	34	36	13	10	7.5	6	6.5	47.1	59.6	64.0	68.5		9	6	6	6.5	41.0	128	140	152		5	6.5	0
46 FT	35	37	13	10	7	6	6	47.1	60.3	64.8	69.3		9	6	6	6.5	41.0	129	141	153		5	6.5	0
48 FT	36	38	13	10	7	6	6.5	47.1	61.0	65.5	69.9		9	6	6	6	41.0	130	142	154		5	6	0
50 FT	37	39	13	10	7	6	6	47.1	61.8	66.3	70.6		9	6	6	6	41.0	131	143	155		6	8.5	0

SPAN (S) = 16 FT HEIGHT (HT) = 14 FT OR 15 FT OR 16 FT

DESIGN FILL	MEMBER THICKNESS			TOP SLAB BARS									BOTTOM SLAB BARS									WALL BARS		
				A1 BARS		J3 BARS							A2 BARS		J4 BARS							B2 BARS		
	TS	BS	TX	SIZE	SPA.	SIZE	SPA.	C1	K2 HT=14'	K2 HT=15'	K2 HT=16'		SIZE	SPA.	SIZE	SPA.	C4	K3 HT=14'	K3 HT=15'	K3 HT=16'		SIZE	SPA.	G1
1 FT	13	14	11	7	7.5	6	7	117.8	38.0	40.4	42.8		7	7.5	6	6.5	117.8	178	190	202		5	7.5	12
2 FT	13	14	11	7	7	7	7.5	121.8	38.0	40.4	42.8		7	7	6	6.5	117.8	178	190	202		5	7	12
4 FT	12	14	11	7	6.5	6	6	117.8	37.8	40.3	42.6		7	6.5	6	6	117.8	178	190	202		5	6.5	0
6 FT	12	14	12	7	6.5	6	6	83.6	37.8	40.3	42.6		7	6.5	6	6	95.9	178	190	202		5	7	0
8 FT	12	14	13	7	6.5	7	6.5	77.9	37.8	40.3	42.6		7	6	6	6	80.0	178	190	202		5	6.5	0
10 FT	13	16	13	7	6	7	6.5	75.9	38.4	40.8	43.3		8	7.5	6	6	77.9	180	192	204		5	6.5	0
12 FT	14	17	14	7	6	7	6.5	72.1	40.8	43.3	45.8		8	7	7	8	76.3	181	193	205		5	6	0
14 FT	16	18	14	8	7	7	6.5	78.3	45.3	48.1	50.9		8	6.5	7	7	74.1	182	194	206		5	6	0
16 FT	17	19	15	8	7	7	6.5	78.6	47.8	50.6	53.5		8	6.5	7	6.5	72.5	183	195	207		6	8	0
18 FT	17	20	15	8	6.5	7	6.5	72.5	42.0	44.5	47.0		8	6	7	7.5	66.3	184	196	208		6	8	0
20 FT	19	21	15	8	6.5	7	6	72.5	50.8	53.8	56.8		8	6	7	6.5	66.3	185	197	209		6	8	0
22 FT	20	23	16	8	6	7	6	72.8	45.4	48.0	50.6		8	6	7	7	66.5	187	199	211		6	8	0
24 FT	22	24	16	8	6	7	6	72.8	52.3	55.3	58.3		9	7.5	7	6.5	66.5	188	200	212		6	8	0
26 FT	23	26	17	8	6	7	6	73.1	50.9	53.8	56.6		9	7.5	7	7	66.9	190	202	214		6	7.5	0
28 FT	24	27	18	9	7	7	6	73.5	51.4	54.3	57.1		9	7	7	7	67.3	191	203	215		6	7	0
30 FT	26	28	18	9	7	7	6	73.5	56.4	59.5	62.6		9	7	7	6.5	67.3	192	204	216		6	7	0
32 FT	27	30	19	9	7	7	6	73.9	55.0	58.0	61.0		9	7	7	7	67.5	194	206	218		6	6.5	0
34 FT	28	31	20	9	7	7	6	74.3	55.5	58.5	61.5		9	7	7	7	67.9	195	207	219		6	6.5	0
36 FT	29	32	21	9	6.5	7	6	74.5	53.8	56.6	59.5		9	6.5	7	7	68.1	196	208	220		6	6.5	0
38 FT	30	33	22	9	6.5	7	6	74.9	61.0	64.3	67.5		9	6.5	7	7	68.5	197	209	221		6	6.5	0
40 FT	31	34	22	9	6.5	7	6	74.9	61.5	64.8	68.0		9	6.5	7	7	68.5	198	210	222		6	6	0
42 FT	32	35	23	9	6.5	7	6	75.3	62.1	65.4	68.6		9	6.5	7	7	68.8	199	211	223		6	6	0
44 FT	34	36	23	9	6	7	6	75.3	65.3	68.6	72.0		9	6	7	6.5	68.8	200	212	224		7	8	0
46 FT	35	37	24	9	6	7	6	75.6	65.8	69.1	72.5		9	6	7	6.5	69.1	201	213	225		6	6	0
48 FT	36	38	24	9	6	7	6	75.6	66.4	69.8	73.1		9	6	7	7	69.1	202	214	226		7	7.5	0
50 FT	37	39	25	9	6	7	6	76.0	69.3	72.8	76.3		9	6	7	7	69.5	203	215	227		7	7.5	0

SPAN (S) = 16 FT HEIGHT (HT) = 11 FT OR 12 FT OR 13 FT

DESIGN FILL	MEMBER THICKNESS			TOP SLAB BARS									BOTTOM SLAB BARS									WALL BARS		
				A1 BARS		J3 BARS							A2 BARS		J4 BARS							B2 BARS		
	TS	BS	TX	SIZE	SPA.	SIZE	SPA.	C1	K2 HT=11'	K2 HT=12'	K2 HT=13'		SIZE	SPA.	SIZE	SPA.	C4	K3 HT=11'	K3 HT=12'	K3 HT=13'		SIZE	SPA.	G1
1 FT	12	14	9	7	6.5	6	6	116.6	36.8	39.6	42.5		7	7.5	6	6	116.6	142	154	166		5	8.5	12
2 FT	13	14	10	7	7	6	7	117.1	38.5	41.5	44.5		7	7.5	6	6	101.0	142	154	166		5	8.5	12
4 FT	12	13	10	7	6.5	6	6.5	72.8	36.5	39.4	42.3		7	6.5	6	6.5	74.8	141	153	165		5	8.5	0
6 FT	12	13	10	7	6	6	6	62.6	36.5	39.4	42.3		7	6	6	6	64.6	141	153	165		5	8.5	0
8 FT	12	14	10	7	6	7	6	62.6	36.8	39.6	42.5		8	7.5	6	6	60.6	142	154	166		5	8.5	0
10 FT	13	15	11	8	7.5	7	6.5	60.9	37.3	40.1	43.0		8	7	6	6.5	56.9	143	155	167		5	9	0
12 FT	14	16	11	8	6.5	7	6.5	58.9	39.3	42.3	45.3		8	6.5	6	6	54.8	144	156	168		5	8.5	0
14 FT	15	17	11	8	6	7	6	65.0	46.1	49.6	53.1		8	6	7	7	56.9	145	157	169		5	8	0
16 FT	16	19	12	8	6	7	6	65.3	40.5	43.5	46.5		8	6	6	6	53.0	147	159	171		5	8	0
18 FT	17	20	12	8	6	7	6.5	61.3	41.0	44.0	47.0		8	6	6	6.5	49.0	148	160	172		5	9	0
20 FT	19	21	12	8	6	7	6.5	59.1	43.4	46.5	49.6		8	6	6	6	49.0	149	161	173		5	7.5	0
22 FT	20	23	13	9	7.5	7	6.5	61.5	44.3	47.4	50.5		8	6	6	6.5	49.3	151	163	175		5	8	0
24 FT	22	24	13	9	7	7	6.5	59.5	46.8	50.0	53.3		9	7.5	6	6	49.3	152	164	176		5	6.5	0
26 FT	23	26	14	9	7	7	6.5	59.8	47.5	50.8	54.0		9	7.5	6	6.5	49.5	154	166	178		5	7	0
28 FT	24	27	14	9	7	7	6.5	59.8	48.0	51.3	54.5		9	7	6	6	49.5	155	167	179		5	6	0
30 FT	26	28	14	9	6.5	7	6	59.8	50.6	54.0	57.4		9	7	6	6	49.5	156	168	180		5	6	0
32 FT	27	29	15	9	6.5	7	6.5	60.0	51.3	54.6	58.0		9	7	6	6	49.6	157	169	181		5	6	0
34 FT	28	31	15	9	6.5	7	6	60.0	52.1	55.5	58.8		9	7	6	6	49.6	159	171	183		6	8	0
36 FT	29	32	16	9	6.5	7	6.5	60.4	54.5	58.0	61.5		9	6.5	6	6	49.9	160	172	184		6	8	0
38 FT	30	33	16	9	6	7	6	60.4	55.1	58.6	62.0		9	6.5	6	6	49.9	161	173	185		6	8	0
40 FT	32	34	16	9	6	7	6.5	60.4	57.9	61.5	65.1		9	6.5	6	6	49.9	162	174	186		6	8	0
42 FT	33	35	17	9	6	7	7	60.6	58.5	62.1	65.8		9	6.5	6	6	50.1	163	175	187		6	7.5	0
44 FT	34	36	17	9	6	7	7	60.6	59.1	62.8	66.3		9	6	6	6	50.1	164	176	188		6	7.5	0
46 FT	35	37	17	10	7.5	7	6.5	60.6	59.8	63.3	66.9		9	6	6	6	50.1	165	177	189		6	7.5	0
48 FT	36	38	18	10	7	7	7	60.9	60.3	63.9	67.5		9	6	6	6	52.5	166	178	190		6	7	0
50 FT	37	39	18	10	7	7	7	60.9	62.9	66.6	70.4		9	6	6	6	52.5	167	179	191		6	7	0

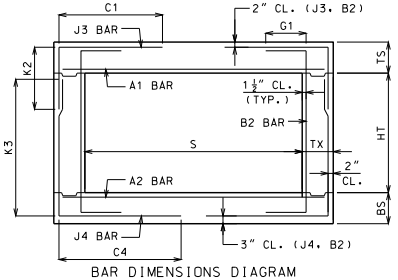

BAR DIMENSIONS DIAGRAM
SYMMETRICAL ABOUT ℄ CULVERT.

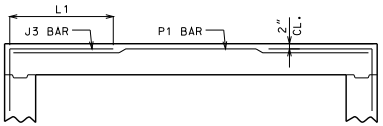

ALTERNATE J3 BAR

AT CONTRACTOR'S OPTION, ALTERNATE J3 BARS MAY BE USED WHEN THE DISTANCE BETWEEN THE ENDS OF J3 BARS IN THE TOP SLAB IS LESS THAN 2'-0". DIMENSION L1 (NOT C1) SHALL BE USED WITH ALTERNATE J3 BARS. WHERE L1 IS EQUAL TO 18", 22" AND 28" FOR #4, #5 AND #6 BARS, RESPECTIVELY. ADDITIONAL P1 BARS ARE REQUIRED WITH ALTERNATE J3 BARS WITH A LENGTH EQUAL TO A1 BARS, AND SIZE AND SPACING EQUAL TO J3 BARS. NO ADDITIONAL PAYMENT WILL BE MADE FOR THIS SUBSTITUTION.

GENERAL NOTES:

IF DESIGN FILL IS BETWEEN TABULATED DESIGN FILLS, USE THE NEXT GREATER TABULATED DESIGN FILL, EXCEPT FOR DESIGN FILLS BETWEEN 2 FEET AND 4 FEET. FOR DESIGN FILLS BETWEEN 2 FEET AND 4 FEET USE THE GREATER MEMBER THICKNESS, AREA OF REINFORCEMENT AND BAR DIMENSIONS FROM THE 2 FEET AND 4 FEET TABULATED DESIGN FILLS. AREA OF REINFORCEMENT EQUALS BAR AREA PER FOOT SPACING.

SPECIAL DESIGNS ARE REQUIRED WHEN THE DESIGN FILL IS LESS THAN 1 FOOT OR GREATER THAN 50 FEET.

DIMENSIONS ARE IN INCHES UNLESS OTHERWISE SPECIFIED.

DESIGN FILLS ARE MEASURED FROM THE TOP OF TOP SLAB TO THE TOP OF EARTH FILL OR ROADWAY.

CULVERTS MEET STRENGTH AND SERVICEABILITY REQUIREMENTS FOR THE DESIGN VEHICULAR LIVE LOAD HL-93 MINUS THE LANE LOAD.

MISSOURI HIGHWAYS AND TRANSPORTATION COMMISSION
105 WEST CAPITOL
JEFFERSON CITY, MO 65102
1-888-ASK-MODOT (1-888-275-6636)

DENNIS W. HECKMAN NUMBER PE-27141 PROFESSIONAL ENGINEER
THIS SHEET HAS BEEN SIGNED, SEALED AND DATED ELECTRONICALLY.

CONCRETE SINGLE BOX CULVERT

MEMBER THICKNESS
BAR SIZE, SPACING & DIMENSIONS

SPAN (S): 16 FEET
HEIGHT (HT): 8 THRU 16 FEET

DATE EFFECTIVE: 04/01/2011
DATE PREPARED: 4/18/2011

703.17

SHEET NO.
14 OF 14

IF A SEAL IS PRESENT ON THIS SHEET IT HAS BEEN ELECTRONICALLY SEALED AND DATED.

AREA OF STEEL REQUIRED FOR J5 BARS IN WINGS (SQ. IN./FT.)
WALL HEIGHT VS. WALL THICKNESS

① Backfill Slope = 2:1

Wall Thickness TX (in.)	Wall Height (ft.)															
	5	6	7	8	9	10	11	12	13	14	15	16	17	18	19	20
8	0.168	0.168	0.197	0.291	0.414	0.429	0.578	0.766	1.003							
9	0.168	0.168	0.168	0.244	0.346	0.456	0.477	0.626	0.809	1.034	1.312					
10	0.168	0.168	0.168	0.211	0.298	0.407	0.487	0.532	0.683	0.864	1.084	1.349				
11	0.168	0.168	0.168	0.185	0.261	0.357	0.475	0.520	0.592	0.746	0.929	1.147	1.405			
12		0.168	0.168	0.168	0.233	0.318	0.422	0.548	0.554	0.658	0.816	1.002	1.220	1.475		
13		0.168	0.168	0.168	0.210	0.287	0.380	0.493	0.588	0.589	0.729	0.892	1.081	1.301		
14			0.168	0.168	0.192	0.261	0.346	0.448	0.569	0.623	0.659	0.805	0.973	1.167	1.390	
15				0.168	0.176	0.240	0.317	0.411	0.521	0.652	0.658	0.734	0.886	1.059	1.258	
16					0.168	0.222	0.293	0.379	0.481	0.601	0.693	0.693	0.813	0.971	1.151	
17					0.168	0.206	0.273	0.352	0.447	0.557	0.686	0.729	0.752	0.897	1.061	1.247
18							0.255	0.329	0.417	0.520	0.639	0.764	0.764	0.834	0.985	1.156
19								0.309	0.391	0.487	0.599	0.727	0.800	0.800	0.920	1.078
20								0.291	0.368	0.459	0.563	0.684	0.821	0.836	0.863	1.011
21									0.348	0.433	0.532	0.645	0.774	0.871	0.871	0.952
22										0.411	0.504	0.611	0.733	0.870	0.907	0.970
23											0.479	0.580	0.696	0.826	0.943	0.943
24											0.456	0.552	0.662	0.786	0.925	0.979
25												0.527	0.632	0.750	0.882	1.015
26													0.604	0.717	0.843	0.984
27														0.686	0.807	0.942

AREA OF STEEL REQUIRED FOR J5 BARS IN WINGS (SQ. IN./FT.)
WALL HEIGHT VS. WALL THICKNESS

① Backfill Slope = 3:1

Wall Thickness TX (in.)	Wall Height (ft.)															
	5	6	7	8	9	10	11	12	13	14	15	16	17	18	19	20
8	0.168	0.168	0.168	0.187	0.264	0.362	0.425	0.475	0.612							
9	0.168	0.168	0.168	0.168	0.222	0.303	0.403	0.456	0.504	0.637	0.795					
10	0.168	0.168	0.168	0.168	0.191	0.261	0.346	0.450	0.487	0.541	0.671	0.824	1.005	1.217		
11	0.168	0.168	0.168	0.168	0.168	0.229	0.304	0.394	0.501	0.520	0.583	0.713	0.864	1.039		
12		0.168	0.168	0.168	0.168	0.204	0.271	0.351	0.445	0.554	0.554	0.629	0.760	0.910		
13		0.168	0.168	0.168	0.168	0.185	0.244	0.316	0.401	0.501	0.588	0.588	0.679	0.812	0.963	
14			0.168	0.168	0.168	0.168	0.223	0.288	0.365	0.455	0.560	0.623	0.623	0.733	0.868	
15				0.168	0.168	0.168	0.204	0.264	0.335	0.417	0.513	0.623	0.658	0.669	0.791	
16					0.168	0.168	0.189	0.244	0.309	0.385	0.474	0.575	0.690	0.693	0.727	
17					0.168	0.168	0.176	0.227	0.287	0.358	0.440	0.533	0.640	0.729	0.729	0.788
18							0.168	0.212	0.269	0.334	0.411	0.498	0.597	0.709	0.764	0.764
19								0.199	0.252	0.314	0.385	0.467	0.559	0.664	0.782	0.800
20								0.188	0.237	0.295	0.362	0.439	0.526	0.625	0.735	0.836
21									0.224	0.279	0.342	0.415	0.497	0.590	0.694	0.810
22										0.265	0.325	0.393	0.471	0.558	0.657	0.766
23											0.308	0.373	0.447	0.530	0.624	0.727
24											0.294	0.356	0.426	0.505	0.594	0.692
25												0.340	0.407	0.482	0.566	0.661
26													0.389	0.461	0.542	0.632
27														0.442	0.519	0.605

NOTE:

THE WALL HEIGHT IS EQUAL TO THE BARREL HEIGHT (HT) PLUS THE TOP SLAB THICKNESS (TS). WHEN WALL HEIGHT IS IN BETWEEN OR OUTSIDE TABULATED WALL HEIGHTS, THE AREA OF STEEL REQUIRED SHOULD BE INTERPOLATED BETWEEN OR EXTRAPOLATED FROM ADJACENT AREAS OF STEEL USING THE ACTUAL WALL HEIGHT.

IF AREA OF STEEL IN THE WALL OF THE CULVERT (J4 BARS) IS GREATER THAN THAT INDICATED IN THE TABLE, USE THE SAME SIZE AND SPACING FOR THE J5 BARS IN THE WINGS. HOWEVER, IF THE AREA OF STEEL PROVIDED BY MATCHING SIZE AND SPACING OF THE J4 BARS IS INSUFFICIENT, INCREASE THE SIZE OF THE J5 BARS (#8 MAX.) AND/OR DECREASE THE SPACING OF THE J5 BARS (6" MIN.). USE SMALLEST BAR SIZE POSSIBLE BASED ON MINIMUM SPACING.

MINIMUM STEEL TO BE USED IN THE WINGS FOR J5 BARS IS #4 BARS AT 14" CENTERS (AREA OF STEEL = 0.1683 SQ. IN./FT.)

① SEE STANDARD PLAN 703.37C, SHEET 2 OF 2 FOR BACKFILL SLOPE TO BE USED BASED ON SKEW.

MISSOURI HIGHWAYS AND TRANSPORTATION COMMISSION
105 WEST CAPITOL
JEFFERSON CITY, MO 65102
1-888-ASK-MODOT (1-888-275-6636)

STATE OF MISSOURI
DENNIS W. HECKMAN
NUMBER PE-27141
PROFESSIONAL ENGINEER
THIS SHEET HAS BEEN SIGNED, SEALED AND DATED ELECTRONICALLY.

CONCRETE BOX CULVERT

EXTERIOR WING REINFORCEMENT

DATE EFFECTIVE: 04/01/2011
DATE PREPARED: 4/18/2011

703.37C

SHEET NO. 1 OF 2

IF A SEAL IS PRESENT ON THIS SHEET IT HAS BEEN ELECTRONICALLY SEALED AND DATED.

WING BACKFILL TABLE			
WING SKEW (DEGREES)	A (DEGREES)	B TRANSITION ANGLE (DEGREES)	C BACKFILL SLOPE (H:V)
<0	>90	65	>3:1
0	90	65	3:1
5	85	58	3:1
10	80	51	3:1
15	75	43	3:1
20	70	37	3:1
25	65	29	3:1
30	60	22	3:1
35	55	33	2:1
40	50	28	2:1
45	45	23	2:1
50	40	19	2:1
55	35	14	2:1
60	30	10	2:1

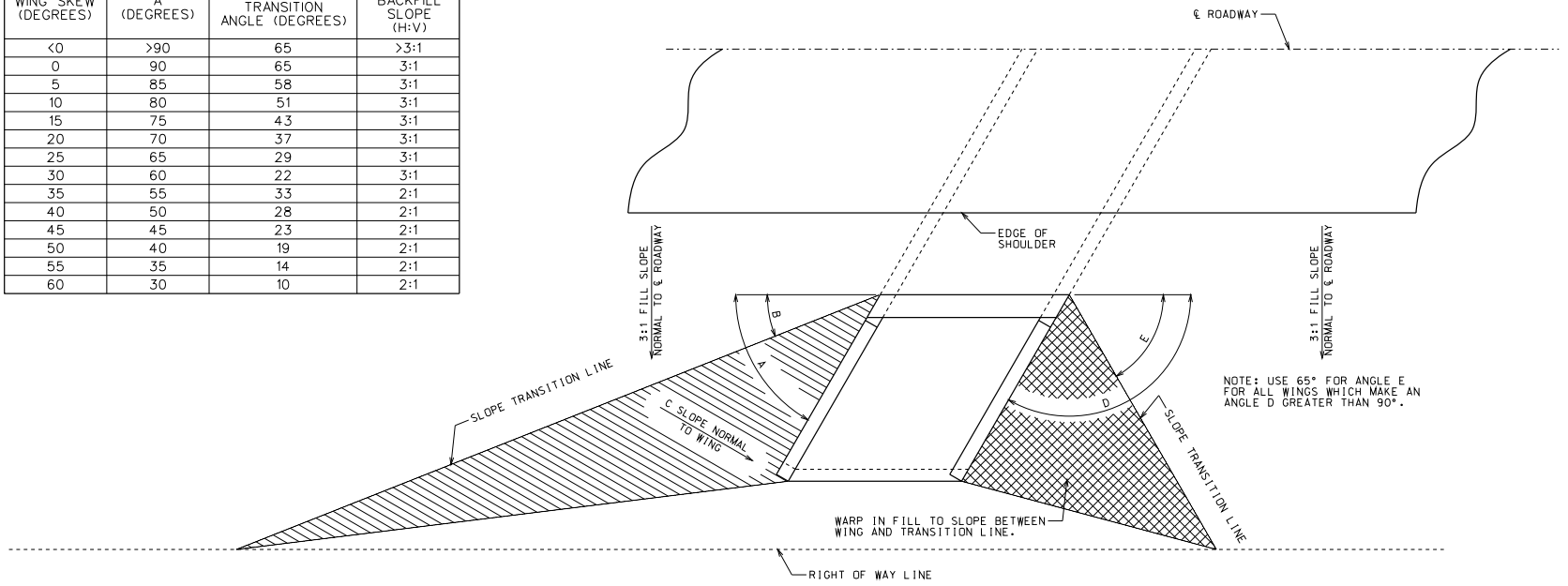

PLAN OF WINGS AND SLOPE TRANSITION LINES

NOTE: BACKFILL TRANSITION ANGLE AND BACKFILL SLOPE SHALL APPLY TO ALL BOX CULVERTS REGARDLESS OF TYPE - SINGLE, DOUBLE, OR TRIPLE.

MISSOURI HIGHWAYS AND TRANSPORTATION COMMISSION
105 WEST CAPITOL
JEFFERSON CITY, MO 65102
1-888-ASK-MODOT (1-888-275-6636)

STATE OF MISSOURI
DENNIS W. HECKMAN
NUMBER PE-27141
PROFESSIONAL ENGINEER
THIS SHEET HAS BEEN SIGNED, SEALED AND DATED ELECTRONICALLY.

CONCRETE BOX CULVERT

EXTERIOR WING BACKFILL SLOPE TRANSITION

DATE EFFECTIVE: 04/01/2011
DATE PREPARED: 4/18/2011

703.37C

SHEET NO. 2 OF 2

IF A SEAL IS PRESENT ON THIS SHEET IT HAS BEEN ELECTRONICALLY SEALED AND DATED.

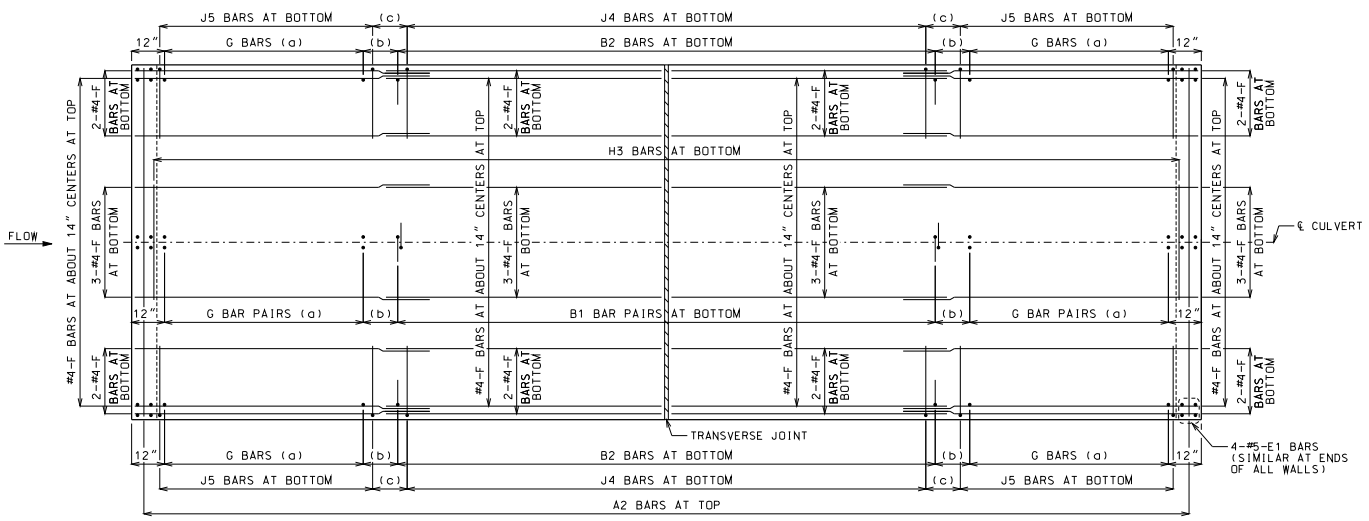

PLAN OF BOTTOM SLAB

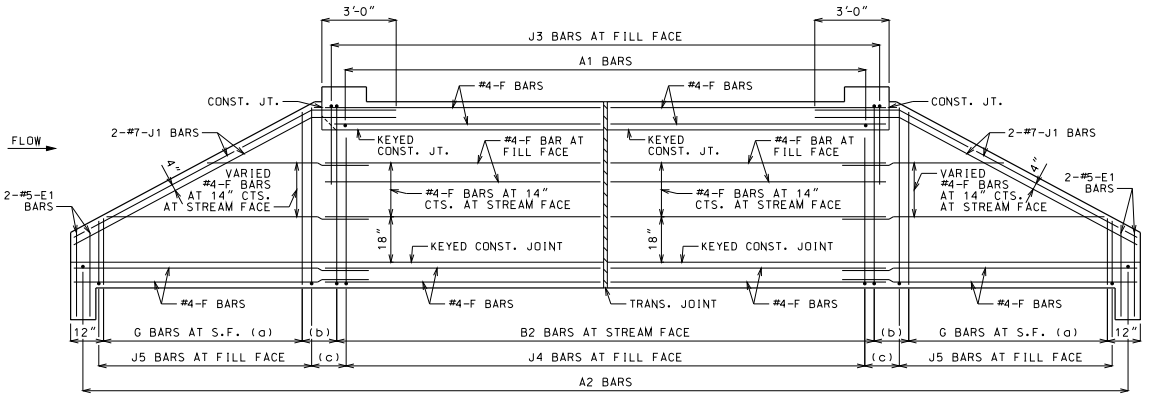

ELEVATION OF EXTERIOR WALL

J1 BARS MAY BE BENT IN FIELD OR SHOP.

LAYING OUT TRANVERSE JOINTS

UNLESS SHOWN ON BRIDGE PLANS

USE A TRANSVERSE JOINT WHEN BARREL LENGTH IS OVER 80 FEET. USE ADDITIONAL JOINTS TO LIMIT CUT SECTION LENGTH AND END SECTION BARREL LENGTH MEASURED ALONG CENTERLINE OF CULVERT TO 50 FEET.

MINIMUM END SECTION LENGTH SHALL BE 3 FEET MEASURED ALONG THE SHORTEST WALL FROM THE INSIDE FACE OF HEADWALL TO THE TRANSVERSE JOINT.

TO AVOID LOCATING TRANSVERSE JOINTS UNDER A TRAVELED WAY WITH DESIGN FILLS 2 FEET OR LESS THE FOLLOWING SHALL APPLY:

BARREL LENGTH UP TO 90 FEET WITHOUT A TRANSVERSE JOINT

CUT SECTION LENGTHS UP TO 60 FEET

WHEN BARREL AND CUT SECTION LENGTH RESTRICTIONS REQUIRE TRANSVERSE JOINTS TO BE LOCATED UNDER A TRAVELED WAY WITH DESIGN FILLS 2 FEET OR LESS, THE JOINTS SHALL BE LOCATED TO MINIMIZE THE LENGTH OF JOINT UNDER THE TRAVELED WAY.

TRAVELED WAY IS THE ROADWAY WIDTH MINUS SHOULDER WIDTHS.

FOR CUT SECTION DETAILS, SEE 703.46.

GENERAL NOTES:

FOR SECTIONS THRU BARREL, WINGS AND HEADWALLS, SEE SHEET 3 OF 3. FOR BAR SIZES, SPACING AND DIMENSIONS OF ALL REINFORCEMENT EXCEPT J5 BARS, SEE 703.47. FOR J5 BARS, SEE 703.37.

CONSTRUCTION JOINT KEY NOT SHOWN FOR CLARITY IN PLAN AND ELEVATION, SEE SHEET 3 OF 3 FOR DETAILS.

DRAWING NOT TO SCALE. FOLLOW DIMENSIONS.

MINIMUM CLEARANCE TO REINFORCING STEEL SHALL BE 1½".

LAP LONGITUDINAL BARS A MINIMUM OF 23" AT SPLICES.

BEVELED HEADWALL SHALL BE LOCATED AT UPSTREAM END.

(a) SAME SIZE AND SPACING AS ADJACENT B BARS

(b) VARIES, 12" MAXIMUM

(c) J4 BAR SPACING

MISSOURI HIGHWAYS AND TRANSPORTATION COMMISSION
105 WEST CAPITOL
JEFFERSON CITY, MO 65102
1-888-ASK-MODOT (1-888-275-6636)

STATE OF MISSOURI
DENNIS W. HECKMAN
NUMBER PE-27141
PROFESSIONAL ENGINEER
THIS SHEET HAS BEEN SIGNED, SEALED AND DATED ELECTRONICALLY.

CONCRETE DOUBLE BOX CULVERT

SKEW: SQUARE
WINGS: STRAIGHT

REINFORCEMENT

DATE EFFECTIVE:	10/01/2011	703.40H	SHEET NO. 1 OF 3
DATE PREPARED:	9/8/2011		

IF A SEAL IS PRESENT ON THIS SHEET IT HAS BEEN ELECTRONICALLY SEALED AND DATED.

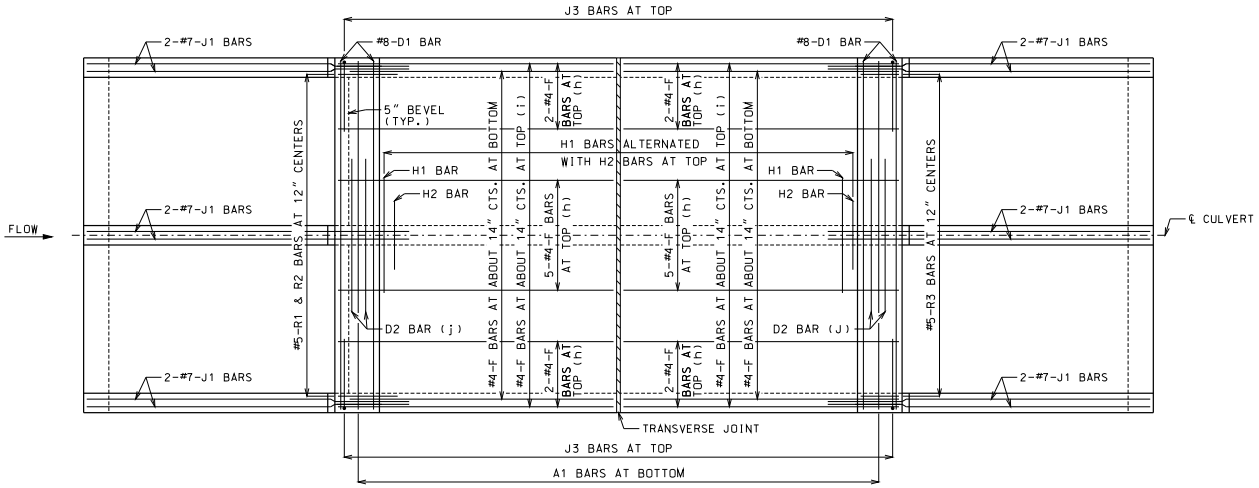

PLAN OF TOP SLAB

B BARS IN WALLS ARE NOT SHOWN FOR CLARITY.
FOR PLACEMENT, SEE SHEET 1 OF 3.

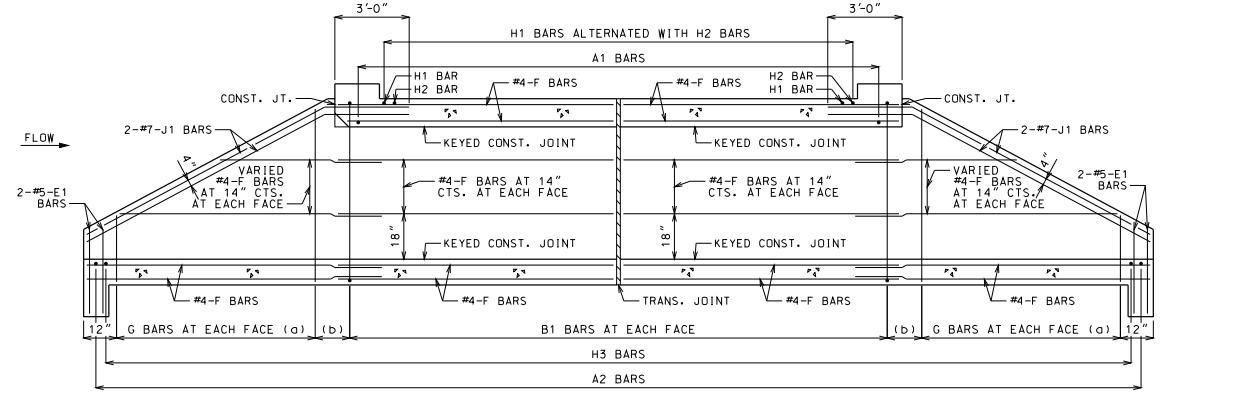

SECTION NEAR INTERIOR WALL

J1 BARS MAY BE BENT IN FIELD OR SHOP.

GENERAL NOTES:

FOR SECTIONS THRU BARREL, WINGS AND HEADWALLS, SEE SHEET 3 OF 3. FOR BAR SIZES, SPACING AND DIMENSIONS OF ALL REINFORCEMENT EXCEPT J5 BARS, SEE 703.47. FOR J5 BARS, SEE 703.37.

CONSTRUCTION JOINT KEY NOT SHOWN FOR CLARITY IN PLAN AND SECTION, SEE SHEET 3 OF 3 FOR DETAILS.

DRAWING NOT TO SCALE. FOLLOW DIMENSIONS.

MINIMUM CLEARANCE TO REINFORCING STEEL SHALL BE 1½".

LAP LONGITUDINAL BARS A MINIMUM OF 23" AT SPLICES.

BEVELED HEADWALL SHALL BE LOCATED AT UPSTREAM END.

(a) SAME SIZE AND SPACING AS ADJACENT B BARS

(b) VARIES, 12" MAXIMUM

(c) NOT SPECIFIED ON THIS SHEET

(d) NOT SPECIFIED ON THIS SHEET

(e) NOT SPECIFIED ON THIS SHEET

(f) NOT SPECIFIED ON THIS SHEET

(g) NOT SPECIFIED ON THIS SHEET

(h) FOR DESIGN FILLS OVER 2'-0"

(i) FOR DESIGN FILLS 2'-0" OR LESS

(j) NOT REQUIRED FOR CLEAR SPANS ≤ 10'-0"
#8 FOR CLEAR SPAN > 10'-0"
#9 FOR CLEAR SPAN > 13'-0"

IF REQUIRED, THE MINIMUM LENGTH EACH SIDE OF ℄ WALL SHALL BE THE GREATER OF 48 BAR DIAMETERS OR ¼ CLEAR SPAN. THE CLEAR SPAN IS PARALLEL TO LONG DIRECTION OF HEADWALL.

MISSOURI HIGHWAYS AND TRANSPORTATION COMMISSION
105 WEST CAPITOL
JEFFERSON CITY, MO 65102
1-888-ASK-MODOT (1-888-275-6636)

STATE OF MISSOURI
DENNIS W. HECKMAN
NUMBER PE-27141
PROFESSIONAL ENGINEER
THIS SHEET HAS BEEN SIGNED, SEALED AND DATED ELECTRONICALLY.

CONCRETE DOUBLE BOX CULVERT

SKEW: SQUARE
WINGS: STRAIGHT

REINFORCEMENT

DATE EFFECTIVE: 10/01/2011
DATE PREPARED: 9/8/2011

703.40H

SHEET NO. 2 OF 3

IF A SEAL IS PRESENT ON THIS SHEET IT HAS BEEN ELECTRONICALLY SEALED AND DATED.

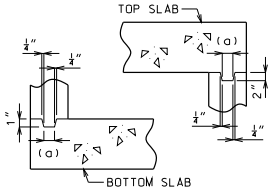

KEYED CONSTRUCTION JOINT

(a) APPROXIMATELY ONE-THIRD OF WALL THICKNESS

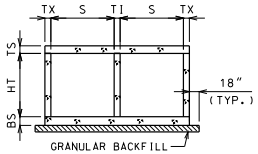

GRANULAR BACKFILL LIMITS AND MEMBER DIMENSIONS

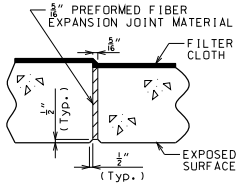

TRANSVERSE JOINT THRU BARREL

PREFORMED FIBER EXPANSION JOINT MATERIAL SHALL BE SECURELY STITCHED TO ONE FACE OF THE CONCRETE WITH NO. 10 GAGE COPPER WIRE OR NO. 12 GAGE SOFT DRAWN GALVANIZED STEEL WIRE.

FILTER CLOTH 3 FEET IN WIDTH AND DOUBLE THICKNESS SHALL BE CENTERED ON TRANSVERSE JOINTS IN TOP SLAB AND SIDEWALLS WITH EDGES SEALED WITH MASTIC OR TWO SIDED TAPE. FILTER CLOTH SHALL BE A SUBSURFACE DRAINAGE GEOTEXTILE IN ACCORDANCE WITH SECTION 1011 OF THE STANDARD SPECIFICATIONS FOR HIGHWAY CONSTRUCTION. COST OF FURNISHING AND INSTALLING FILTER CLOTH WILL BE CONSIDERED COMPLETELY COVERED BY THE CONTRACT UNIT PRICE FOR OTHER ITEMS.

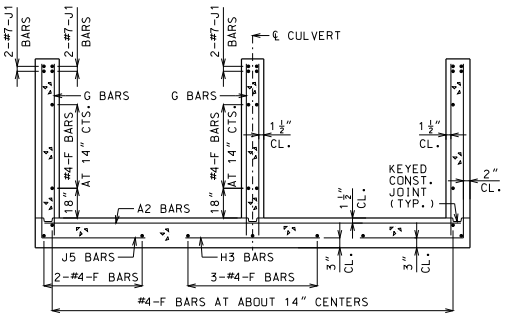

UPSTREAM AND DOWNSTREAM WINGS REINFORCEMENT

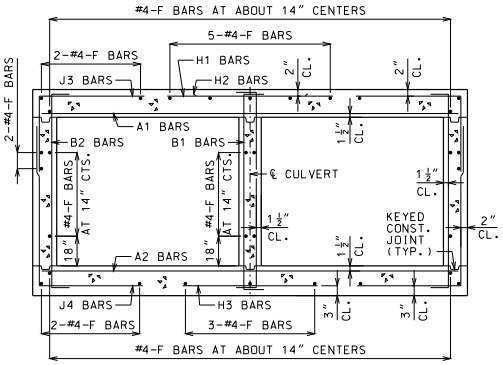

BARREL REINFORCEMENT

FOR DESIGN FILLS OVER 2'-0"

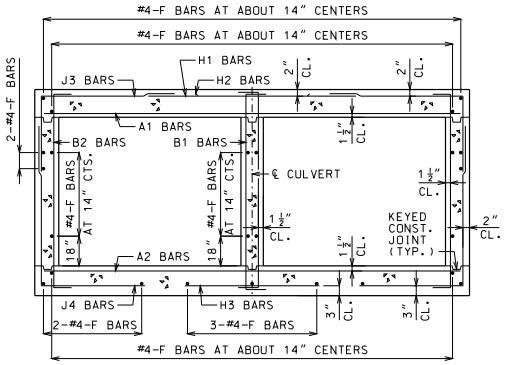

BARREL REINFORCEMENT

FOR DESIGN FILLS 2'-0" OR LESS

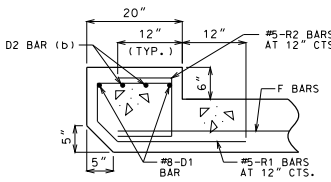

UPSTREAM HEADWALL REINFORCEMENT

NEAR INTERIOR WALL

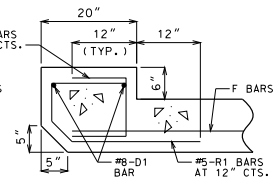

UPSTREAM HEADWALL REINFORCEMENT

NEAR MIDSPAN

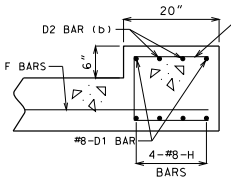

DOWNSTREAM HEADWALL REINFORCEMENT

NEAR INTERIOR WALL

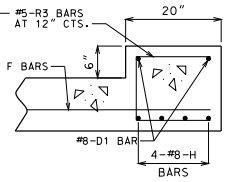

DOWNSTREAM HEADWALL REINFORCEMENT

NEAR MIDSPAN

(b) #8 FOR CLEAR SPAN > 10'-0"
#9 FOR CLEAR SPAN > 13'-0"
NOT REQUIRED FOR CLEAR SPANS ≤ 10'-0"

IF D2 BARS ARE REQUIRED, THE MINIMUM LENGTH EACH SIDE OF ℄ WALL SHALL BE THE GREATER OF 48 BAR DIAMETERS OR ¼ CLEAR SPAN. THE CLEAR SPAN IS PARALLEL TO LONG DIRECTION OF HEADWALL.

GENERAL NOTES:

FOR MEMBER THICKNESS AND FOR BAR SIZES, SPACING AND DIMENSIONS OF ALL REINFORCEMENT EXCEPT J5 BARS, SEE 703.47. FOR J5 BARS, SEE 703.37.

BARREL AND WINGS SECTIONS ARE SYMMETRICAL ABOUT AND NORMAL TO ℄ CULVERT. HEADWALL SECTIONS ARE NORMAL TO LONG DIRECTION OF HEADWALL.

DRAWING NOT TO SCALE. FOLLOW DIMENSIONS.

MINIMUM CLEARANCE TO REINFORCING STEEL SHALL BE 1½".

MISSOURI HIGHWAYS AND TRANSPORTATION COMMISSION
105 WEST CAPITOL
JEFFERSON CITY, MO 65102
1-888-ASK-MODOT (1-888-275-6636)

STATE OF MISSOURI
DENNIS W. HECKMAN
NUMBER PE-27141
PROFESSIONAL ENGINEER
THIS SHEET HAS BEEN SIGNED, SEALED AND DATED ELECTRONICALLY.

CONCRETE DOUBLE BOX CULVERT

SKEW: SQUARE
WINGS: STRAIGHT

SECTIONS

DATE EFFECTIVE:	10/01/2011	703.40H	SHEET NO. 3 OF 3
DATE PREPARED:	9/8/2011		

IF A SEAL IS PRESENT ON THIS SHEET IT HAS BEEN ELECTRONICALLY SEALED AND DATED.

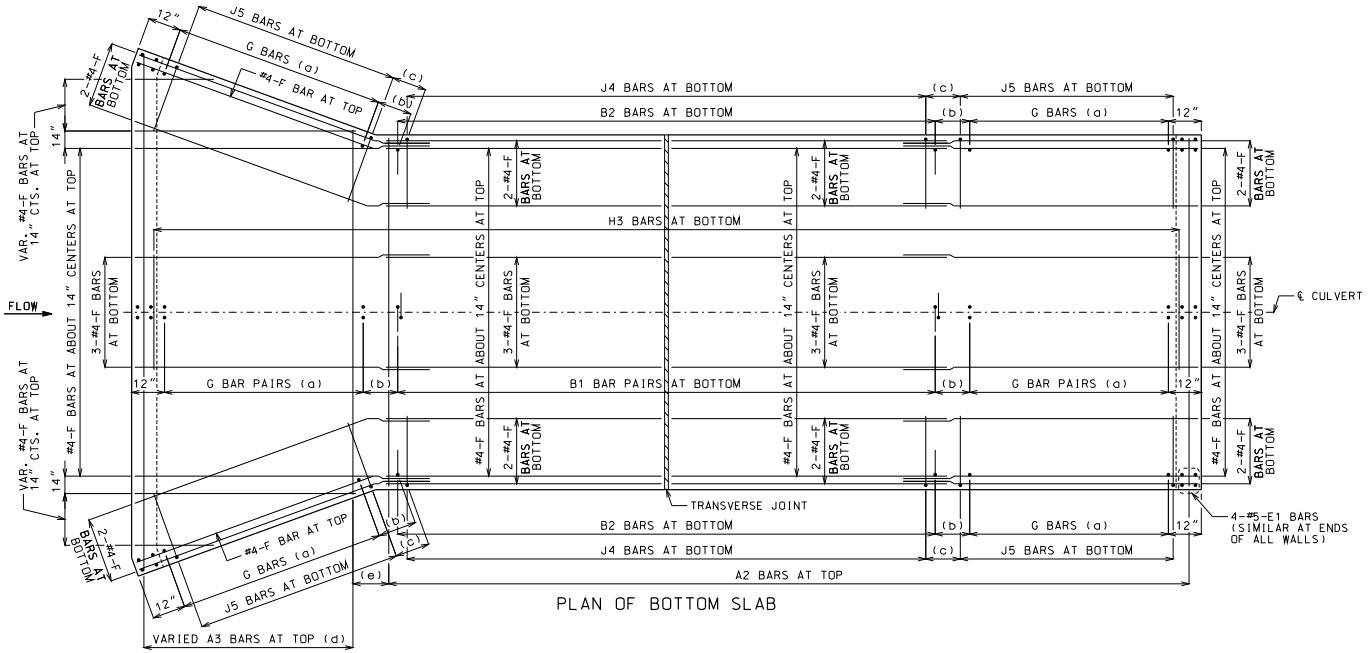

PLAN OF BOTTOM SLAB

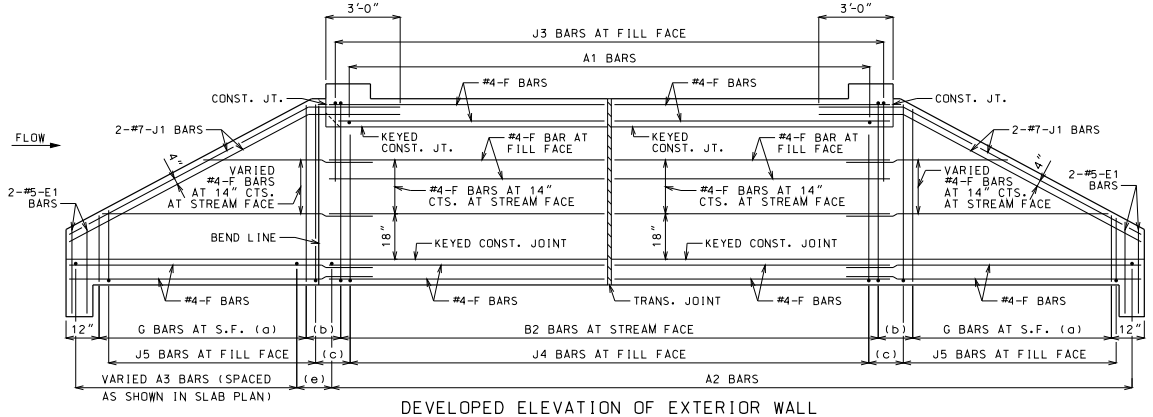

DEVELOPED ELEVATION OF EXTERIOR WALL

J1 BARS MAY BE BENT IN FIELD OR SHOP.

LAYING OUT TRANVERSE JOINTS

UNLESS SHOWN ON BRIDGE PLANS

USE A TRANSVERSE JOINT WHEN BARREL LENGTH IS OVER 80 FEET. USE ADDITIONAL JOINTS TO LIMIT CUT SECTION LENGTH AND END SECTION BARREL LENGTH MEASURED ALONG CENTERLINE OF CULVERT TO 50 FEET.

MINIMUM END SECTION LENGTH SHALL BE 3 FEET MEASURED ALONG THE SHORTEST WALL FROM THE INSIDE FACE OF HEADWALL TO THE TRANSVERSE JOINT.

TO AVOID LOCATING TRANSVERSE JOINTS UNDER A TRAVELED WAY WITH DESIGN FILLS 2 FEET OR LESS THE FOLLOWING SHALL APPLY:

BARREL LENGTH UP TO 90 FEET WITHOUT A TRANSVERSE JOINT

CUT SECTION LENGTHS UP TO 60 FEET

WHEN BARREL AND CUT SECTION LENGTH RESTRICTIONS REQUIRE TRANSVERSE JOINTS TO BE LOCATED UNDER A TRAVELED WAY WITH DESIGN FILLS 2 FEET OR LESS, THE JOINTS SHALL BE LOCATED TO MINIMIZE THE LENGTH OF JOINT UNDER THE TRAVELED WAY.

TRAVELED WAY IS THE ROADWAY WIDTH MINUS SHOULDER WIDTHS.

FOR CUT SECTION DETAILS. SEE 703.46.

GENERAL NOTES:

FOR SECTIONS THRU BARREL, WINGS AND HEADWALLS, SEE SHEET 3 OF 3. FOR BAR SIZES, SPACING AND DIMENSIONS OF ALL REINFORCEMENT EXCEPT J5 BARS, SEE 703.47. FOR J5 BARS, SEE 703.37.

CONSTRUCTION JOINT KEY NOT SHOWN FOR CLARITY IN PLAN AND ELEVATION, SEE SHEET 3 OF 3 FOR DETAILS.

DRAWING NOT TO SCALE. FOLLOW DIMENSIONS.

MINIMUM CLEARANCE TO REINFORCING STEEL SHALL BE 1 1/2 ".

LAP LONGITUDINAL BARS A MINIMUM OF 23" AT SPLICES.

BEVELED HEADWALL SHALL BE LOCATED AT UPSTREAM END.

(a) SAME SIZE AND SPACING AS ADJACENT B BARS

(b) VARIES, 12" MAXIMUM

(c) J4 BAR SPACING

(d) SAME SIZE AND SPACING AS A2 BARS

(e) A2 BAR SPACING

MISSOURI HIGHWAYS AND TRANSPORTATION COMMISSION
105 WEST CAPITOL
JEFFERSON CITY, MO 65102
1-888-ASK-MODOT (1-888-275-6636)

STATE OF MISSOURI
DENNIS W. HECKMAN
NUMBER PE-27141
PROFESSIONAL ENGINEER
THIS SHEET HAS BEEN SIGNED, SEALED AND DATED ELECTRONICALLY.

CONCRETE DOUBLE BOX CULVERT

SKEW: SQUARE
WINGS: FLARED

REINFORCEMENT

DATE EFFECTIVE: 10/01/2011
DATE PREPARED: 9/8/2011

703.41H

SHEET NO. 1 OF 3

IF A SEAL IS PRESENT ON THIS SHEET IT HAS BEEN ELECTRONICALLY SEALED AND DATED.

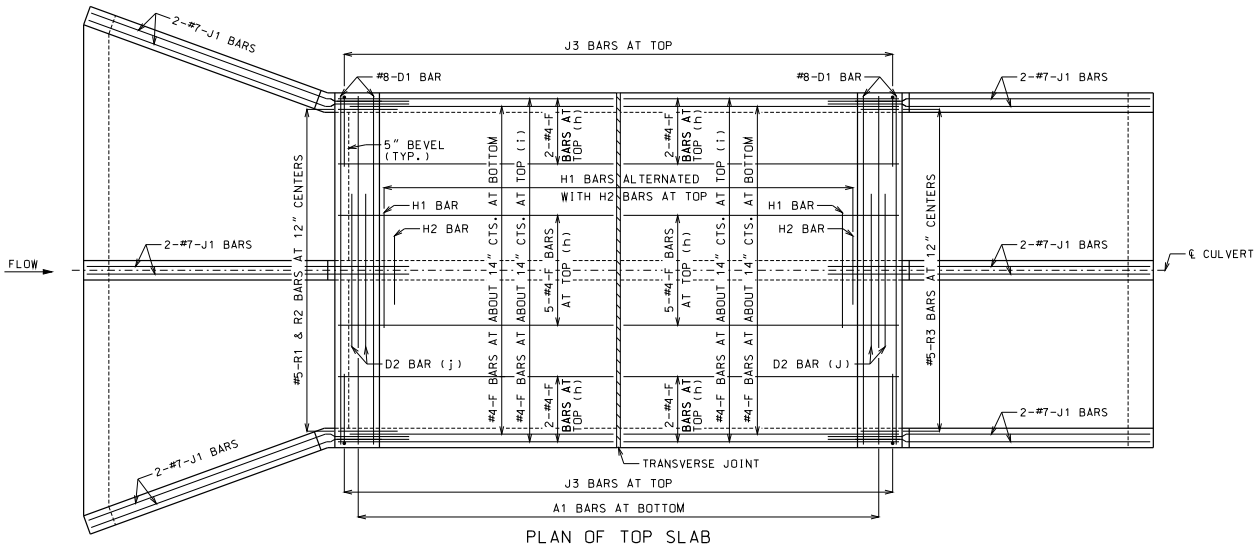

PLAN OF TOP SLAB

B BARS IN WALLS ARE NOT SHOWN FOR CLARITY.
FOR PLACEMENT, SEE SHEET 1 OF 3.

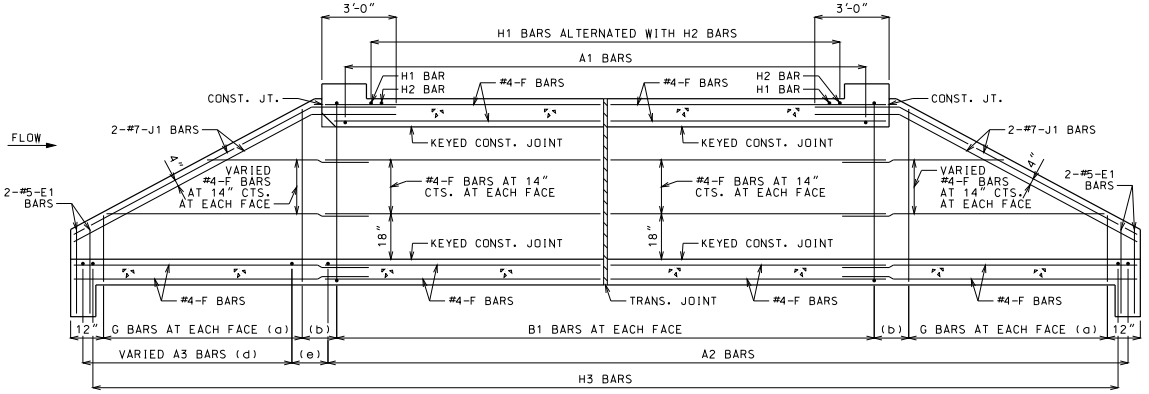

SECTION NEAR INTERIOR WALL

J1 BARS MAY BE BENT IN FIELD OR SHOP.

GENERAL NOTES:

FOR SECTIONS THRU BARREL, WINGS AND HEADWALLS, SEE SHEET 3 OF 3. FOR BAR SIZES, SPACING AND DIMENSIONS OF ALL REINFORCEMENT EXCEPT J5 BARS, SEE 703.47. FOR J5 BARS, SEE 703.37.

CONSTRUCTION JOINT KEY NOT SHOWN FOR CLARITY IN PLAN AND SECTION, SEE SHEET 3 OF 3 FOR DETAILS.

DRAWING NOT TO SCALE. FOLLOW DIMENSIONS.

MINIMUM CLEARANCE TO REINFORCING STEEL SHALL BE 1½".

LAP LONGITUDINAL BARS A MINIMUM OF 23" AT SPLICES.

BEVELED HEADWALL SHALL BE LOCATED AT UPSTREAM END.

(a) SAME SIZE AND SPACING AS ADJACENT B BARS

(b) VARIES, 12" MAXIMUM

(c) NOT SPECFIED ON THIS SHEET

(d) SAME SIZE AND SPACING AS A2 BARS

(e) A2 BAR SPACING

(f) NOT SPECFIED ON THIS SHEET

(g) NOT SPECFIED ON THIS SHEET

(h) FOR DESIGN FILLS OVER 2'-0"

(i) FOR DESIGN FILLS 2'-0" OR LESS

(j) NOT REQUIRED FOR CLEAR SPANS ≤ 10'-0"
#8 FOR CLEAR SPAN > 10'-0"
#9 FOR CLEAR SPAN > 13'-0"

IF REQUIRED, THE MINIMUM LENGTH EACH SIDE OF ℄ WALL SHALL BE THE GREATER OF 48 BAR DIAMETERS OR ¼ CLEAR SPAN. THE CLEAR SPAN IS PARALLEL TO LONG DIRECTION OF HEADWALL.

IF A SEAL IS PRESENT ON THIS SHEET IT HAS BEEN ELECTRONICALLY SEALED AND DATED.

MISSOURI HIGHWAYS AND TRANSPORTATION COMMISSION
105 WEST CAPITOL
JEFFERSON CITY, MO 65102
1-888-ASK-MODOT (1-888-275-6636)

STATE OF MISSOURI
DENNIS W. HECKMAN
NUMBER PE-27141
PROFESSIONAL ENGINEER
THIS SHEET HAS BEEN SIGNED, SEALED AND DATED ELECTRONICALLY.

CONCRETE DOUBLE BOX CULVERT

SKEW: SQUARE
WINGS: FLARED

REINFORCEMENT

DATE EFFECTIVE:	10/01/2011	703.41H	SHEET NO. 2 OF 3
DATE PREPARED:	9/8/2011		

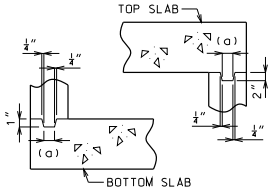

KEYED CONSTRUCTION JOINT

(a) APPROXIMATELY ONE-THIRD OF WALL THICKNESS

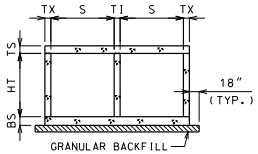

GRANULAR BACKFILL LIMITS AND MEMBER DIMENSIONS

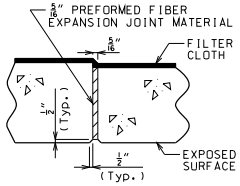

TRANSVERSE JOINT THRU BARREL

PREFORMED FIBER EXPANSION JOINT MATERIAL SHALL BE SECURELY STITCHED TO ONE FACE OF THE CONCRETE WITH NO. 10 GAGE COPPER WIRE OR NO. 12 GAGE SOFT DRAWN GALVANIZED STEEL WIRE.

FILTER CLOTH 3 FEET IN WIDTH AND DOUBLE THICKNESS SHALL BE CENTERED ON TRANSVERSE JOINTS IN TOP SLAB AND SIDEWALLS WITH EDGES SEALED WITH MASTIC OR TWO SIDED TAPE. FILTER CLOTH SHALL BE A SUBSURFACE DRAINAGE GEOTEXTILE IN ACCORDANCE WITH SECTION 1011 OF THE STANDARD SPECIFICATIONS FOR HIGHWAY CONSTRUCTION. COST OF FURNISHING AND INSTALLING FILTER CLOTH WILL BE CONSIDERED COMPLETELY COVERED BY THE CONTRACT UNIT PRICE FOR OTHER ITEMS.

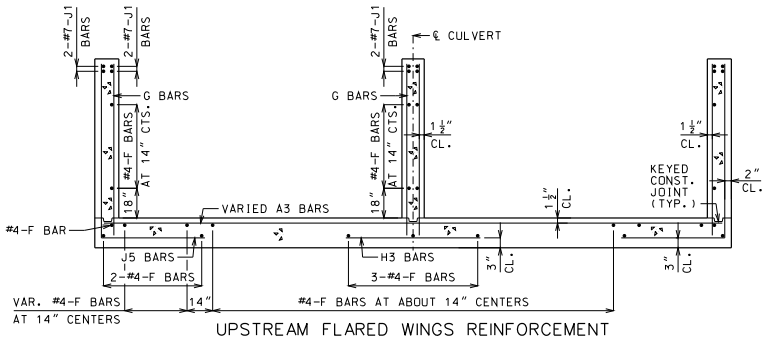

UPSTREAM FLARED WINGS REINFORCEMENT

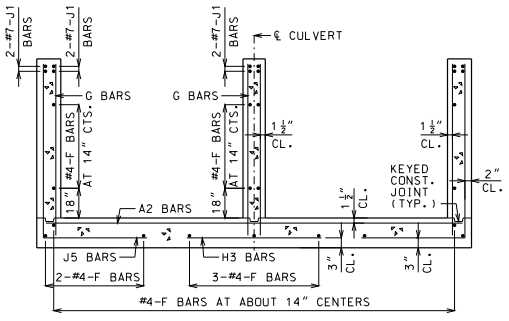

DOWNSTREAM WINGS REINFORCEMENT

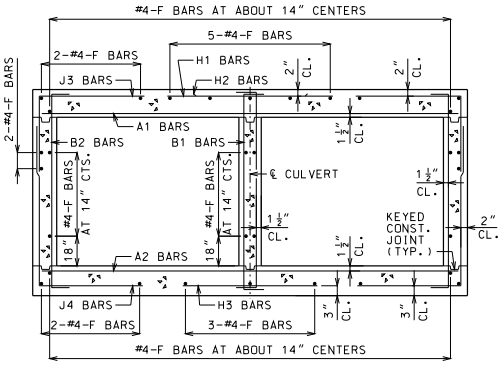

BARREL REINFORCEMENT

FOR DESIGN FILLS OVER 2'-0"

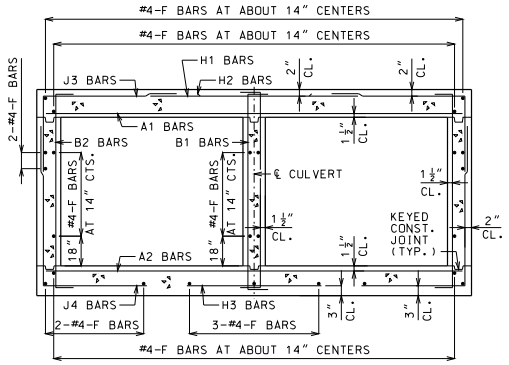

BARREL REINFORCEMENT

FOR DESIGN FILLS 2'-0" OR LESS

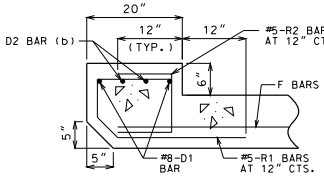

UPSTREAM HEADWALL REINFORCEMENT

NEAR INTERIOR WALL

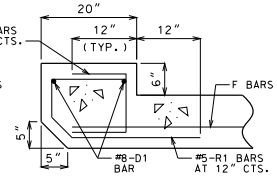

UPSTREAM HEADWALL REINFORCEMENT

NEAR MIDSPAN

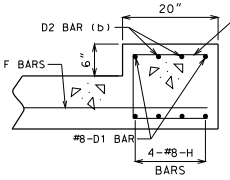

DOWNSTREAM HEADWALL REINFORCEMENT

NEAR INTERIOR WALL

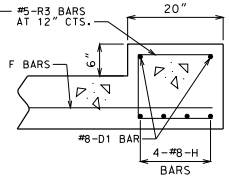

DOWNSTREAM HEADWALL REINFORCEMENT

NEAR MIDSPAN

(b) #8 FOR CLEAR SPAN > 10'-0"
#9 FOR CLEAR SPAN > 13'-0"
NOT REQUIRED FOR CLEAR SPANS ≤ 10'-0"

IF D2 BARS ARE REQUIRED, THE MINIMUM LENGTH EACH SIDE OF ℄ WALL SHALL BE THE GREATER OF 48 BAR DIAMETERS OR ¼ CLEAR SPAN. THE CLEAR SPAN IS PARALLEL TO LONG DIRECTION OF HEADWALL.

GENERAL NOTES:

FOR MEMBER THICKNESS AND FOR BAR SIZES, SPACING AND DIMENSIONS OF ALL REINFORCEMENT EXCEPT J5 BARS, SEE 703.47. FOR J5 BARS, SEE 703.37.

BARREL AND WINGS SECTIONS ARE SYMMETRICAL ABOUT AND NORMAL TO ℄ CULVERT. HEADWALL SECTIONS ARE NORMAL TO LONG DIRECTION OF HEADWALL.

DRAWING NOT TO SCALE. FOLLOW DIMENSIONS.

MINIMUM CLEARANCE TO REINFORCING STEEL SHALL BE 1½".

MISSOURI HIGHWAYS AND TRANSPORTATION COMMISSION
105 WEST CAPITOL
JEFFERSON CITY, MO 65102
1-888-ASK-MODOT (1-888-275-6636)

STATE OF MISSOURI
DENNIS W. HECKMAN
NUMBER PE-27141
PROFESSIONAL ENGINEER
THIS SHEET HAS BEEN SIGNED, SEALED AND DATED ELECTRONICALLY.

CONCRETE DOUBLE BOX CULVERT

SKEW: SQUARE
WINGS: FLARED

SECTIONS

DATE EFFECTIVE:	10/01/2011	703.41H	SHEET NO. 3 OF 3
DATE PREPARED:	9/8/2011		

IF A SEAL IS PRESENT ON THIS SHEET IT HAS BEEN ELECTRONICALLY SEALED AND DATED.

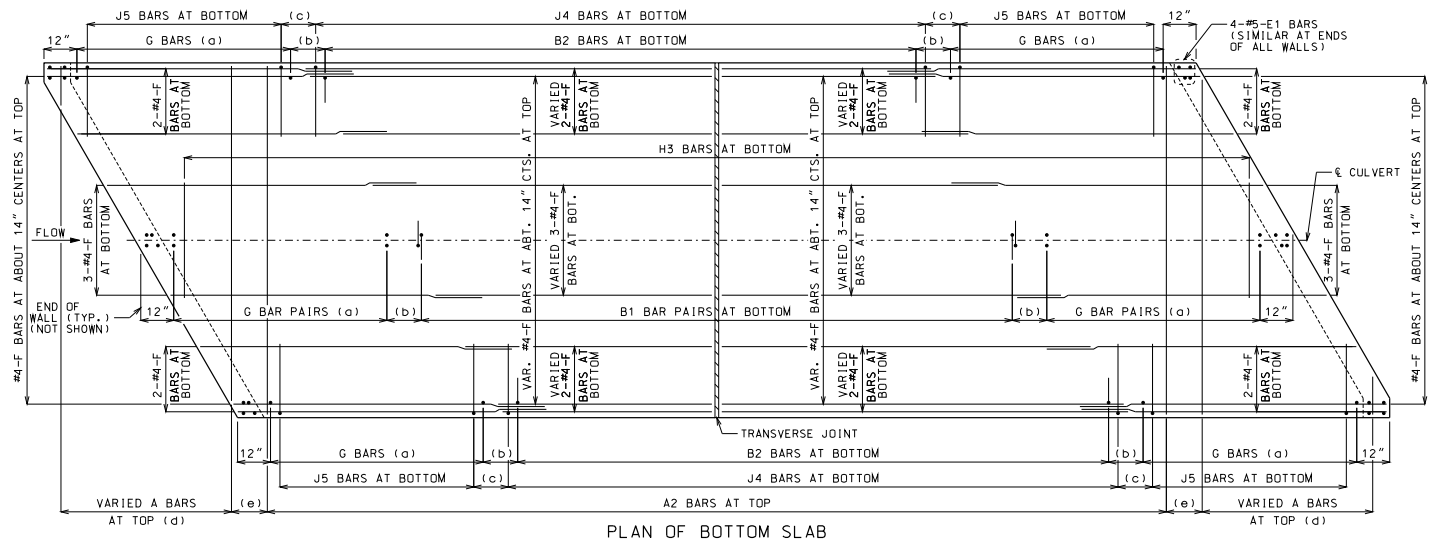

PLAN OF BOTTOM SLAB

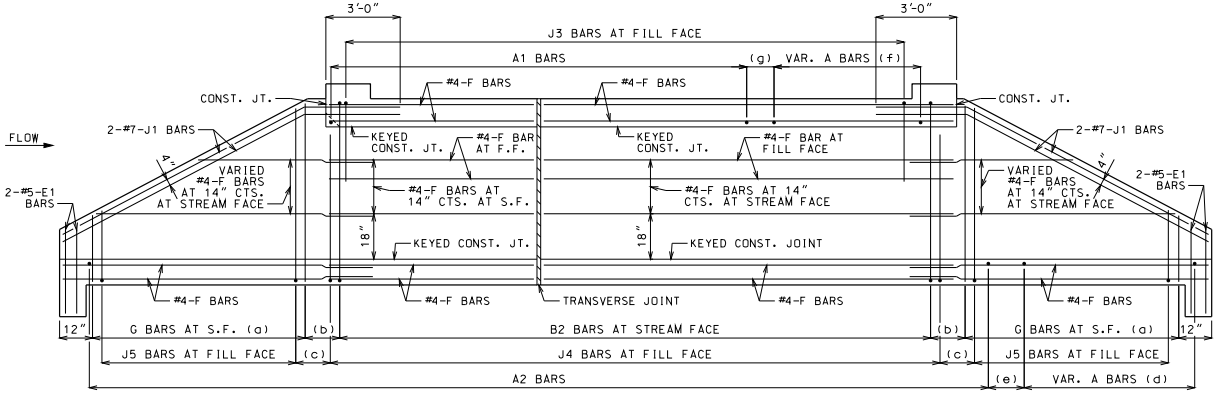

ELEVATION OF EXTERIOR WALL

J1 BARS MAY BE BENT IN FIELD OR SHOP.

LAYING OUT TRANVERSE JOINTS

UNLESS SHOWN ON BRIDGE PLANS

USE A TRANSVERSE JOINT WHEN BARREL LENGTH IS OVER 80 FEET. USE ADDITIONAL JOINTS TO LIMIT CUT SECTION LENGTH AND END SECTION BARREL LENGTH MEASURED ALONG CENTERLINE OF CULVERT TO 50 FEET.

MINIMUM END SECTION LENGTH SHALL BE 3 FEET MEASURED ALONG THE SHORTEST WALL FROM THE INSIDE FACE OF HEADWALL TO THE TRANSVERSE JOINT.

TO AVOID LOCATING TRANSVERSE JOINTS UNDER A TRAVELED WAY WITH DESIGN FILLS 2 FEET OR LESS THE FOLLOWING SHALL APPLY:

BARREL LENGTH UP TO 90 FEET WITHOUT A TRANSVERSE JOINT

CUT SECTION LENGTHS UP TO 60 FEET

WHEN BARREL AND CUT SECTION LENGTH RESTRICTIONS REQUIRE TRANSVERSE JOINTS TO BE LOCATED UNDER A TRAVELED WAY WITH DESIGN FILLS 2 FEET OR LESS, THE JOINTS SHALL BE LOCATED TO MINIMIZE THE LENGTH OF JOINT UNDER THE TRAVELED WAY.

TRAVELED WAY IS THE ROADWAY WIDTH MINUS SHOULDER WIDTHS.

FOR CUT SECTION DETAILS, SEE 703.46.

GENERAL NOTES:

FOR SECTIONS THRU BARREL, WINGS AND HEADWALLS, SEE SHEET 3 OF 3. FOR BAR SIZES, SPACING AND DIMENSIONS OF ALL REINFORCEMENT EXCEPT J5 BARS, SEE 703.47. FOR J5 BARS, SEE 703.37.

CONSTRUCTION JOINT KEY NOT SHOWN FOR CLARITY IN PLAN AND ELEVATION, SEE SHEET 3 OF 3 FOR DETAILS.

DRAWING NOT TO SCALE. FOLLOW DIMENSIONS.

MINIMUM CLEARANCE TO REINFORCING STEEL SHALL BE 1½".

LAP LONGITUDINAL BARS A MINIMUM OF 23" AT SPLICES.

BEVELED HEADWALL SHALL BE LOCATED AT UPSTREAM END.

(a) SAME SIZE AND SPACING AS ADJACENT B BARS

(b) VARIES, 12" MAXIMUM

(c) J4 BAR SPACING

(d) SAME SIZE AND SPACING AS A2 BARS

(e) A2 BAR SPACING

(f) SAME SIZE AND SPACING AS A1 BARS

(g) A1 BAR SPACING

MISSOURI HIGHWAYS AND TRANSPORTATION COMMISSION
105 WEST CAPITOL
JEFFERSON CITY, MO 65102
1-888-ASK-MODOT (1-888-275-6636)

STATE OF MISSOURI
DENNIS W. HECKMAN
NUMBER PE-27141
PROFESSIONAL ENGINEER
THIS SHEET HAS BEEN SIGNED, SEALED AND DATED ELECTRONICALLY.

CONCRETE DOUBLE BOX CULVERT

SKEW: LEFT ADVANCE
WINGS: STRAIGHT

REINFORCEMENT

DATE EFFECTIVE:	10/01/2011	703.42H	SHEET NO. 1 OF 3
DATE PREPARED:	9/29/2011		

IF A SEAL IS PRESENT ON THIS SHEET IT HAS BEEN ELECTRONICALLY SEALED AND DATED.

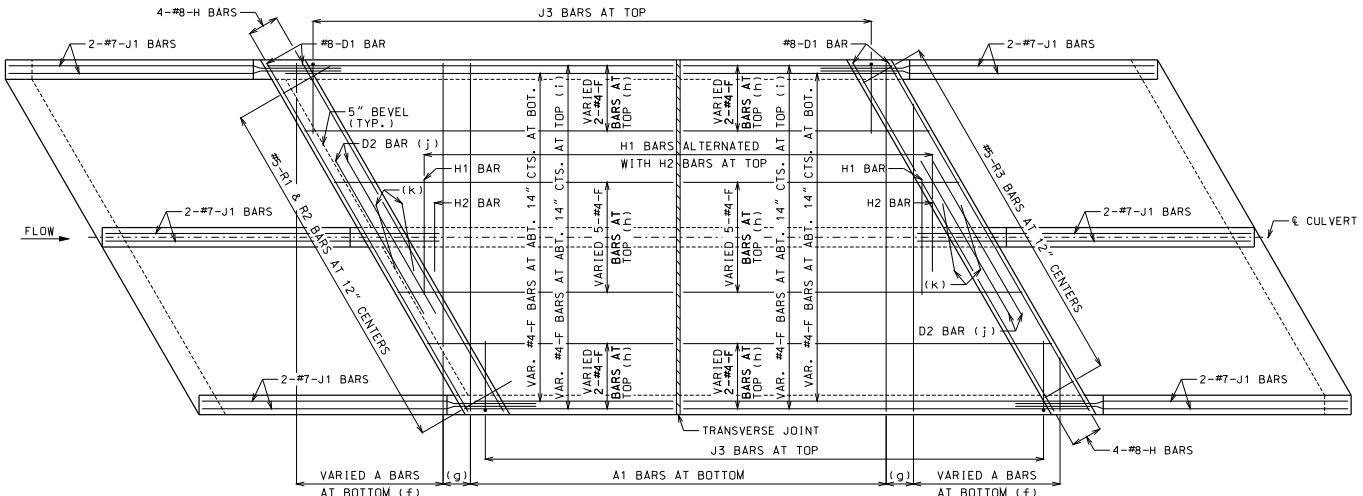

PLAN OF TOP SLAB

B BARS IN WALLS ARE NOT SHOWN FOR CLARITY.
FOR PLACEMENT. SEE SHEET 1 OF 3.

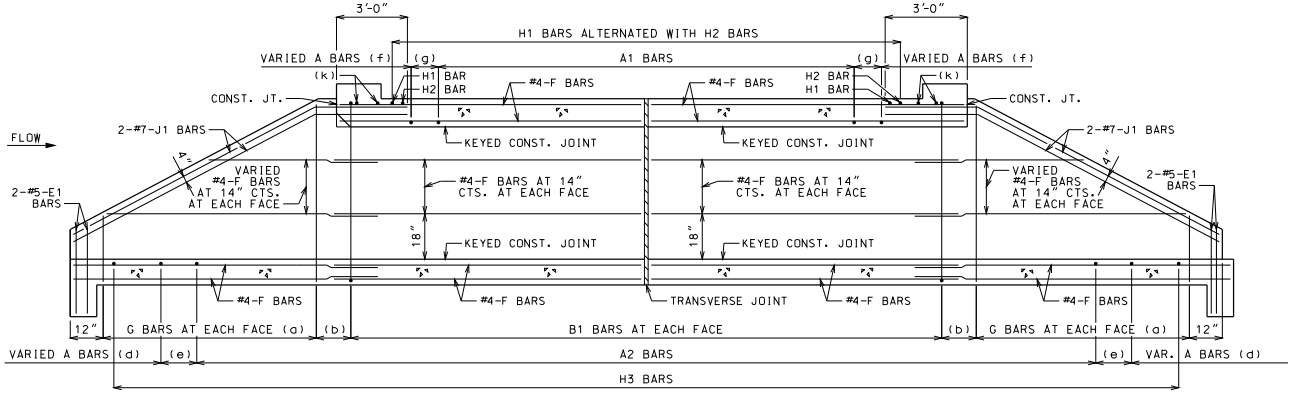

SECTION NEAR INTERIOR WALL

J1 BARS MAY BE BENT IN FIELD OR SHOP.

GENERAL NOTES:

FOR SECTIONS THRU BARREL, WINGS AND HEADWALLS, SEE SHEET 3 OF 3. FOR BAR SIZES, SPACING AND DIMENSIONS OF ALL REINFORCEMENT EXCEPT J5 BARS, SEE 703.47. FOR J5 BARS, SEE 703.37.

CONSTRUCTION JOINT KEY NOT SHOWN FOR CLARITY IN PLAN AND SECTION. SEE SHEET 3 OF 3 FOR DETAILS.

DRAWING NOT TO SCALE. FOLLOW DIMENSIONS.

MINIMUM CLEARANCE TO REINFORCING STEEL SHALL BE 1½".

LAP LONGITUDINAL BARS A MINIMUM OF 23" AT SPLICES.

BEVELED HEADWALL SHALL BE LOCATED AT UPSTREAM END.

(a) SAME SIZE AND SPACING AS ADJACENT B BARS

(b) VARIES, 12" MAXIMUM

(c) NOT SPECIFIED ON THIS SHEET

(d) SAME SIZE AND SPACING AS A2 BARS

(e) A2 BAR SPACING

(f) SAME SIZE AND SPACING AS A1 BARS

(g) A1 BAR SPACING

(h) FOR DESIGN FILLS OVER 2'-0"

(i) FOR DESIGN FILLS 2'-0" OR LESS

(j) NOT REQUIRED FOR CLEAR SPANS ≤ 10'-0"
#8 FOR CLEAR SPAN > 10'-0"
#9 FOR CLEAR SPAN > 13'-0"

IF REQUIRED, THE MINIMUM LENGTH EACH SIDE OF ℄ WALL SHALL BE THE GREATER OF 48 BAR DIAMETERS OR ¼ CLEAR SPAN. THE CLEAR SPAN IS PARALLEL TO LONG DIRECTION OF HEADWALL.

(k) H2 BARS AS REQUIRED. QUANTITY OF BARS VARIES WITH SKEW.

IF A SEAL IS PRESENT ON THIS SHEET IT HAS BEEN ELECTRONICALLY SEALED AND DATED.

MISSOURI HIGHWAYS AND TRANSPORTATION COMMISSION
105 WEST CAPITOL
JEFFERSON CITY, MO 65102
1-888-ASK-MODOT (1-888-275-6636)

STATE OF MISSOURI DENNIS W. HECKMAN NUMBER PE-27141 PROFESSIONAL ENGINEER
THIS SHEET HAS BEEN SIGNED, SEALED AND DATED ELECTRONICALLY.

CONCRETE DOUBLE BOX CULVERT

SKEW: LEFT ADVANCE
WINGS: STRAIGHT

REINFORCEMENT

DATE EFFECTIVE: 10/01/2011
DATE PREPARED: 9/8/2011

703.42H

SHEET NO. 2 OF 3

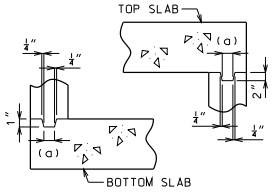

KEYED CONSTRUCTION JOINT

(a) APPROXIMATELY ONE-THIRD OF WALL THICKNESS

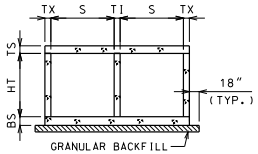

GRANULAR BACKFILL LIMITS AND MEMBER DIMENSIONS

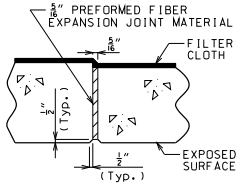

TRANSVERSE JOINT THRU BARREL

PREFORMED FIBER EXPANSION JOINT MATERIAL SHALL BE SECURELY STITCHED TO ONE FACE OF THE CONCRETE WITH NO. 10 GAGE COPPER WIRE OR NO. 12 GAGE SOFT DRAWN GALVANIZED STEEL WIRE.

FILTER CLOTH 3 FEET IN WIDTH AND DOUBLE THICKNESS SHALL BE CENTERED ON TRANSVERSE JOINTS IN TOP SLAB AND SIDEWALLS WITH EDGES SEALED WITH MASTIC OR TWO SIDED TAPE. FILTER CLOTH SHALL BE A SUBSURFACE DRAINAGE GEOTEXTILE IN ACCORDANCE WITH SECTION 1011 OF THE STANDARD SPECIFICATIONS FOR HIGHWAY CONSTRUCTION. COST OF FURNISHING AND INSTALLING FILTER CLOTH WILL BE CONSIDERED COMPLETELY COVERED BY THE CONTRACT UNIT PRICE FOR OTHER ITEMS.

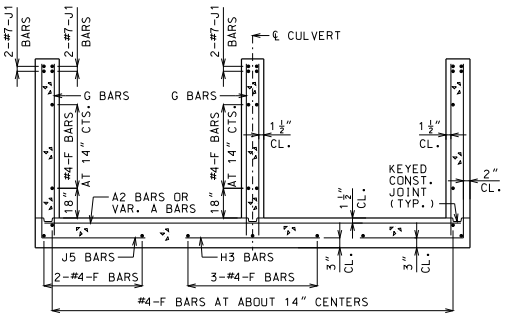

UPSTREAM AND DOWNSTREAM WINGS REINFORCEMENT

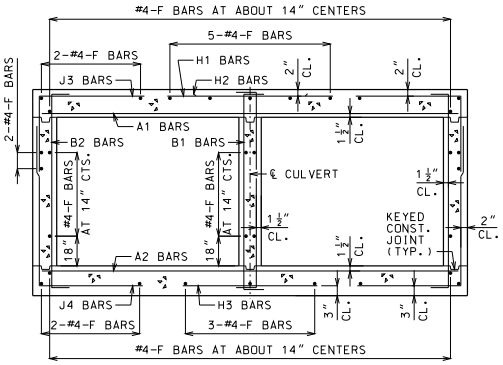

BARREL REINFORCEMENT

FOR DESIGN FILLS OVER 2'-0"

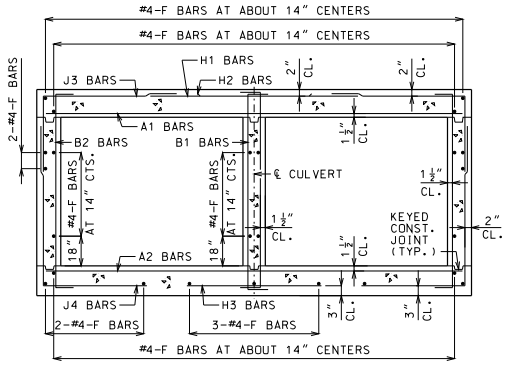

BARREL REINFORCEMENT

FOR DESIGN FILLS 2'-0" OR LESS

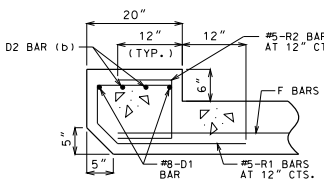

UPSTREAM HEADWALL REINFORCEMENT

NEAR INTERIOR WALL

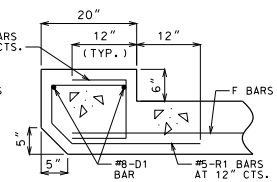

UPSTREAM HEADWALL REINFORCEMENT

NEAR MIDSPAN

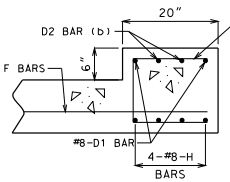

DOWNSTREAM HEADWALL REINFORCEMENT

NEAR INTERIOR WALL

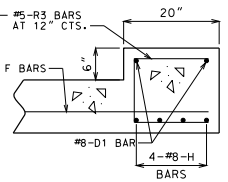

DOWNSTREAM HEADWALL REINFORCEMENT

NEAR MIDSPAN

(b) #8 FOR CLEAR SPAN > 10'-0"
#9 FOR CLEAR SPAN > 13'-0"
NOT REQUIRED FOR CLEAR SPANS ≤ 10'-0"

IF D2 BARS ARE REQUIRED, THE MINIMUM LENGTH EACH SIDE OF ℄ WALL SHALL BE THE GREATER OF 48 BAR DIAMETERS OR ¼ CLEAR SPAN. THE CLEAR SPAN IS PARALLEL TO LONG DIRECTION OF HEADWALL.

GENERAL NOTES:

FOR MEMBER THICKNESS AND FOR BAR SIZES, SPACING AND DIMENSIONS OF ALL REINFORCEMENT EXCEPT J5 BARS, SEE 703.47. FOR J5 BARS, SEE 703.37.

BARREL AND WINGS SECTIONS ARE SYMMETRICAL ABOUT AND NORMAL TO ℄ CULVERT. HEADWALL SECTIONS ARE NORMAL TO LONG DIRECTION OF HEADWALL.

DRAWING NOT TO SCALE. FOLLOW DIMENSIONS.

MINIMUM CLEARANCE TO REINFORCING STEEL SHALL BE 1½".

MISSOURI HIGHWAYS AND TRANSPORTATION COMMISSION
105 WEST CAPITOL
JEFFERSON CITY, MO 65102
1-888-ASK-MODOT (1-888-275-6636)

STATE OF MISSOURI
DENNIS W. HECKMAN
NUMBER PE-27141
PROFESSIONAL ENGINEER
THIS SHEET HAS BEEN SIGNED, SEALED AND DATED ELECTRONICALLY.

CONCRETE DOUBLE BOX CULVERT

SKEW: LEFT ADVANCE
WINGS: STRAIGHT

SECTIONS

DATE EFFECTIVE:	10/01/2011	703.42H	SHEET NO. 3 OF 3
DATE PREPARED:	9/8/2011		

IF A SEAL IS PRESENT ON THIS SHEET IT HAS BEEN ELECTRONICALLY SEALED AND DATED.

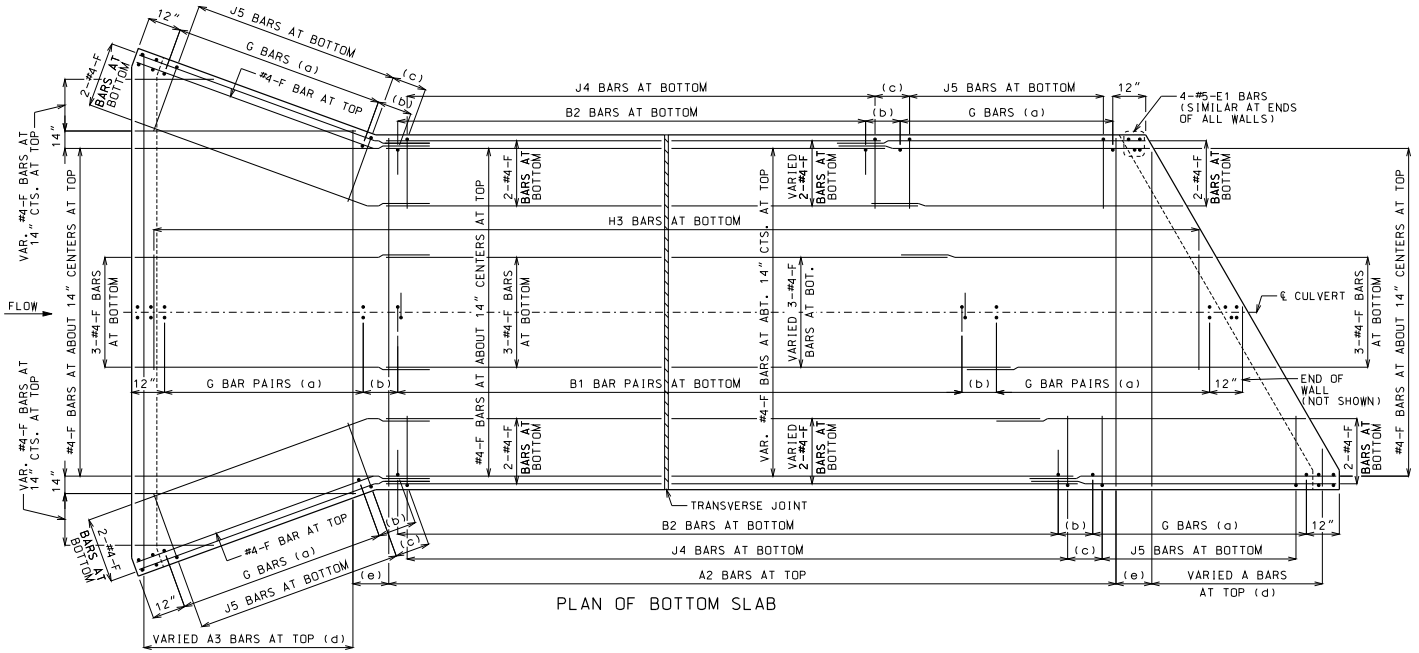

PLAN OF BOTTOM SLAB

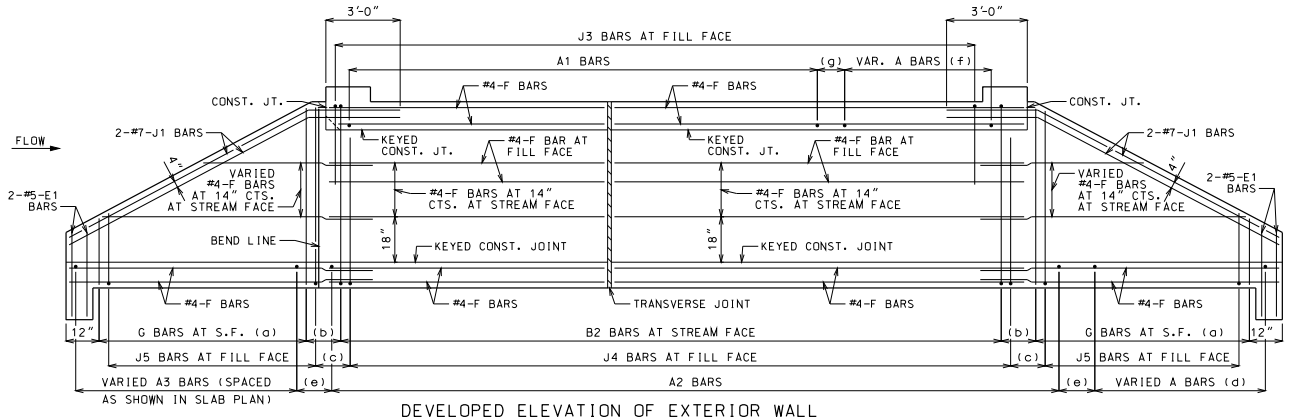

DEVELOPED ELEVATION OF EXTERIOR WALL

J1 BARS MAY BE BENT IN FIELD OR SHOP.

LAYING OUT TRANVERSE JOINTS

UNLESS SHOWN ON BRIDGE PLANS

USE A TRANSVERSE JOINT WHEN BARREL LENGTH IS OVER 80 FEET. USE ADDITIONAL JOINTS TO LIMIT CUT SECTION LENGTH AND END SECTION BARREL LENGTH MEASURED ALONG CENTERLINE OF CULVERT TO 50 FEET.

MINIMUM END SECTION LENGTH SHALL BE 3 FEET MEASURED ALONG THE SHORTEST WALL FROM THE INSIDE FACE OF HEADWALL TO THE TRANSVERSE JOINT.

TO AVOID LOCATING TRANSVERSE JOINTS UNDER A TRAVELED WAY WITH DESIGN FILLS 2 FEET OR LESS THE FOLLOWING SHALL APPLY:

BARREL LENGTH UP TO 90 FEET WITHOUT A TRANSVERSE JOINT

CUT SECTION LENGTHS UP TO 60 FEET

WHEN BARREL AND CUT SECTION LENGTH RESTRICTIONS REQUIRE TRANSVERSE JOINTS TO BE LOCATED UNDER A TRAVELED WAY WITH DESIGN FILLS 2 FEET OR LESS, THE JOINTS SHALL BE LOCATED TO MINIMIZE THE LENGTH OF JOINT UNDER THE TRAVELED WAY.

TRAVELED WAY IS THE ROADWAY WIDTH MINUS SHOULDER WIDTHS.

FOR CUT SECTION DETAILS, SEE 703.46.

GENERAL NOTES:

FOR SECTIONS THRU BARREL, WINGS AND HEADWALLS, SEE SHEET 3 OF 3. FOR BAR SIZES, SPACING AND DIMENSIONS OF ALL REINFORCEMENT EXCEPT J5 BARS, SEE 703.47. FOR J5 BARS, SEE 703.37.

CONSTRUCTION JOINT KEY NOT SHOWN FOR CLARITY IN PLAN AND ELEVATION, SEE SHEET 3 OF 3 FOR DETAILS.

DRAWING NOT TO SCALE. FOLLOW DIMENSIONS.

MINIMUM CLEARANCE TO REINFORCING STEEL SHALL BE 1½".

LAP LONGITUDINAL BARS A MINIMUM OF 23" AT SPLICES.

BEVELED HEADWALL SHALL BE LOCATED AT UPSTREAM END.

(a) SAME SIZE AND SPACING AS ADJACENT B BARS

(b) VARIES, 12" MAXIMUM

(c) J4 BAR SPACING

(d) SAME SIZE AND SPACING AS A2 BARS

(e) A2 BAR SPACING

(f) SAME SIZE AND SPACING AS A1 BARS

(g) A1 BAR SPACING

MISSOURI HIGHWAYS AND TRANSPORTATION COMMISSION
105 WEST CAPITOL
JEFFERSON CITY, MO 65102
1-888-ASK-MODOT (1-888-275-6636)

STATE OF MISSOURI
DENNIS W. HECKMAN
NUMBER PE-27141
PROFESSIONAL ENGINEER
THIS SHEET HAS BEEN SIGNED, SEALED AND DATED ELECTRONICALLY.

CONCRETE DOUBLE BOX CULVERT

SKEW: LEFT ADVANCE
WINGS: FLARED

REINFORCEMENT

DATE EFFECTIVE:	10/01/2011	703.43H	SHEET NO. 1 OF 3
DATE PREPARED:	9/8/2011		

IF A SEAL IS PRESENT ON THIS SHEET IT HAS BEEN ELECTRONICALLY SEALED AND DATED.

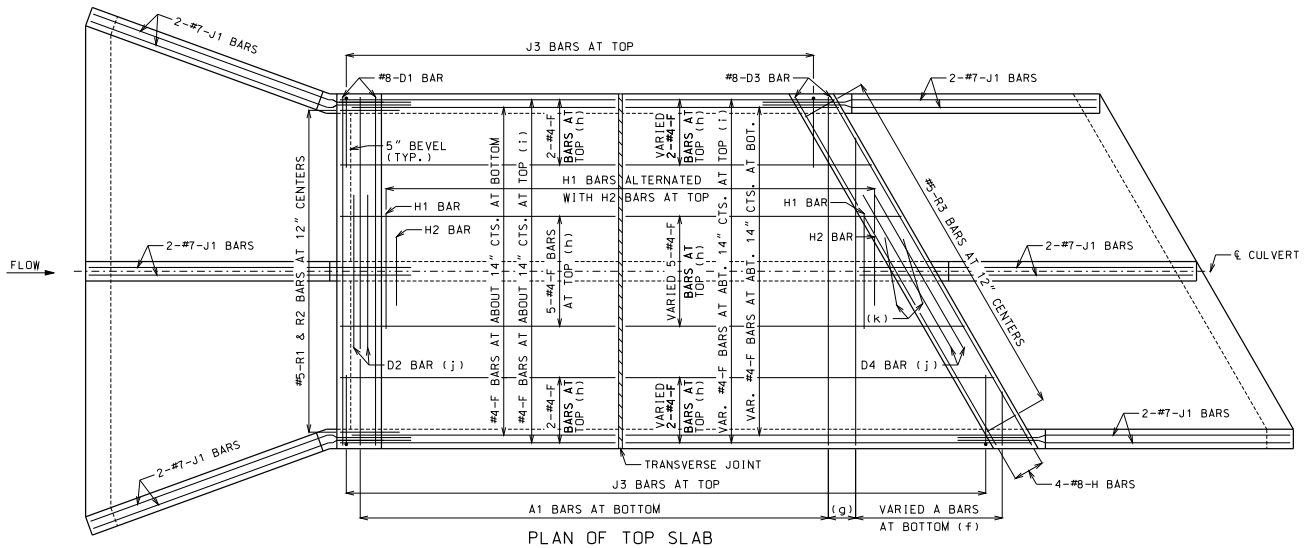

PLAN OF TOP SLAB

B BARS IN WALLS ARE NOT SHOWN FOR CLARITY.
FOR PLACEMENT, SEE SHEET 1 OF 3.

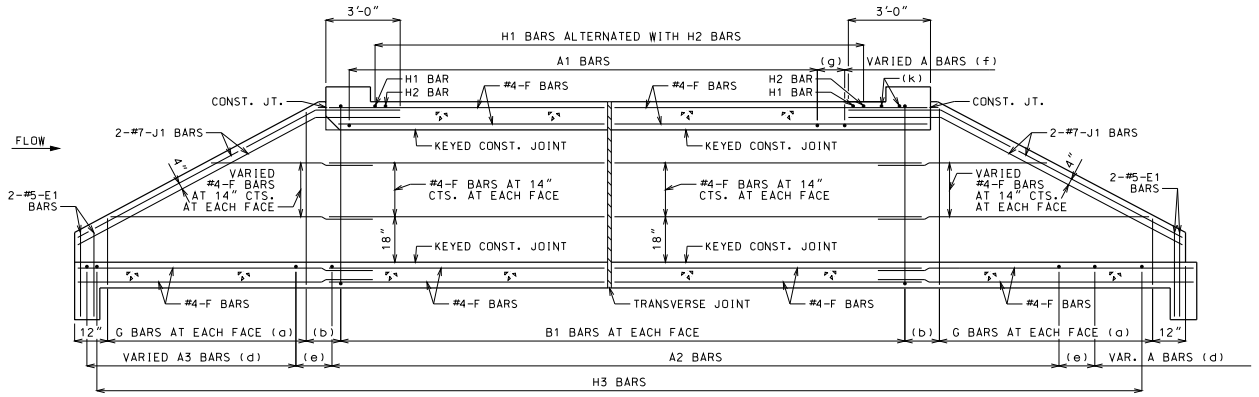

SECTION NEAR INTERIOR WALL

J1 BARS MAY BE BENT IN FIELD OR SHOP.

GENERAL NOTES:

FOR SECTIONS THRU BARREL, WINGS AND HEADWALLS, SEE SHEET 3 OF 3. FOR BAR SIZES, SPACING AND DIMENSIONS OF ALL REINFORCEMENT EXCEPT J5 BARS, SEE 703.47. FOR J5 BARS, SEE 703.37.

CONSTRUCTION JOINT KEY NOT SHOWN FOR CLARITY IN PLAN AND SECTION, SEE SHEET 3 OF 3 FOR DETAILS.

DRAWING NOT TO SCALE. FOLLOW DIMENSIONS.

MINIMUM CLEARANCE TO REINFORCING STEEL SHALL BE 1½".

LAP LONGITUDINAL BARS A MINIMUM OF 23" AT SPLICES.

BEVELED HEADWALL SHALL BE LOCATED AT UPSTREAM END.

(a) SAME SIZE AND SPACING AS ADJACENT B BARS

(b) VARIES, 12" MAXIMUM

(c) NOT SPECIFIED ON THIS SHEET

(d) SAME SIZE AND SPACING AS A2 BARS

(e) A2 BAR SPACING

(f) SAME SIZE AND SPACING AS A1 BARS

(g) A1 BAR SPACING

(h) FOR DESIGN FILLS OVER 2'-0"

(i) FOR DESIGN FILLS 2'-0" OR LESS

(j) NOT REQUIRED FOR CLEAR SPANS ≤ 10'-0"
#8 FOR CLEAR SPAN > 10'-0"
#9 FOR CLEAR SPAN > 13'-0"

IF REQUIRED, THE MINIMUM LENGTH EACH SIDE OF ℄ WALL SHALL BE THE GREATER OF 48 BAR DIAMETERS OR ¼ CLEAR SPAN. THE CLEAR SPAN IS PARALLEL TO LONG DIRECTION OF HEADWALL.

(k) H2 BARS AS REQUIRED, QUANTITY OF BARS VARIES WITH SKEW.

IF A SEAL IS PRESENT ON THIS SHEET IT HAS BEEN ELECTRONICALLY SEALED AND DATED.

MISSOURI HIGHWAYS AND TRANSPORTATION COMMISSION
105 WEST CAPITOL
JEFFERSON CITY, MO 65102
1-888-ASK-MODOT (1-888-275-6636)

STATE OF MISSOURI
DENNIS W. HECKMAN
NUMBER PE-27141
PROFESSIONAL ENGINEER
THIS SHEET HAS BEEN SIGNED, SEALED AND DATED ELECTRONICALLY.

CONCRETE DOUBLE BOX CULVERT

SKEW: LEFT ADVANCE
WINGS: FLARED

REINFORCEMENT

DATE EFFECTIVE:	10/01/2011	703.43H	SHEET NO. 2 OF 3
DATE PREPARED:	9/8/2011		

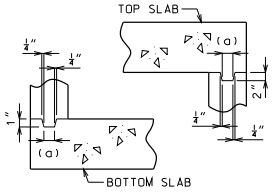

KEYED CONSTRUCTION JOINT

(a) APPROXIMATELY ONE-THIRD OF WALL THICKNESS

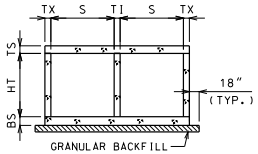

GRANULAR BACKFILL LIMITS AND MEMBER DIMENSIONS

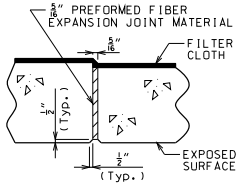

TRANSVERSE JOINT THRU BARREL

PREFORMED FIBER EXPANSION JOINT MATERIAL SHALL BE SECURELY STITCHED TO ONE FACE OF THE CONCRETE WITH NO. 10 GAGE COPPER WIRE OR NO. 12 GAGE SOFT DRAWN GALVANIZED STEEL WIRE.

FILTER CLOTH 3 FEET IN WIDTH AND DOUBLE THICKNESS SHALL BE CENTERED ON TRANSVERSE JOINTS IN TOP SLAB AND SIDEWALLS WITH EDGES SEALED WITH MASTIC OR TWO SIDED TAPE. FILTER CLOTH SHALL BE A SUBSURFACE DRAINAGE GEOTEXTILE IN ACCORDANCE WITH SECTION 1011 OF THE STANDARD SPECIFICATIONS FOR HIGHWAY CONSTRUCTION. COST OF FURNISHING AND INSTALLING FILTER CLOTH WILL BE CONSIDERED COMPLETELY COVERED BY THE CONTRACT UNIT PRICE FOR OTHER ITEMS.

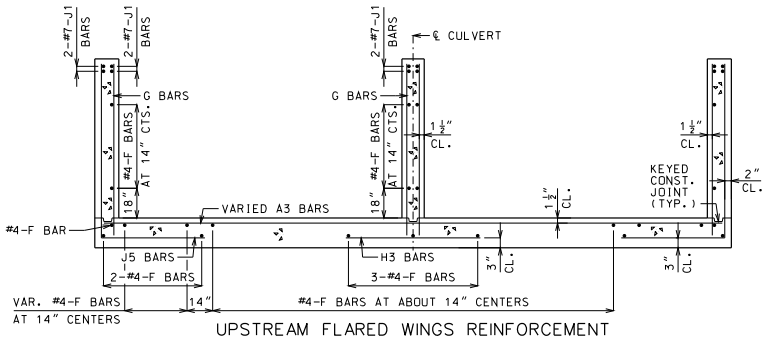

UPSTREAM FLARED WINGS REINFORCEMENT

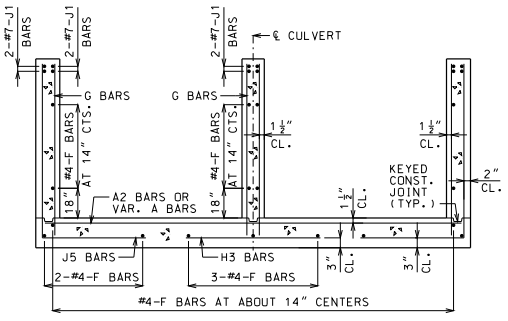

DOWNSTREAM WINGS REINFORCEMENT

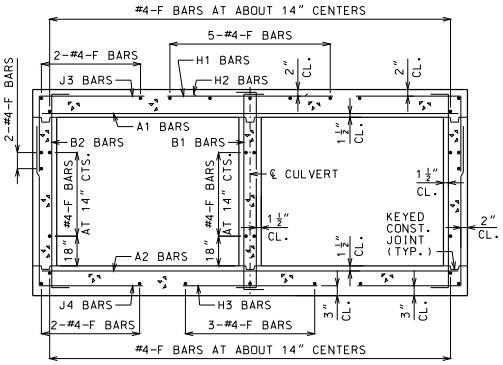

BARREL REINFORCEMENT

FOR DESIGN FILLS OVER 2'-0"

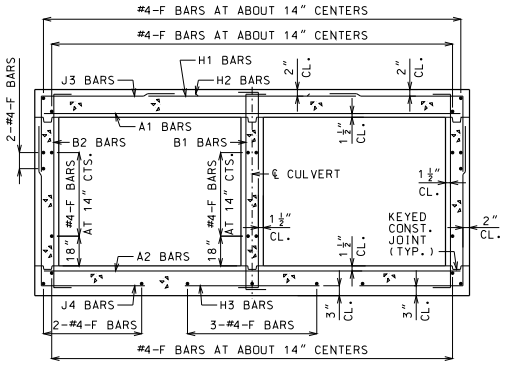

BARREL REINFORCEMENT

FOR DESIGN FILLS 2'-0" OR LESS

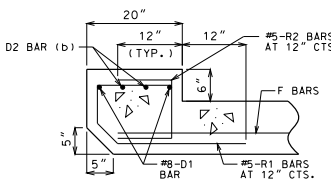

UPSTREAM HEADWALL REINFORCEMENT

NEAR INTERIOR WALL

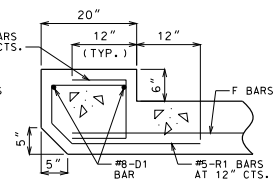

UPSTREAM HEADWALL REINFORCEMENT

NEAR MIDSPAN

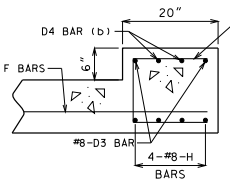

DOWNSTREAM HEADWALL REINFORCEMENT

NEAR INTERIOR WALL

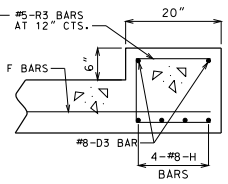

DOWNSTREAM HEADWALL REINFORCEMENT

NEAR MIDSPAN

(b) #8 FOR CLEAR SPAN > 10'-0"
#9 FOR CLEAR SPAN > 13'-0"
NOT REQUIRED FOR CLEAR SPANS ≤ 10'-0"

IF D2 AND D4 BARS ARE REQUIRED, THE MINIMUM LENGTH EACH SIDE OF ℄ WALL SHALL BE THE GREATER OF 48 BAR DIAMETERS OR ¼ CLEAR SPAN. THE CLEAR SPAN IS PARALLEL TO LONG DIRECTION OF HEADWALL.

GENERAL NOTES:

FOR MEMBER THICKNESS AND FOR BAR SIZES, SPACING AND DIMENSIONS OF ALL REINFORCEMENT EXCEPT J5 BARS, SEE 703.47. FOR J5 BARS, SEE 703.37.

BARREL AND WINGS SECTIONS ARE SYMMETRICAL ABOUT AND NORMAL TO ℄ CULVERT. HEADWALL SECTIONS ARE NORMAL TO LONG DIRECTION OF HEADWALL.

DRAWING NOT TO SCALE. FOLLOW DIMENSIONS.

MINIMUM CLEARANCE TO REINFORCING STEEL SHALL BE 1½".

MISSOURI HIGHWAYS AND TRANSPORTATION COMMISSION
105 WEST CAPITOL
JEFFERSON CITY, MO 65102
1-888-ASK-MODOT (1-888-275-6636)

STATE OF MISSOURI
DENNIS W. HECKMAN
NUMBER PE-27141
PROFESSIONAL ENGINEER
THIS SHEET HAS BEEN SIGNED, SEALED AND DATED ELECTRONICALLY.

CONCRETE DOUBLE BOX CULVERT

SKEW: LEFT ADVANCE
WINGS: FLARED

SECTIONS

DATE EFFECTIVE: 10/01/2011
DATE PREPARED: 9/8/2011

703.43H

SHEET NO. 3 OF 3

IF A SEAL IS PRESENT ON THIS SHEET IT HAS BEEN ELECTRONICALLY SEALED AND DATED.

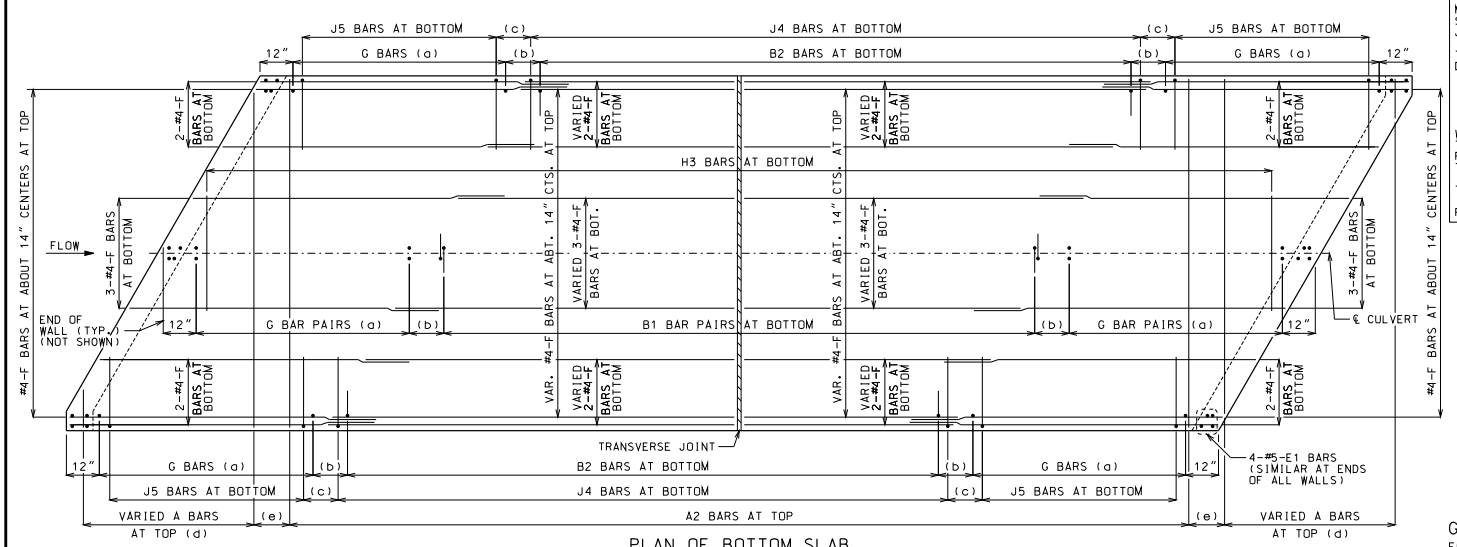

PLAN OF BOTTOM SLAB

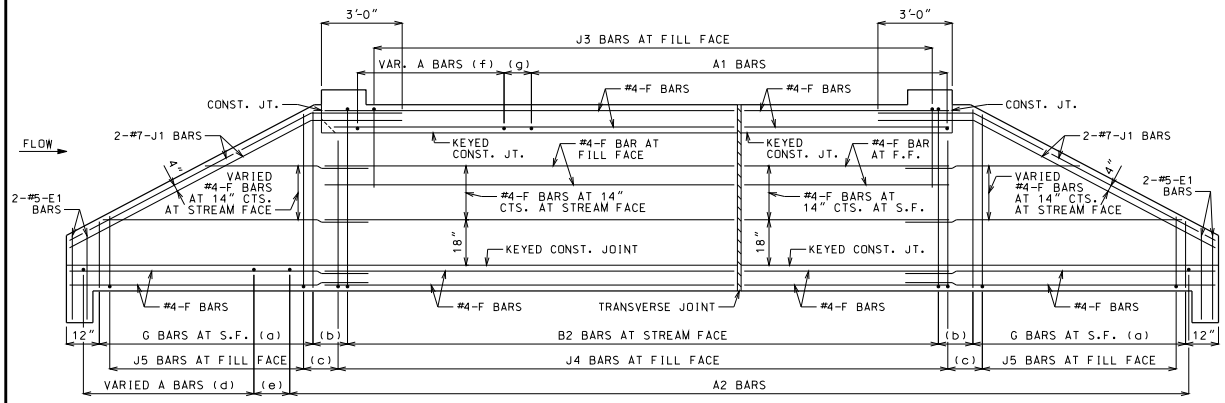

ELEVATION OF EXTERIOR WALL

J1 BARS MAY BE BENT IN FIELD OR SHOP.

LAYING OUT TRANVERSE JOINTS

UNLESS SHOWN ON BRIDGE PLANS

USE A TRANSVERSE JOINT WHEN BARREL LENGTH IS OVER 80 FEET. USE ADDITIONAL JOINTS TO LIMIT CUT SECTION LENGTH AND END SECTION BARREL LENGTH MEASURED ALONG CENTERLINE OF CULVERT TO 50 FEET.

MINIMUM END SECTION LENGTH SHALL BE 3 FEET MEASURED ALONG THE SHORTEST WALL FROM THE INSIDE FACE OF HEADWALL TO THE TRANSVERSE JOINT.

TO AVOID LOCATING TRANSVERSE JOINTS UNDER A TRAVELED WAY WITH DESIGN FILLS 2 FEET OR LESS THE FOLLOWING SHALL APPLY:

BARREL LENGTH UP TO 90 FEET WITHOUT A TRANSVERSE JOINT

CUT SECTION LENGTHS UP TO 60 FEET

WHEN BARREL AND CUT SECTION LENGTH RESTRICTIONS REQUIRE TRANSVERSE JOINTS TO BE LOCATED UNDER A TRAVELED WAY WITH DESIGN FILLS 2 FEET OR LESS, THE JOINTS SHALL BE LOCATED TO MINIMIZE THE LENGTH OF JOINT UNDER THE TRAVELED WAY.

TRAVELED WAY IS THE ROADWAY WIDTH MINUS SHOULDER WIDTHS.

FOR CUT SECTION DETAILS, SEE 703.46.

GENERAL NOTES:

FOR SECTIONS THRU BARREL, WINGS AND HEADWALLS, SEE SHEET 3 OF 3. FOR BAR SIZES, SPACING AND DIMENSIONS OF ALL REINFORCEMENT EXCEPT J5 BARS, SEE 703.47. FOR J5 BARS, SEE 703.37.

CONSTRUCTION JOINT KEY NOT SHOWN FOR CLARITY IN PLAN AND ELEVATION, SEE SHEET 3 OF 3 FOR DETAILS.

DRAWING NOT TO SCALE. FOLLOW DIMENSIONS.

MINIMUM CLEARANCE TO REINFORCING STEEL SHALL BE 1½".

LAP LONGITUDINAL BARS A MINIMUM OF 23" AT SPLICES.

BEVELED HEADWALL SHALL BE LOCATED AT UPSTREAM END.

(a) SAME SIZE AND SPACING AS ADJACENT B BARS

(b) VARIES, 12" MAXIMUM

(c) J4 BAR SPACING

(d) SAME SIZE AND SPACING AS A2 BARS

(e) A2 BAR SPACING

(f) SAME SIZE AND SPACING AS A1 BARS

(g) A1 BAR SPACING

MISSOURI HIGHWAYS AND TRANSPORTATION COMMISSION
105 WEST CAPITOL
JEFFERSON CITY, MO 65102
1-888-ASK-MODOT (1-888-275-6636)

STATE OF MISSOURI
DENNIS W. HECKMAN
NUMBER PE-27141
PROFESSIONAL ENGINEER
THIS SHEET HAS BEEN SIGNED, SEALED AND DATED ELECTRONICALLY.

CONCRETE DOUBLE BOX CULVERT

SKEW: RIGHT ADVANCE
WINGS: STRAIGHT

REINFORCEMENT

DATE EFFECTIVE: 10/01/2011
DATE PREPARED: 9/8/2011

703.44H

SHEET NO. 1 OF 3

IF A SEAL IS PRESENT ON THIS SHEET IT HAS BEEN ELECTRONICALLY SEALED AND DATED.

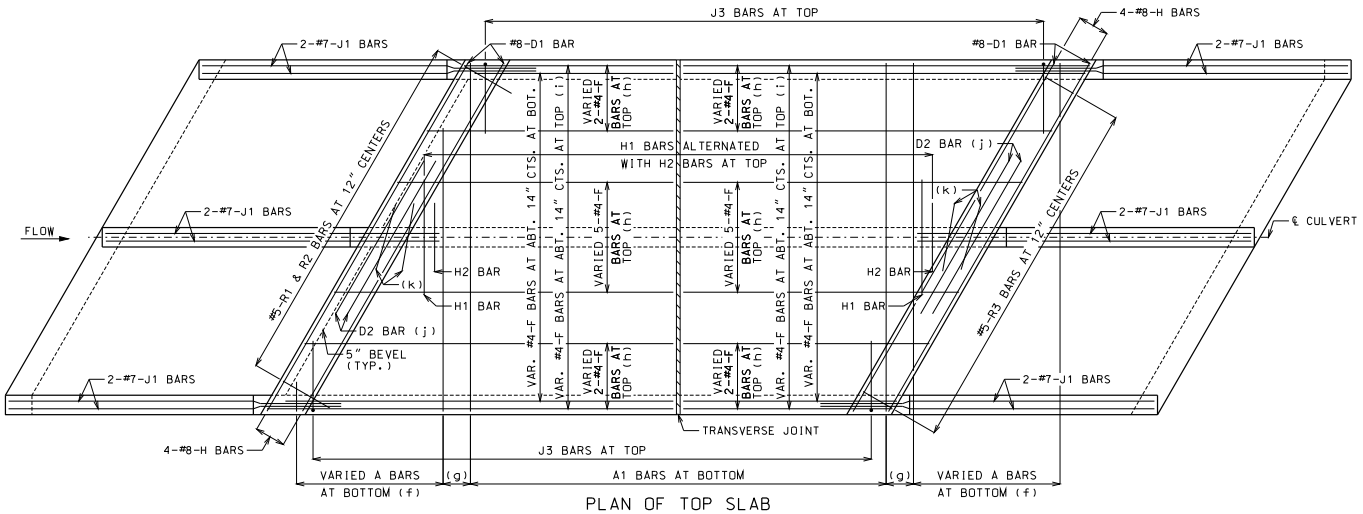

PLAN OF TOP SLAB

B BARS IN WALLS ARE NOT SHOWN FOR CLARITY.
FOR PLACEMENT. SEE SHEET 1 OF 3.

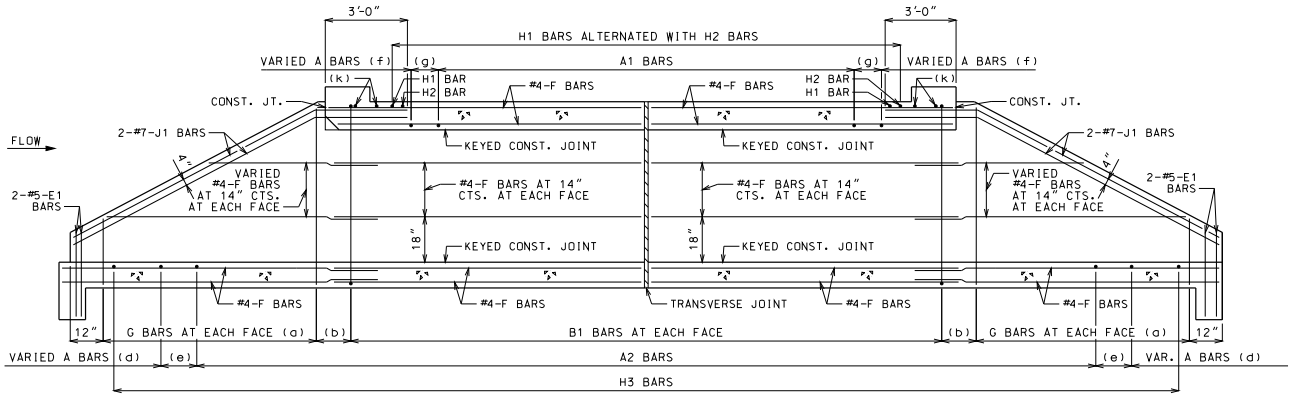

SECTION NEAR INTERIOR WALL

J1 BARS MAY BE BENT IN FIELD OR SHOP.

GENERAL NOTES:

FOR SECTIONS THRU BARREL, WINGS AND HEADWALLS, SEE SHEET 3 OF 3. FOR BAR SIZES, SPACING AND DIMENSIONS OF ALL REINFORCEMENT EXCEPT J5 BARS, SEE 703.47. FOR J5 BARS, SEE 703.37.

CONSTRUCTION JOINT KEY NOT SHOWN FOR CLARITY IN PLAN AND SECTION. SEE SHEET 3 OF 3 FOR DETAILS.

DRAWING NOT TO SCALE. FOLLOW DIMENSIONS.

MINIMUM CLEARANCE TO REINFORCING STEEL SHALL BE 1½".

LAP LONGITUDINAL BARS A MINIMUM OF 23" AT SPLICES.

BEVELED HEADWALL SHALL BE LOCATED AT UPSTREAM END.

(a) SAME SIZE AND SPACING AS ADJACENT B BARS

(b) VARIES, 12" MAXIMUM

(c) NOT SPECIFIED ON THIS SHEET

(d) SAME SIZE AND SPACING AS A2 BARS

(e) A2 BAR SPACING

(f) SAME SIZE AND SPACING AS A1 BARS

(g) A1 BAR SPACING

(h) FOR DESIGN FILLS OVER 2'-0"

(i) FOR DESIGN FILLS 2'-0" OR LESS

(j) NOT REQUIRED FOR CLEAR SPANS ≤ 10'-0"
#8 FOR CLEAR SPAN > 10'-0"
#9 FOR CLEAR SPAN > 13'-0"

IF REQUIRED, THE MINIMUM LENGTH EACH SIDE OF ℄ WALL SHALL BE THE GREATER OF 48 BAR DIAMETERS OR ¼ CLEAR SPAN. THE CLEAR SPAN IS PARALLEL TO LONG DIRECTION OF HEADWALL.

(k) H2 BARS AS REQUIRED. QUANTITY OF BARS VARIES WITH SKEW.

MISSOURI HIGHWAYS AND TRANSPORTATION COMMISSION
105 WEST CAPITOL
JEFFERSON CITY, MO 65102
1-888-ASK-MODOT (1-888-275-6636)

STATE OF MISSOURI
DENNIS W. HECKMAN
NUMBER PE-27141
PROFESSIONAL ENGINEER
THIS SHEET HAS BEEN SIGNED, SEALED AND DATED ELECTRONICALLY.

CONCRETE DOUBLE BOX CULVERT

SKEW: RIGHT ADVANCE
WINGS: STRAIGHT

REINFORCEMENT

DATE EFFECTIVE: 10/01/2011
DATE PREPARED: 9/8/2011

703.44H

SHEET NO. 2 OF 3

IF A SEAL IS PRESENT ON THIS SHEET IT HAS BEEN ELECTRONICALLY SEALED AND DATED.

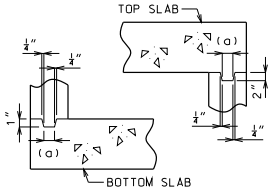

KEYED CONSTRUCTION JOINT

(a) APPROXIMATELY ONE-THIRD OF WALL THICKNESS

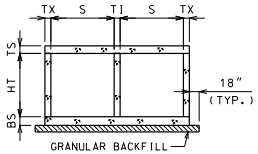

GRANULAR BACKFILL LIMITS AND MEMBER DIMENSIONS

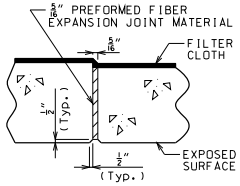

TRANSVERSE JOINT THRU BARREL

PREFORMED FIBER EXPANSION JOINT MATERIAL SHALL BE SECURELY STITCHED TO ONE FACE OF THE CONCRETE WITH NO. 10 GAGE COPPER WIRE OR NO. 12 GAGE SOFT DRAWN GALVANIZED STEEL WIRE.

FILTER CLOTH 3 FEET IN WIDTH AND DOUBLE THICKNESS SHALL BE CENTERED ON TRANSVERSE JOINTS IN TOP SLAB AND SIDEWALLS WITH EDGES SEALED WITH MASTIC OR TWO SIDED TAPE. FILTER CLOTH SHALL BE A SUBSURFACE DRAINAGE GEOTEXTILE IN ACCORDANCE WITH SECTION 1011 OF THE STANDARD SPECIFICATIONS FOR HIGHWAY CONSTRUCTION. COST OF FURNISHING AND INSTALLING FILTER CLOTH WILL BE CONSIDERED COMPLETELY COVERED BY THE CONTRACT UNIT PRICE FOR OTHER ITEMS.

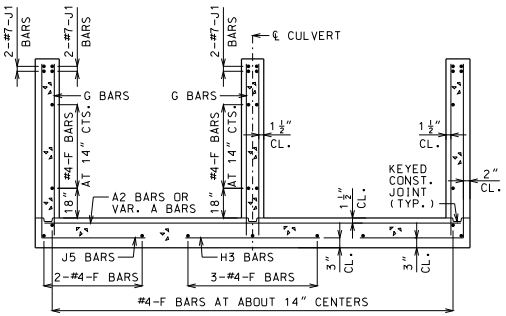

UPSTREAM AND DOWNSTREAM WINGS REINFORCEMENT

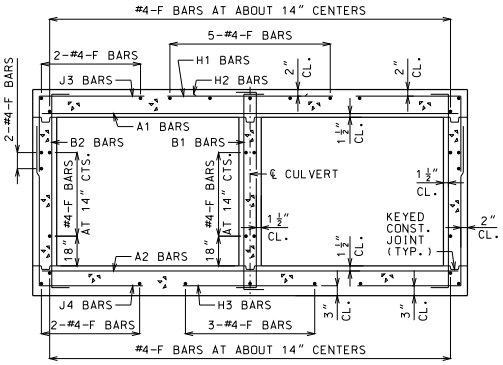

BARREL REINFORCEMENT

FOR DESIGN FILLS OVER 2'-0"

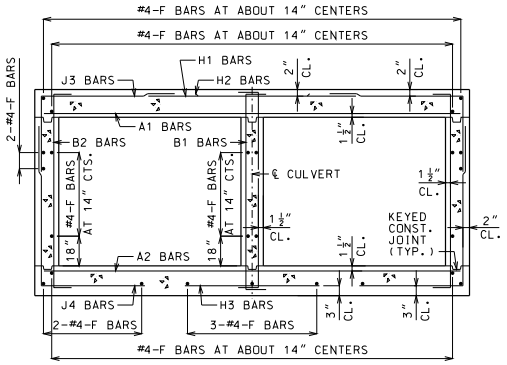

BARREL REINFORCEMENT

FOR DESIGN FILLS 2'-0" OR LESS

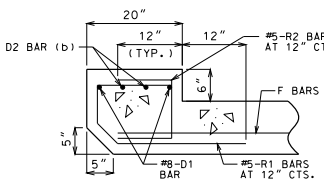

UPSTREAM HEADWALL REINFORCEMENT

NEAR INTERIOR WALL

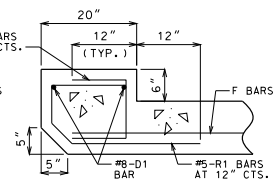

UPSTREAM HEADWALL REINFORCEMENT

NEAR MIDSPAN

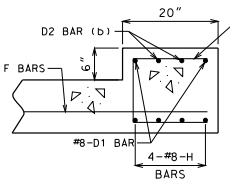

DOWNSTREAM HEADWALL REINFORCEMENT

NEAR INTERIOR WALL

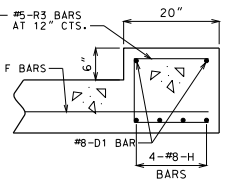

DOWNSTREAM HEADWALL REINFORCEMENT

NEAR MIDSPAN

(b) #8 FOR CLEAR SPAN > 10'-0"
#9 FOR CLEAR SPAN > 13'-0"
NOT REQUIRED FOR CLEAR SPANS ≤ 10'-0"

IF D2 BARS ARE REQUIRED, THE MINIMUM LENGTH EACH SIDE OF ℄ WALL SHALL BE THE GREATER OF 48 BAR DIAMETERS OR ¼ CLEAR SPAN. THE CLEAR SPAN IS PARALLEL TO LONG DIRECTION OF HEADWALL.

GENERAL NOTES:

FOR MEMBER THICKNESS AND FOR BAR SIZES, SPACING AND DIMENSIONS OF ALL REINFORCEMENT EXCEPT J5 BARS, SEE 703.47. FOR J5 BARS, SEE 703.37.

BARREL AND WINGS SECTIONS ARE SYMMETRICAL ABOUT AND NORMAL TO ℄ CULVERT. HEADWALL SECTIONS ARE NORMAL TO LONG DIRECTION OF HEADWALL.

DRAWING NOT TO SCALE. FOLLOW DIMENSIONS.

MINIMUM CLEARANCE TO REINFORCING STEEL SHALL BE 1½".

MISSOURI HIGHWAYS AND TRANSPORTATION COMMISSION
105 WEST CAPITOL
JEFFERSON CITY, MO 65102
1-888-ASK-MODOT (1-888-275-6636)

STATE OF MISSOURI
DENNIS W. HECKMAN
NUMBER PE-27141
PROFESSIONAL ENGINEER
THIS SHEET HAS BEEN SIGNED, SEALED AND DATED ELECTRONICALLY.

CONCRETE DOUBLE BOX CULVERT

SKEW: RIGHT ADVANCE
WINGS: STRAIGHT

SECTIONS

DATE EFFECTIVE:	10/01/2011	703.44H	SHEET NO. 3 OF 3
DATE PREPARED:	9/8/2011		

IF A SEAL IS PRESENT ON THIS SHEET IT HAS BEEN ELECTRONICALLY SEALED AND DATED.

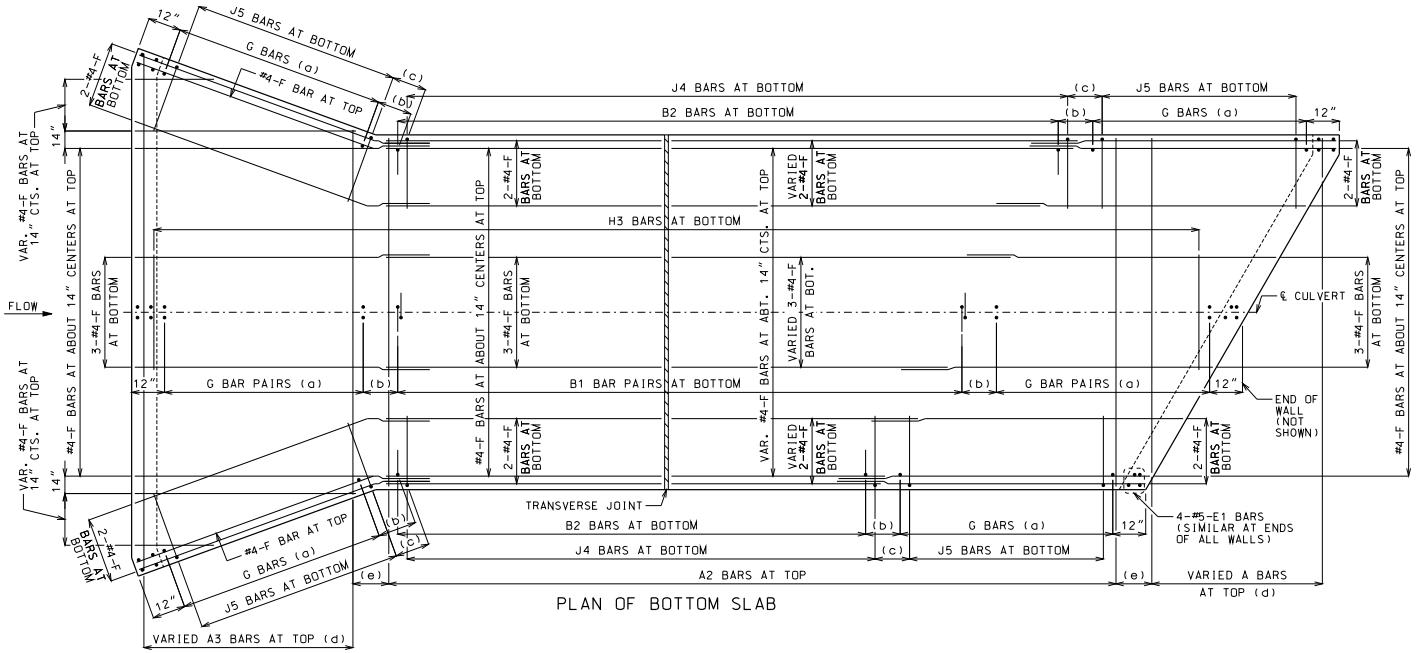

PLAN OF BOTTOM SLAB

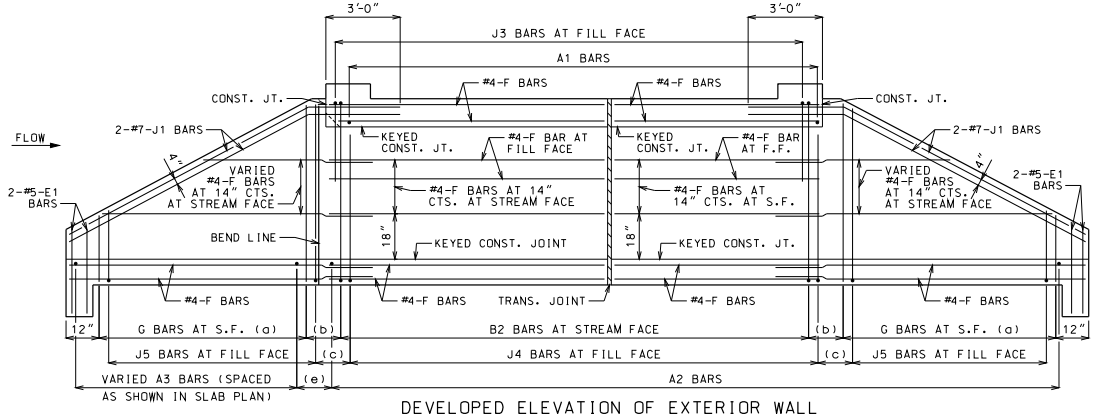

DEVELOPED ELEVATION OF EXTERIOR WALL

J1 BARS MAY BE BENT IN FIELD OR SHOP.

LAYING OUT TRANVERSE JOINTS

UNLESS SHOWN ON BRIDGE PLANS

USE A TRANSVERSE JOINT WHEN BARREL LENGTH IS OVER 80 FEET. USE ADDITIONAL JOINTS TO LIMIT CUT SECTION LENGTH AND END SECTION BARREL LENGTH MEASURED ALONG CENTERLINE OF CULVERT TO 50 FEET.

MINIMUM END SECTION LENGTH SHALL BE 3 FEET MEASURED ALONG THE SHORTEST WALL FROM THE INSIDE FACE OF HEADWALL TO THE TRANSVERSE JOINT.

TO AVOID LOCATING TRANSVERSE JOINTS UNDER A TRAVELED WAY WITH DESIGN FILLS 2 FEET OR LESS THE FOLLOWING SHALL APPLY:

BARREL LENGTH UP TO 90 FEET WITHOUT A TRANSVERSE JOINT

CUT SECTION LENGTHS UP TO 60 FEET

WHEN BARREL AND CUT SECTION LENGTH RESTRICTIONS REQUIRE TRANSVERSE JOINTS TO BE LOCATED UNDER A TRAVELED WAY WITH DESIGN FILLS 2 FEET OR LESS, THE JOINTS SHALL BE LOCATED TO MINIMIZE THE LENGTH OF JOINT UNDER THE TRAVELED WAY.

TRAVELED WAY IS THE ROADWAY WIDTH MINUS SHOULDER WIDTHS.

FOR CUT SECTION DETAILS. SEE 703.46.

GENERAL NOTES:

FOR SECTIONS THRU BARREL, WINGS AND HEADWALLS, SEE SHEET 3 OF 3. FOR BAR SIZES, SPACING AND DIMENSIONS OF ALL REINFORCEMENT EXCEPT J5 BARS, SEE 703.47. FOR J5 BARS, SEE 703.37.

CONSTRUCTION JOINT KEY NOT SHOWN FOR CLARITY IN PLAN AND ELEVATION, SEE SHEET 3 OF 3 FOR DETAILS.

DRAWING NOT TO SCALE. FOLLOW DIMENSIONS.

MINIMUM CLEARANCE TO REINFORCING STEEL SHALL BE 1½".

LAP LONGITUDINAL BARS A MINIMUM OF 23" AT SPLICES.

BEVELED HEADWALL SHALL BE LOCATED AT UPSTREAM END.

(a) SAME SIZE AND SPACING AS ADJACENT B BARS

(b) VARIES, 12" MAXIMUM

(c) J4 BAR SPACING

(d) SAME SIZE AND SPACING AS A2 BARS

(e) A2 BAR SPACING

MISSOURI HIGHWAYS AND TRANSPORTATION COMMISSION
105 WEST CAPITOL
JEFFERSON CITY, MO 65102
1-888-ASK-MODOT (1-888-275-6636)

STATE OF MISSOURI — DENNIS W. HECKMAN — NUMBER PE-27141 — PROFESSIONAL ENGINEER
THIS SHEET HAS BEEN SIGNED, SEALED AND DATED ELECTRONICALLY.

CONCRETE DOUBLE BOX CULVERT

SKEW: RIGHT ADVANCE
WINGS: FLARED

REINFORCEMENT

DATE EFFECTIVE:	10/01/2011	703.45C	SHEET NO. 1 OF 3
DATE PREPARED:	9/8/2011		

IF A SEAL IS PRESENT ON THIS SHEET IT HAS BEEN ELECTRONICALLY SEALED AND DATED.

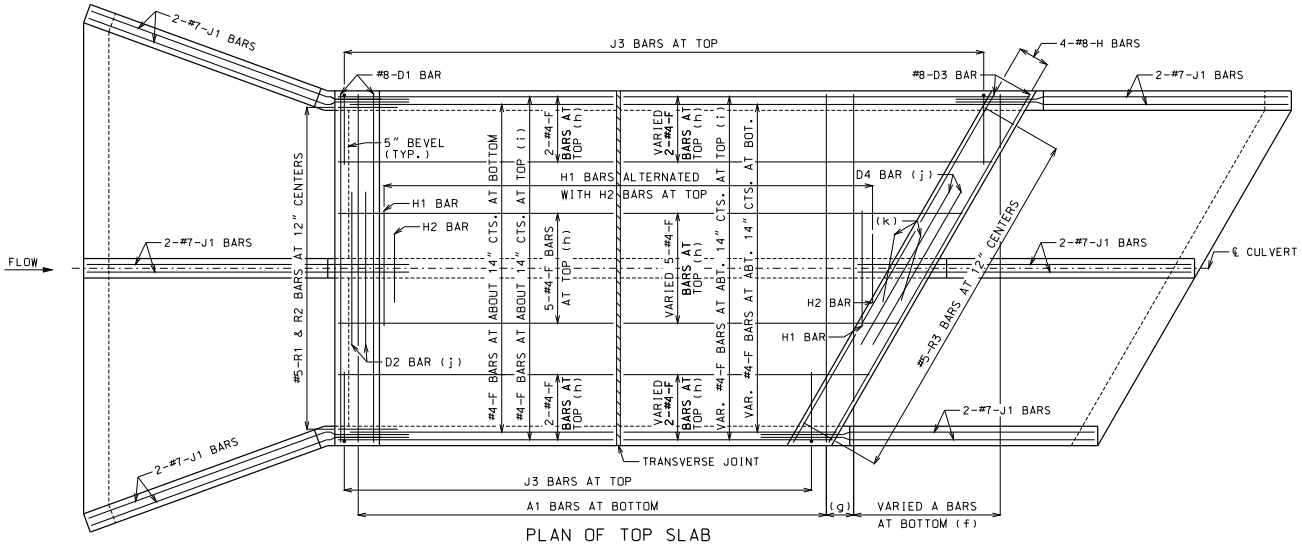

PLAN OF TOP SLAB

B BARS IN WALLS ARE NOT SHOWN FOR CLARITY.
FOR PLACEMENT, SEE SHEET 1 OF 3.

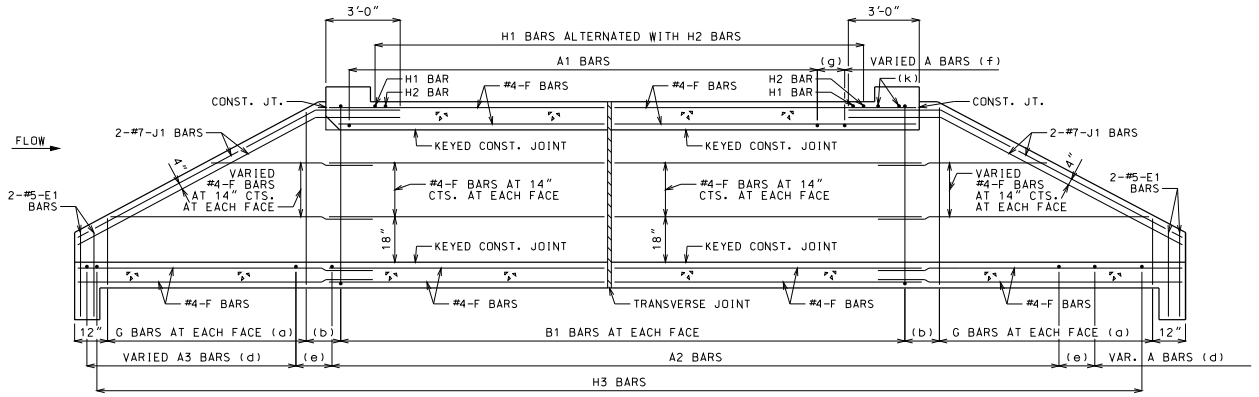

SECTION NEAR INTERIOR WALL

J1 BARS MAY BE BENT IN FIELD OR SHOP.

GENERAL NOTES:

FOR SECTIONS THRU BARREL, WINGS AND HEADWALLS, SEE SHEET 3 OF 3. FOR BAR SIZES, SPACING AND DIMENSIONS OF ALL REINFORCEMENT EXCEPT J5 BARS, SEE 703.47. FOR J5 BARS, SEE 703.37.

CONSTRUCTION JOINT KEY NOT SHOWN FOR CLARITY IN PLAN AND SECTION, SEE SHEET 3 OF 3 FOR DETAILS.

DRAWING NOT TO SCALE. FOLLOW DIMENSIONS.

MINIMUM CLEARANCE TO REINFORCING STEEL SHALL BE 1½".

LAP LONGITUDINAL BARS A MINIMUM OF 23" AT SPLICES.

BEVELED HEADWALL SHALL BE LOCATED AT UPSTREAM END.

(a) SAME SIZE AND SPACING AS ADJACENT B BARS

(b) VARIES, 12" MAXIMUM

(c) NOT SPECIFIED ON THIS SHEET

(d) SAME SIZE AND SPACING AS A2 BARS

(e) A2 BAR SPACING

(f) SAME SIZE AND SPACING AS A1 BARS

(g) A1 BAR SPACING

(h) FOR DESIGN FILLS OVER 2'-0"

(i) FOR DESIGN FILLS 2'-0" OR LESS

(j) NOT REQUIRED FOR CLEAR SPANS ≤ 10'-0"
#8 FOR CLEAR SPAN > 10'-0"
#9 FOR CLEAR SPAN > 13'-0"

IF REQUIRED, THE MINIMUM LENGTH EACH SIDE OF ℄ WALL SHALL BE THE GREATER OF 48 BAR DIAMETERS OR ¼ CLEAR SPAN. THE CLEAR SPAN IS PARALLEL TO LONG DIRECTION OF HEADWALL.

(k) H2 BARS AS REQUIRED. QUANTITY OF BARS VARIES WITH SKEW.

IF A SEAL IS PRESENT ON THIS SHEET IT HAS BEEN ELECTRONICALLY SEALED AND DATED.

MISSOURI HIGHWAYS AND TRANSPORTATION COMMISSION
105 WEST CAPITOL
JEFFERSON CITY, MO 65102
1-888-ASK-MODOT (1-888-275-6636)

STATE OF MISSOURI
DENNIS W. HECKMAN
NUMBER PE-27141
PROFESSIONAL ENGINEER
THIS SHEET HAS BEEN SIGNED, SEALED AND DATED ELECTRONICALLY.

CONCRETE DOUBLE BOX CULVERT

SKEW: RIGHT ADVANCE
WINGS: FLARED

REINFORCEMENT

DATE EFFECTIVE:	10/01/2011	703.45C	SHEET NO. 2 OF 3
DATE PREPARED:	9/8/2011		

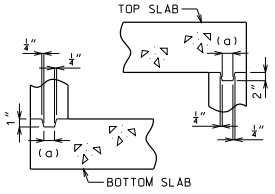

KEYED CONSTRUCTION JOINT

(a) APPROXIMATELY ONE-THIRD OF WALL THICKNESS

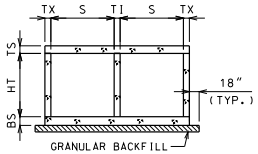

GRANULAR BACKFILL LIMITS AND MEMBER DIMENSIONS

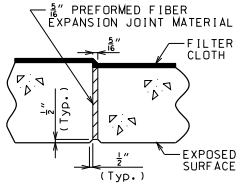

TRANSVERSE JOINT THRU BARREL

PREFORMED FIBER EXPANSION JOINT MATERIAL SHALL BE SECURELY STITCHED TO ONE FACE OF THE CONCRETE WITH NO. 10 GAGE COPPER WIRE OR NO. 12 GAGE SOFT DRAWN GALVANIZED STEEL WIRE.

FILTER CLOTH 3 FEET IN WIDTH AND DOUBLE THICKNESS SHALL BE CENTERED ON TRANSVERSE JOINTS IN TOP SLAB AND SIDEWALLS WITH EDGES SEALED WITH MASTIC OR TWO SIDED TAPE. FILTER CLOTH SHALL BE A SUBSURFACE DRAINAGE GEOTEXTILE IN ACCORDANCE WITH SECTION 1011 OF THE STANDARD SPECIFICATIONS FOR HIGHWAY CONSTRUCTION. COST OF FURNISHING AND INSTALLING FILTER CLOTH WILL BE CONSIDERED COMPLETELY COVERED BY THE CONTRACT UNIT PRICE FOR OTHER ITEMS.

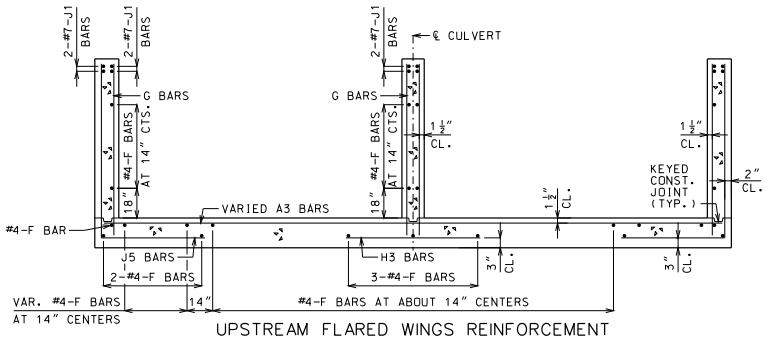

UPSTREAM FLARED WINGS REINFORCEMENT

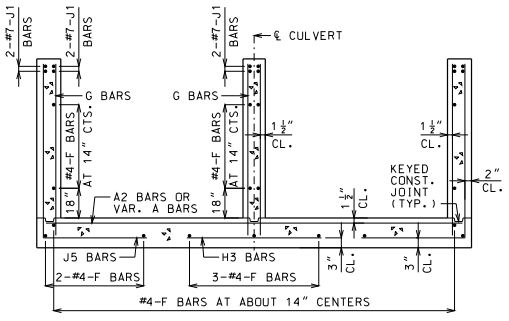

DOWNSTREAM WINGS REINFORCEMENT

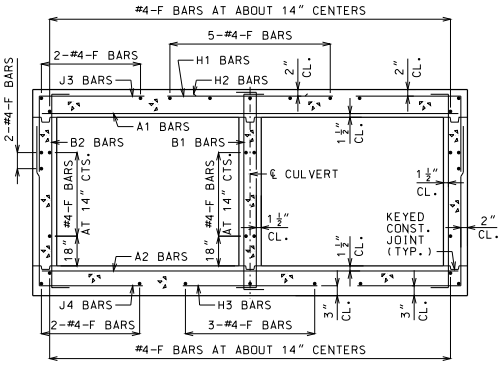

BARREL REINFORCEMENT

FOR DESIGN FILLS OVER 2'-0"

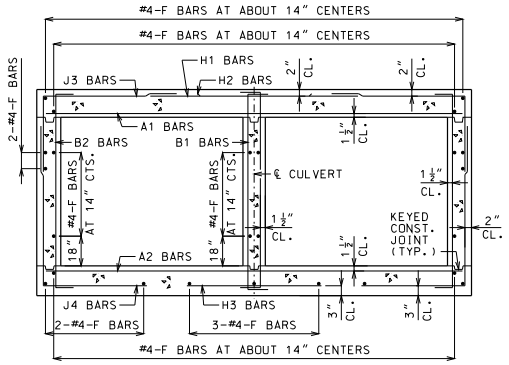

BARREL REINFORCEMENT

FOR DESIGN FILLS 2'-0" OR LESS

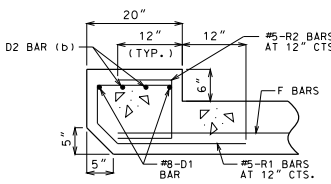

UPSTREAM HEADWALL REINFORCEMENT

NEAR INTERIOR WALL

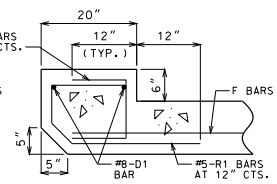

UPSTREAM HEADWALL REINFORCEMENT

NEAR MIDSPAN

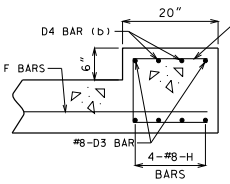

DOWNSTREAM HEADWALL REINFORCEMENT

NEAR INTERIOR WALL

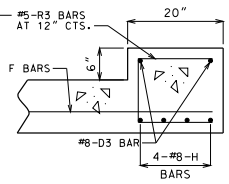

DOWNSTREAM HEADWALL REINFORCEMENT

NEAR MIDSPAN

(b) #8 FOR CLEAR SPAN > 10'-0"
#9 FOR CLEAR SPAN > 13'-0"
NOT REQUIRED FOR CLEAR SPANS ≤ 10'-0"

IF D2 AND D4 BARS ARE REQUIRED, THE MINIMUM LENGTH EACH SIDE OF ℄ WALL SHALL BE THE GREATER OF 48 BAR DIAMETERS OR ¼ CLEAR SPAN. THE CLEAR SPAN IS PARALLEL TO LONG DIRECTION OF HEADWALL.

GENERAL NOTES:

FOR MEMBER THICKNESS AND FOR BAR SIZES, SPACING AND DIMENSIONS OF ALL REINFORCEMENT EXCEPT J5 BARS, SEE 703.47. FOR J5 BARS, SEE 703.37.

BARREL AND WINGS SECTIONS ARE SYMMETRICAL ABOUT AND NORMAL TO ℄ CULVERT. HEADWALL SECTIONS ARE NORMAL TO LONG DIRECTION OF HEADWALL.

DRAWING NOT TO SCALE. FOLLOW DIMENSIONS.

MINIMUM CLEARANCE TO REINFORCING STEEL SHALL BE 1½".

MISSOURI HIGHWAYS AND TRANSPORTATION COMMISSION
105 WEST CAPITOL
JEFFERSON CITY, MO 65102
1-888-ASK-MODOT (1-888-275-6636)

STATE OF MISSOURI
DENNIS W. HECKMAN
NUMBER PE-27141
PROFESSIONAL ENGINEER
THIS SHEET HAS BEEN SIGNED, SEALED AND DATED ELECTRONICALLY.

CONCRETE DOUBLE BOX CULVERT

SKEW: RIGHT ADVANCE
WINGS: FLARED

SECTIONS

DATE EFFECTIVE:	10/01/2011	703.45C	SHEET NO. 3 OF 3
DATE PREPARED:	9/8/2011		

IF A SEAL IS PRESENT ON THIS SHEET IT HAS BEEN ELECTRONICALLY SEALED AND DATED.

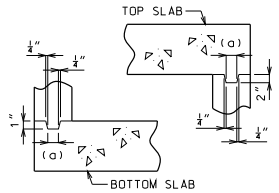

KEYED CONSTRUCTION JOINT

(a) APPROXIMATELY ONE-THIRD OF WALL THICKNESS

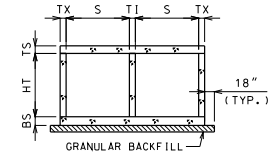

GRANULAR BACKFILL LIMITS AND MEMBER DIMENSIONS

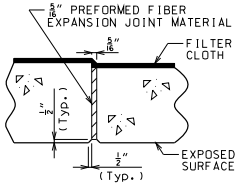

TRANSVERSE JOINT THRU BARREL

PREFORMED FIBER EXPANSION JOINT MATERIAL SHALL BE SECURELY STITCHED TO ONE FACE OF THE CONCRETE WITH NO. 10 GAGE COPPER WIRE OR NO. 12 GAGE SOFT DRAWN GALVANIZED STEEL WIRE.

FILTER CLOTH 3 FEET IN WIDTH AND DOUBLE THICKNESS SHALL BE CENTERED ON TRANSVERSE JOINTS IN TOP SLAB AND SIDEWALLS WITH EDGES SEALED WITH MASTIC OR TWO SIDED TAPE. FILTER CLOTH SHALL BE A SUBSURFACE DRAINAGE GEOTEXTILE IN ACCORDANCE WITH SECTION 1011 OF THE STANDARD SPECIFICATIONS FOR HIGHWAY CONSTRUCTION. COST OF FURNISHING AND INSTALLING FILTER CLOTH WILL BE CONSIDERED COMPLETELY COVERED BY THE CONTRACT UNIT PRICE FOR OTHER ITEMS.

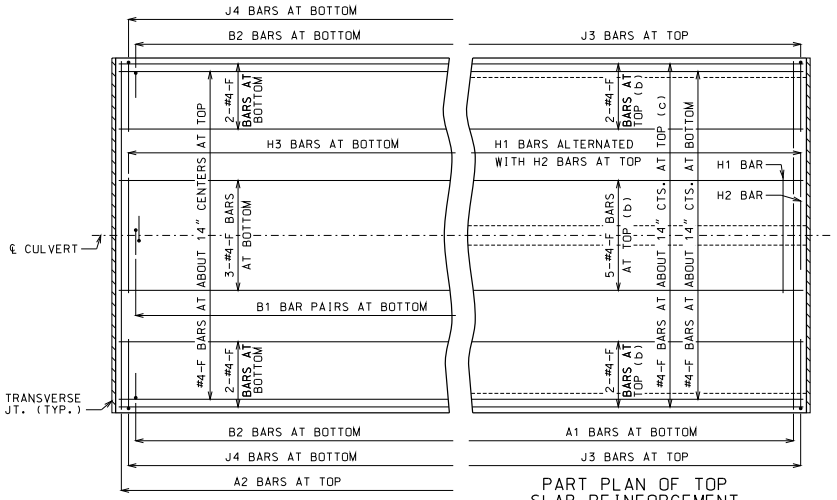

PART PLAN OF BOTTOM SLAB REINFORCEMENT

PART PLAN OF TOP SLAB REINFORCEMENT

(b) FOR DESIGN FILLS OVER 2'-0"
(c) FOR DESIGN FILLS 2'-0" OR LESS

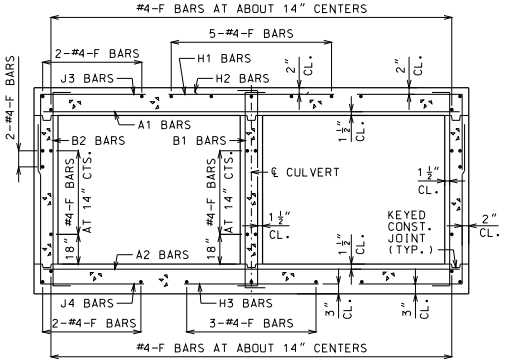

BARREL REINFORCEMENT

FOR DESIGN FILLS OVER 2'-0"
SYMMETRICAL ABOUT AND NORMAL TO ℄ CULVERT.

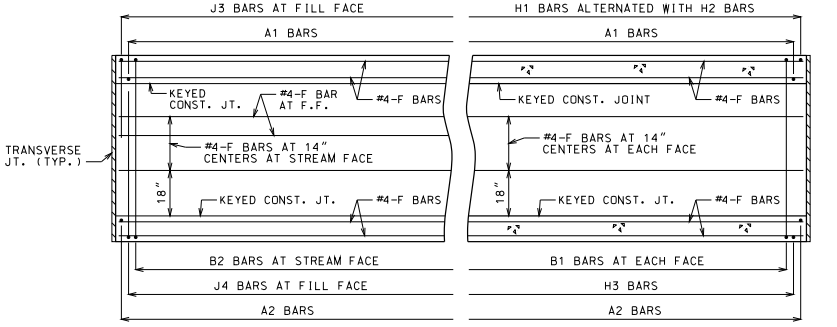

PART ELEVATION OF EXTERIOR WALL REINFORCEMENT

PART SECTION NEAR INTERIOR WALL REINFORCEMENT

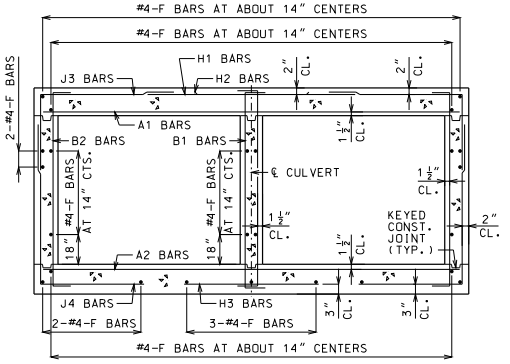

BARREL REINFORCEMENT

FOR DESIGN FILLS 2'-0" OR LESS
SYMMETRICAL ABOUT AND NORMAL TO ℄ CULVERT.

GENERAL NOTES

DESIGN SPECIFICATIONS: 2010 AASHTO LRFD BRIDGE DESIGN SPECFICATIONS AND 2010 INTERIM REVISIONS

DESIGN UNIT STRESSES: CLASS B-1 CONCRETE f'c = 4,000 PSI
REINFORCING STEEL (GRADE 60) fy = 60,000 PSI

DESIGN LOADS: VEHICULAR = HL-93 MINUS LANE LOAD
EARTH = 120 LB/FT³
EQUIVALENT FLUID PRESSURE = 30 LB/FT³ (MIN.) - 60 LB/FT³ (MAX.)

FOR MEMBER THICKNESS AND FOR BAR SIZES, SPACING AND DIMENSIONS, SEE 703.47.

CONSTRUCTION JOINT KEY NOT SHOWN FOR CLARITY IN PART PLANS, PART ELEVATION AND PART SECTION.

DRAWING NOT TO SCALE. FOLLOW DIMENSIONS.

MINIMUM CLEARANCE TO REINFORCING STEEL SHALL BE 1½".

MISSOURI HIGHWAYS AND TRANSPORTATION COMMISSION
105 WEST CAPITOL
JEFFERSON CITY, MO 65102
1-888-ASK-MODOT (1-888-275-6636)

STATE OF MISSOURI
DENNIS W. HECKMAN
NUMBER PE-27141
PROFESSIONAL ENGINEER
THIS SHEET HAS BEEN SIGNED, SEALED AND DATED ELECTRONICALLY.

CONCRETE DOUBLE BOX CULVERT

CUT SECTION

DATE EFFECTIVE: 10/01/2011
DATE PREPARED: 9/8/2011

703.46

SHEET NO. 1 OF 1

IF A SEAL IS PRESENT ON THIS SHEET IT HAS BEEN ELECTRONICALLY SEALED AND DATED.

SPAN (S) = 3 FT HEIGHT (HT) = 2 FT OR 3 FT OR 4 FT

DESIGN FILL	MEMBER THICKNESS				TOP SLAB BARS													BOTTOM SLAB BARS												WALL BARS				
					A1 BARS		J3 BARS					H1 BARS			H2 BARS			A2 BARS		J4 BARS					H3 BARS			B1 BARS		B2 BARS		
										K2												K3									
	TS	BS	TX	TI	SIZE	SPA.	SIZE	SPA.	C1	HT=2′	HT=3′	HT=4′	SIZE	SPA.	C5	SIZE	SPA.	C6	SIZE	SPA.	SIZE	SPA.	C4	HT=2′	HT=3′	HT=4′	SIZE	SPA.	C7	SIZE	SPA.	SIZE	SPA.	G1
1 FT	10	8	8	8	4	8.5	4	10.5	23.8	26.0	26.0	26.0	4	24	39.5	4	24	16.0	4	12	4	12	35.3	28	40	52	4	12	24.5	5	12	5	12	12
2 FT	10	8	8	8	4	9	4	10.5	23.8	26.0	26.0	26.0	4	24	39.5	4	24	16.0	4	12	4	12	33.0	28	40	52	4	12	24.5	5	12	5	12	12
4 FT	8	8	8	8	4	12	4	12	23.8	24.0	24.0	24.0	4	24	39.5	4	24	15.5	4	12	4	12	30.1	28	40	52	4	12	23.5	5	12	5	12	12
6 FT	8	8	8	8	4	12	4	12	30.0	24.0	24.0	24.0	4	24	24.5	4	24	15.0	4	12	4	12	28.0	28	40	52	4	12	23.0	5	12	5	12	12
8 FT	8	8	8	8	4	12	4	12	28.0	24.0	24.0	24.0	4	24	23.5	4	24	15.0	4	12	4	12	27.0	28	40	52	4	12	23.0	5	12	5	12	0
10 FT	8	8	8	8	4	12	4	12	25.0	24.0	24.0	24.0	4	24	22.0	4	24	14.5	4	12	4	12	24.6	28	40	52	4	12	22.5	5	12	5	12	0
12 FT	8	8	8	8	4	12	4	12	24.9	24.0	24.0	24.0	4	24	22.0	4	24	15.5	4	12	4	12	24.5	28	40	52	4	12	22.5	5	12	5	12	0
14 FT	8	8	8	8	4	12	4	12	24.8	24.0	24.0	24.0	4	24	22.0	4	24	16.0	4	12	4	12	24.5	28	40	52	4	11.5	22.5	5	12	5	12	0
16 FT	8	8	8	8	4	12	4	12	24.6	24.0	24.0	24.0	4	24	22.0	4	24	17.0	4	12	4	12	24.4	28	40	52	4	10.5	22.5	5	12	5	12	0
18 FT	8	8	8	8	4	12	4	12	24.6	24.0	24.0	24.0	4	24	22.0	4	24	17.5	4	12	4	12	24.4	28	40	52	4	10	22.5	5	12	5	12	0
20 FT	8	8	8	8	4	12	4	12	24.5	24.0	24.0	24.0	4	24	22.0	4	24	17.5	4	12	4	12	24.3	28	40	52	4	9.5	22.5	5	12	5	12	0
22 FT	8	8	8	8	4	12	4	12	24.5	24.0	24.0	24.0	4	24	22.0	4	24	18.0	4	12	4	12	24.3	28	40	52	4	9	22.5	5	12	5	12	0
24 FT	8	8	8	8	4	12	4	12	24.5	24.0	24.0	24.0	4	24	22.0	4	24	18.0	4	12	4	12	24.3	28	40	52	4	8.5	22.5	5	12	5	12	0
26 FT	8	8	8	8	4	12	4	12	24.5	24.0	24.0	24.0	4	24	22.0	4	24	18.0	4	11	4	11	24.3	28	40	52	4	8	22.5	5	12	5	12	0
28 FT	8	8	8	8	4	12	4	11	24.4	24.0	24.0	24.0	4	23	22.0	4	23	18.0	4	10.5	4	10.5	24.1	28	40	52	4	7.5	22.5	5	12	5	12	0
30 FT	8	8	8	8	4	11.5	4	10.5	24.4	24.0	24.0	24.0	4	22	22.0	4	22	18.0	4	9	4	9.5	24.1	28	40	52	4	7.5	22.5	5	12	5	12	0
32 FT	8	9	8	8	4	11	4	9.5	24.5	24.0	24.0	24.0	4	21	22.0	4	21	18.0	4	10.5	4	12	24.5	29	41	53	4	8	22.5	5	12	5	12	0
34 FT	8	9	8	8	4	10.5	4	9	24.5	24.0	24.0	24.0	4	20	22.0	4	20	18.0	4	9.5	4	11.5	24.4	29	41	53	4	8	22.5	5	12	5	12	0
36 FT	8	9	8	8	4	10	4	8.5	24.4	24.0	24.0	24.0	4	19	22.0	4	19	18.0	4	9	4	11	24.4	29	41	53	4	7.5	22.5	5	12	5	12	0
38 FT	8	10	8	8	4	9.5	4	8	24.5	24.0	24.0	24.0	4	18	22.0	4	18	17.5	4	10	4	12	24.8	30	42	54	4	8.5	22.5	5	12	5	12	0
40 FT	8	10	8	8	4	9	4	7.5	24.5	24.0	24.0	24.0	4	17	22.0	4	17	17.5	4	9.5	4	12	24.8	30	42	54	4	8	22.5	5	12	5	12	0
42 FT	9	10	8	8	4	9	4	9	24.6	25.0	25.0	25.0	4	19	22.0	4	19	17.5	4	9	4	11.5	24.8	30	42	54	4	8	22.5	5	12	5	12	0
44 FT	9	10	8	8	4	9	4	8.5	24.6	25.0	25.0	25.0	4	18	22.0	4	18	17.5	4	8.5	4	11	24.8	30	42	54	4	8	22.5	5	12	5	12	0
46 FT	9	11	8	8	4	8.5	4	8	24.8	25.0	25.0	25.0	4	18	22.0	4	18	17.5	4	9	4	10.5	25.0	31	43	55	4	8.5	22.5	5	12	5	12	0
48 FT	9	11	8	8	4	8	4	7.5	24.8	25.0	25.0	25.0	4	17	22.0	4	17	17.5	4	8.5	4	10.5	25.0	31	43	55	4	8	22.5	5	12	5	12	0
50 FT	10	11	8	8	4	8.5	4	8	24.9	26.0	26.0	26.0	4	19	21.5	4	19	17.5	4	8.5	4	10.5	25.1	31	43	55	4	8	22.5	5	12	5	12	0

SPAN (S) = 3 FT HEIGHT (HT) = 5 FT OR 6 FT

DESIGN FILL	MEMBER THICKNESS				TOP SLAB BARS													BOTTOM SLAB BARS												WALL BARS				
					A1 BARS		J3 BARS					H1 BARS			H2 BARS			A2 BARS		J4 BARS					H3 BARS			B1 BARS		B2 BARS		
										K2												K3									
	TS	BS	TX	TI	SIZE	SPA.	SIZE	SPA.	C1	HT=5′	HT=6′	SIZE	SPA.	C5	SIZE	SPA.	C6	SIZE	SPA.	SIZE	SPA.	C4	HT=5′	HT=6′	SIZE	SPA.	C7	SIZE	SPA.	SIZE	SPA.	G1
1 FT	10	8	8	8	4	8.5	4	10.5	23.8	26.0	26.0	4	24	39.5	4	24	16.0	4	12	4	11.5	39.0	64	76	4	12	24.5	5	12	5	12	12
2 FT	10	8	8	8	4	8.5	4	10.5	23.8	26.0	26.0	4	24	39.5	4	24	16.0	4	12	4	11	39.9	64	76	4	11.5	24.5	5	12	5	12	12
4 FT	8	8	8	8	4	12	4	12	23.8	24.0	24.0	4	24	39.5	4	24	15.0	4	12	4	10	38.6	64	76	4	12	23.5	5	12	5	12	12
6 FT	8	8	8	8	4	12	4	12	36.9	24.0	24.0	4	24	25.0	4	24	14.5	4	12	4	9.5	36.9	64	76	4	12	23.0	5	12	5	12	12
8 FT	8	8	8	8	4	12	4	12	38.6	24.0	24.0	4	24	23.5	4	24	15.0	4	12	4	9	35.8	64	76	4	12	23.0	5	12	5	12	0
10 FT	8	8	8	8	4	12	4	12	33.1	24.0	24.0	4	24	21.5	4	24	14.0	4	12	4	9.5	32.8	64	76	4	12	22.5	5	12	5	12	0
12 FT	8	8	8	8	4	12	4	12	32.8	24.0	24.0	4	24	21.5	4	24	15.0	4	12	4	9	32.5	64	76	4	12	22.5	5	12	5	12	0
14 FT	8	8	8	8	4	12	4	11	32.4	24.0	24.0	4	24	21.5	4	24	16.0	4	12	4	8.5	32.3	64	76	4	12	22.5	5	12	5	12	0
16 FT	8	8	8	8	4	12	4	10	32.1	24.0	24.0	4	24	21.5	4	24	16.5	4	12	4	8	32.1	64	76	4	11.5	22.5	5	12	5	12	0
18 FT	8	8	8	8	4	12	4	9	32.0	24.0	24.0	4	24	21.5	4	24	17.0	4	12	4	7.5	32.0	64	76	4	11	22.5	5	12	5	12	0
20 FT	8	8	8	8	4	12	4	8	31.8	24.0	24.0	4	24	21.5	4	24	17.0	4	12	4	7	31.9	64	76	4	10	22.5	5	12	5	12	0
22 FT	8	8	8	8	4	12	4	7.5	31.6	24.0	24.0	4	24	21.5	4	24	17.5	4	12	4	6.5	31.8	64	76	4	9.5	22.5	5	12	5	12	0
24 FT	8	8	8	8	4	12	4	7	31.6	24.0	24.0	4	24	21.5	4	24	17.5	4	12	4	6	31.6	64	76	4	9.5	22.5	5	12	5	12	0
26 FT	8	8	8	8	4	12	4	6.5	31.5	24.0	24.0	4	24	21.5	4	24	17.5	4	11.5	5	6.5	31.6	64	76	4	9	22.5	5	12	5	12	0
28 FT	8	8	8	8	4	12	4	6	31.5	24.0	24.0	4	24	21.5	4	24	17.5	4	10.5	5	6	31.5	64	76	4	8.5	22.5	5	12	5	12	0
30 FT	8	9	8	8	4	12	5	6.5	31.3	24.0	28.0	4	24	21.5	4	24	17.5	4	11.5	5	6.5	32.8	65	77	4	10	22.5	5	12	5	11.5	0
32 FT	8	9	8	8	4	11	5	6	31.3	24.0	28.0	4	24	21.5	4	24	17.5	4	11	5	6	32.6	65	77	4	9.5	22.5	5	12	5	11	0
34 FT	8	9	8	8	4	10.5	5	6	31.3	24.0	28.0	4	23	21.5	4	23	17.5	4	10	5	6	32.6	65	77	4	9	22.5	5	12	5	10.5	0
36 FT	8	10	8	8	4	10	6	7.5	34.1	24.0	28.0	4	22	21.5	4	22	17.5	4	11	5	6	33.5	66	78	4	10.5	22.5	5	12	5	10	0
38 FT	8	10	8	8	4	9.5	6	7.5	34.1	24.0	28.0	4	21	21.5	4	21	17.5	4	10.5	5	6	33.5	66	78	4	10	22.5	5	12	5	9.5	0
40 FT	9	10	8	8	4	10	5	6	31.9	25.0	29.0	4	24	21.0	4	24	17.5	4	10	6	7	36.4	66	78	4	9.5	22.5	5	12	5	9.5	0
42 FT	9	10	8	8	4	9.5	5	6	31.9	25.0	29.0	4	23	21.0	4	23	17.5	4	9.5	6	7	36.3	66	78	4	9	22.5	5	12	5	9.5	0
44 FT	9	10	8	8	4	9	6	7	34.9	25.0	33.0	4	22	21.0	4	22	17.5	4	9	6	6.5	36.3	66	78	4	8.5	22.5	5	12	5	9.5	0
46 FT	10	11	8	8	4	9.5	5	6	32.8	26.0	30.0	4	24	20.5	4	24	17.0	4	10	6	7	36.9	67	79	4	9.5	22.5	5	12	5	9.5	0
48 FT	10	11	8	8	4	9	6	7	35.8	26.0	34.0	4	24	20.5	4	24	17.5	4	9.5	6	6.5	36.9	67	79	4	9	22.5	5	12	5	9.5	0
50 FT	10	11	8	8	4	8.5	6	7	35.6	26.0	34.0	4	24	20.5	4	24	17.5	4	9	6	6.5	36.9	67	79	4	9	22.5	5	12	5	9.5	0

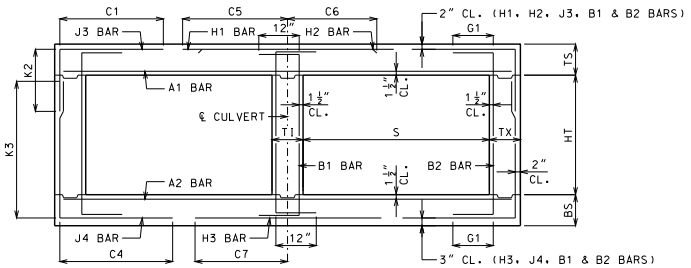

BAR DIMENSIONS DIAGRAM
SYMMETRICAL ABOUT ℄ CULVERT.

GENERAL NOTES:

IF DESIGN FILL IS BETWEEN TABULATED DESIGN FILLS, USE THE NEXT GREATER TABULATED DESIGN FILL, EXCEPT FOR DESIGN FILLS BETWEEN 2 FEET AND 4 FEET. FOR DESIGN FILLS BETWEEN 2 FEET AND 4 FEET USE THE GREATER MEMBER THICKNESS, AREA OF REINFORCEMENT AND BAR DIMENSIONS FROM THE 2 FEET AND 4 FEET TABULATED DESIGN FILLS. AREA OF REINFORCEMENT EQUALS BAR AREA PER FOOT SPACING.

SPECIAL DESIGNS ARE REQUIRED WHEN THE DESIGN FILL IS LESS THAN 1 FOOT OR GREATER THAN 50 FEET.

DIMENSIONS ARE IN INCHES UNLESS OTHERWISE SPECIFIED.

DESIGN FILLS ARE MEASURED FROM THE TOP OF TOP SLAB TO THE TOP OF EARTH FILL OR ROADWAY.

CULVERTS MEET STRENGTH AND SERVICEABILITY REQUIREMENTS FOR THE DESIGN VEHICULAR LIVE LOAD HL-93 MINUS THE LANE LOAD.

MISSOURI HIGHWAYS AND TRANSPORTATION COMMISSION
105 WEST CAPITOL
JEFFERSON CITY, MO 65102
1-888-ASK-MODOT (1-888-275-6636)

STATE OF MISSOURI
DENNIS W. HECKMANN
NUMBER PE-27141
PROFESSIONAL ENGINEER
THIS SHEET HAS BEEN SIGNED, SEALED AND DATED ELECTRONICALLY.

CONCRETE DOUBLE BOX CULVERT

MEMBER THICKNESS
BAR SIZE, SPACING & DIMENSIONS

SPAN (S): 3 FEET
HEIGHT (HT): 2 THRU 6 FEET

DATE EFFECTIVE: 10/01/2011
DATE PREPARED: 9/8/2011

703.47

SHEET NO.
1 OF 27

IF A SEAL IS PRESENT ON THIS SHEET IT HAS BEEN ELECTRONICALLY SEALED AND DATED.

SPAN (S) = 4 FT HEIGHT (HT) = 2 FT OR 3 FT

DESIGN FILL	MEMBER THICKNESS				TOP SLAB BARS												BOTTOM SLAB BARS											WALL BARS				
					A1 BARS		J3 BARS			K2		H1 BARS			H2 BARS		A2 BARS		J4 BARS			K3		H3 BARS			B1 BARS		B2 BARS		
	TS	BS	TX	TI	SIZE	SPA.	SIZE	SPA.	C1	HT=2′	HT=3′	SIZE	SPA.	C5	SIZE	SPA.	C6	SIZE	SPA.	SIZE	SPA.	C4	HT=2′	HT=3′	SIZE	SPA.	C7	SIZE	SPA.	SIZE	SPA.	G1
1 FT	10	8	8	8	4	7	4	10.5	27.3	26.0	26.0	4	23	48.0	4	23	20.5	4	12	4	12	29.3	28	40	4	9.5	28.0	5	12	5	12	12
2 FT	10	8	8	8	4	7	4	10.5	27.3	26.0	26.0	4	23	48.0	4	23	20.0	4	12	4	12	27.3	28	40	4	9	27.5	5	12	5	12	12
4 FT	8	8	8	8	4	12	4	12	26.3	24.0	24.0	4	24	34.0	4	24	19.0	4	12	4	12	25.0	28	40	4	9.5	27.0	5	12	5	12	12
6 FT	8	8	8	8	4	12	4	12	24.8	24.0	24.0	4	24	28.5	4	24	19.0	4	12	4	12	24.0	28	40	4	9.5	26.5	5	12	5	12	12
8 FT	8	8	8	8	4	12	4	12	24.1	24.0	24.0	4	24	27.0	4	24	19.0	4	12	4	12	23.4	28	40	4	9	26.0	5	12	5	12	0
10 FT	8	8	8	8	4	12	4	12	22.6	24.0	24.0	4	24	25.5	4	24	18.5	4	12	4	12	22.1	28	40	4	9	25.5	5	12	5	12	0
12 FT	8	8	8	8	4	12	4	12	22.5	24.0	24.0	4	24	25.5	4	24	18.5	4	12	4	12	22.1	28	40	4	8	25.5	5	12	5	12	0
14 FT	8	8	8	8	4	12	4	12	22.5	24.0	24.0	4	22	25.5	4	22	18.5	4	12	4	12	22.1	28	40	4	7.5	25.5	5	12	5	12	0
16 FT	8	8	8	8	4	12	4	12	22.5	24.0	24.0	4	20	25.5	4	20	18.5	4	11	4	12	22.1	28	40	4	7	25.5	5	12	5	12	0
18 FT	8	8	8	8	4	12	4	12	22.5	24.0	24.0	4	18	25.5	4	18	18.5	4	10	4	11.5	22.0	28	40	4	6.5	25.5	5	12	5	12	0
20 FT	8	8	8	8	4	10.5	4	11.5	22.5	24.0	24.0	4	17	25.5	4	17	18.5	4	9	4	10.5	22.0	28	40	4	6	25.5	5	12	5	12	0
22 FT	8	9	8	8	4	10	4	10.5	22.6	24.0	24.0	4	15	25.5	4	15	18.5	4	9	4	12	21.4	29	41	4	6.5	26.0	5	12	5	12	0
24 FT	8	9	8	8	4	9	4	9.5	22.6	24.0	24.0	4	14	25.5	4	14	18.5	4	8.5	4	12	21.4	29	41	4	6	26.0	5	12	5	12	0
26 FT	8	10	8	8	4	8.5	4	8.5	22.8	24.0	24.0	4	13	25.5	4	13	18.5	4	8.5	4	12	20.9	30	42	4	6.5	26.0	5	12	5	12	0
28 FT	8	10	8	8	4	7.5	4	8	22.8	24.0	24.0	4	12	25.5	4	12	18.5	4	8	4	12	20.9	30	42	4	6.5	26.0	5	12	5	12	0
30 FT	9	10	8	8	4	8	4	10.5	22.3	25.0	25.0	4	13	25.5	4	13	18.5	4	7.5	4	12	21.0	30	42	4	6	26.0	5	12	5	12	0
32 FT	9	11	8	8	4	7.5	4	10	22.4	25.0	25.0	4	12	25.5	4	12	18.5	4	8	4	10.5	20.6	31	43	4	6.5	26.0	5	12	5	12	0
34 FT	10	11	8	8	4	7.5	4	10.5	22.0	26.0	26.0	4	13	25.0	4	13	18.5	4	7.5	4	10.5	20.9	31	43	4	6	26.0	5	12	5	12	0
36 FT	10	12	8	8	4	7.5	4	10	22.1	26.0	26.0	4	12	25.0	4	12	18.5	4	7.5	4	9.5	20.6	32	44	4	6.5	26.0	5	12	5	12	0
38 FT	10	12	8	8	4	7	4	9.5	22.1	26.0	26.0	4	12	25.0	4	12	18.5	4	7.5	4	9.5	20.6	32	44	4	6	26.0	5	12	5	12	0
40 FT	11	12	8	8	4	7	4	9.5	21.8	27.0	27.0	4	13	25.0	4	13	18.5	4	7	4	9.5	20.9	32	44	4	6	26.0	5	12	5	12	0
42 FT	11	13	8	8	4	6.5	4	9.5	21.9	27.0	27.0	4	12	25.0	4	12	18.5	4	7	4	8.5	20.6	33	45	4	6	26.0	5	12	5	12	0
44 FT	11	13	8	8	4	6.5	4	9	21.9	27.0	27.0	4	12	25.0	4	12	18.5	4	7	4	8.5	20.6	33	45	4	6	26.0	5	12	5	12	0
46 FT	12	13	8	8	4	6.5	4	8.5	21.6	28.0	28.0	4	12	24.5	4	12	18.5	4	6.5	4	8.5	20.9	33	45	5	8.5	26.0	5	12	5	12	0
48 FT	12	13	8	8	4	6.5	4	8.5	21.6	28.0	28.0	4	12	24.5	4	12	18.5	4	6	4	8.5	20.9	33	45	5	8.5	26.0	5	12	5	12	0
50 FT	12	14	8	8	4	6	4	8.5	21.8	28.0	28.0	4	12	24.5	4	12	18.5	4	6.5	4	7.5	20.8	34	46	5	9	26.0	5	12	5	12	0

SPAN (S) = 4 FT HEIGHT (HT) = 4 FT OR 5 FT

DESIGN FILL	MEMBER THICKNESS				TOP SLAB BARS												BOTTOM SLAB BARS											WALL BARS				
					A1 BARS		J3 BARS			K2		H1 BARS			H2 BARS		A2 BARS		J4 BARS			K3		H3 BARS			B1 BARS		B2 BARS		
	TS	BS	TX	TI	SIZE	SPA.	SIZE	SPA.	C1	HT=4′	HT=5′	SIZE	SPA.	C5	SIZE	SPA.	C6	SIZE	SPA.	SIZE	SPA.	C4	HT=4′	HT=5′	SIZE	SPA.	C7	SIZE	SPA.	SIZE	SPA.	G1
1 FT	10	8	8	8	4	7	4	10.5	27.3	26.0	26.0	4	23	48.0	4	23	20.5	4	12	4	12	39.9	52	64	4	9	28.0	5	12	5	12	12
2 FT	10	8	8	8	4	7	4	10.5	27.3	26.0	26.0	4	23	48.0	4	23	20.5	4	12	4	12	36.8	52	64	4	9	27.5	5	12	5	12	12
4 FT	8	8	8	8	4	12	4	12	27.3	24.0	24.0	4	24	48.0	4	24	19.5	4	12	4	12	33.8	52	64	4	9	27.0	5	12	5	12	12
6 FT	8	8	8	8	4	12	4	12	33.5	24.0	24.0	4	24	28.5	4	24	19.0	4	12	4	11.5	31.3	52	64	4	9	26.5	5	12	5	12	12
8 FT	8	8	8	8	4	12	4	12	30.6	24.0	24.0	4	24	27.0	4	24	19.0	4	12	4	11	29.9	52	64	4	8.5	26.0	5	12	5	12	0
10 FT	8	8	8	8	4	12	4	12	27.4	24.0	24.0	4	24	25.5	4	24	18.5	4	12	4	12	27.1	52	64	4	9	25.5	5	12	5	12	0
12 FT	8	8	8	8	4	12	4	12	27.1	24.0	24.0	4	24	25.5	4	24	18.5	4	12	4	11	26.9	52	64	4	8	25.5	5	12	5	12	0
14 FT	8	8	8	8	4	12	4	12	27.0	24.0	24.0	4	22	25.0	4	22	18.5	4	12	4	10.5	26.8	52	64	4	7.5	25.5	5	12	5	12	0
16 FT	8	8	8	8	4	12	4	11	26.9	24.0	24.0	4	21	25.0	4	21	18.5	4	10.5	4	10	26.6	52	64	4	7	25.5	5	12	5	12	0
18 FT	8	8	8	8	4	11.5	4	10	26.8	24.0	24.0	4	19	25.0	4	19	18.5	4	9.5	4	9	26.6	52	64	4	6.5	25.5	5	12	5	12	0
20 FT	8	8	8	8	4	10.5	4	9	26.6	24.0	24.0	4	17	25.0	4	17	18.5	4	8.5	4	8	26.5	52	64	4	6	25.5	5	12	5	12	0
22 FT	8	9	8	8	4	9.5	4	8	26.8	24.0	24.0	4	15	25.0	4	15	18.5	4	9	4	9.5	26.8	53	65	4	6.5	26.0	5	12	5	12	0
24 FT	8	9	8	8	4	9	4	7.5	26.6	24.0	24.0	4	14	25.0	4	14	18.5	4	8.5	4	9	26.6	53	65	4	6.5	26.0	5	12	5	12	0
26 FT	8	10	8	8	4	8.5	4	6.5	26.6	24.0	24.0	4	13	25.0	4	13	18.5	4	8.5	4	10.5	26.9	54	66	4	7	26.0	5	12	5	12	0
28 FT	8	10	8	8	4	7.5	4	6	26.6	24.0	24.0	4	12	25.0	4	12	18.5	4	8	4	10	26.9	54	66	4	6.5	26.0	5	12	5	12	0
30 FT	9	10	8	8	4	8	4	7.5	26.8	25.0	25.0	4	13	25.0	4	13	18.5	4	7	4	9	26.9	54	66	4	6	26.0	5	12	5	12	0
32 FT	9	11	8	8	4	7.5	4	6.5	26.9	25.0	25.0	4	12	25.0	4	12	18.5	4	8	4	9	27.1	55	67	4	6.5	26.0	5	12	5	12	0
34 FT	10	11	8	8	4	7.5	4	6.5	27.0	26.0	26.0	4	14	24.5	4	14	18.5	4	7.5	4	8.5	27.1	55	67	4	6	26.0	5	12	5	12	0
36 FT	10	12	8	8	4	7.5	4	6.5	27.1	26.0	26.0	4	13	24.5	4	13	18.5	4	8	4	8.5	27.4	56	68	4	6.5	26.0	5	12	5	12	0
38 FT	10	12	8	8	4	7	4	6	27.1	26.0	26.0	4	12	24.5	4	12	18.5	4	7.5	4	8	27.4	56	68	4	6	26.0	5	12	5	12	0
40 FT	11	12	8	8	4	7	4	6	27.3	27.0	27.0	4	14	24.5	4	14	18.5	4	7	4	7.5	27.5	56	68	4	6	26.0	5	12	5	12	0
42 FT	11	13	8	8	4	7	5	9	27.3	27.0	27.0	4	13	24.5	4	13	18.5	4	7.5	4	7.5	27.8	57	69	4	6	26.0	5	12	5	12	0
44 FT	11	13	8	8	4	6.5	5	8.5	27.3	27.0	27.0	4	12	24.5	4	12	18.5	4	7	4	7.5	27.6	57	69	4	6	26.0	5	12	5	12	0
46 FT	11	13	8	8	4	6	5	8.5	27.3	27.0	27.0	4	12	24.5	4	12	18.5	4	6.5	4	7	27.6	57	69	5	9	26.0	5	12	5	12	0
48 FT	12	13	8	8	4	6.5	5	8.5	27.4	28.0	28.0	4	13	24.0	4	13	18.5	4	6.5	4	6.5	27.8	57	69	5	8.5	26.0	5	12	5	11.5	0
50 FT	12	14	8	8	4	6	5	8.5	27.5	28.0	28.0	4	13	23.5	4	13	18.0	4	7	4	6.5	28.0	58	70	4	6	25.5	5	12	5	11	0

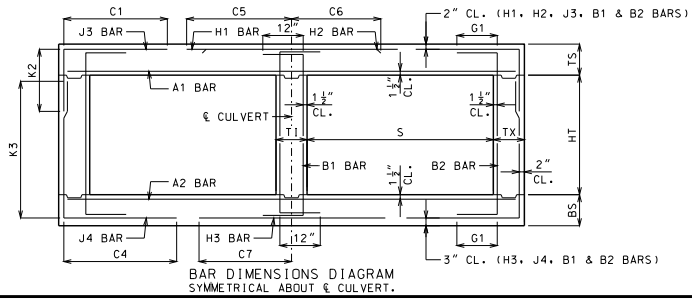

BAR DIMENSIONS DIAGRAM
SYMMETRICAL ABOUT ℄ CULVERT.

GENERAL NOTES:

IF DESIGN FILL IS BETWEEN TABULATED DESIGN FILLS, USE THE NEXT GREATER TABULATED DESIGN FILL, EXCEPT FOR DESIGN FILLS BETWEEN 2 FEET AND 4 FEET. FOR DESIGN FILLS BETWEEN 2 FEET AND 4 FEET USE THE GREATER MEMBER THICKNESS, AREA OF REINFORCEMENT AND BAR DIMENSIONS FROM THE 2 FEET AND 4 FEET TABULATED DESIGN FILLS. AREA OF REINFORCEMENT EQUALS BAR AREA PER FOOT SPACING.

SPECIAL DESIGNS ARE REQUIRED WHEN THE DESIGN FILL IS LESS THAN 1 FOOT OR GREATER THAN 50 FEET.

DIMENSIONS ARE IN INCHES UNLESS OTHERWISE SPECIFIED.

DESIGN FILLS ARE MEASURED FROM THE TOP OF TOP SLAB TO THE TOP OF EARTH FILL OR ROADWAY.

CULVERTS MEET STRENGTH AND SERVICEABILITY REQUIREMENTS FOR THE DESIGN VEHICULAR LIVE LOAD HL-93 MINUS THE LANE LOAD.

MISSOURI HIGHWAYS AND TRANSPORTATION COMMISSION
105 WEST CAPITOL
JEFFERSON CITY, MO 65102
1-888-ASK-MODOT (1-888-275-6636)

STATE OF MISSOURI
DENNIS W. HECKMANN
NUMBER PE-27141
PROFESSIONAL ENGINEER
THIS SHEET HAS BEEN SIGNED, SEALED AND DATED ELECTRONICALLY.

CONCRETE DOUBLE BOX CULVERT

MEMBER THICKNESS
BAR SIZE, SPACING & DIMENSIONS

SPAN (S): 4 FEET
HEIGHT (HT): 2 THRU 5 FEET

DATE EFFECTIVE: 10/01/2011
DATE PREPARED: 9/8/2011

703.47

SHEET NO.
2 OF 27

IF A SEAL IS PRESENT ON THIS SHEET IT HAS BEEN ELECTRONICALLY SEALED AND DATED.

SPAN (S) = 4 FT HEIGHT (HT) = 6 FT OR 7 FT

DESIGN FILL	MEMBER THICKNESS				TOP SLAB BARS							H1 BARS			H2 BARS			BOTTOM SLAB BARS								H3 BARS			WALL BARS				
					A1 BARS		J3 BARS			K2								A2 BARS		J4 BARS			K3						B1 BARS		B2 BARS		
	TS	BS	TX	TI	SIZE	SPA.	SIZE	SPA.	C1	HT=6′	HT=7′	SIZE	SPA.	C5	SIZE	SPA.	C6	SIZE	SPA.	SIZE	SPA.	C4	HT=6′	HT=7′	SIZE	SPA.	C7	SIZE	SPA.	SIZE	SPA.	G1
1 FT	10	8	8	8	4	6.5	4	10.5	27.3	26.0	26.0	4	24	48.0	4	24	20.5	4	12	4	8.5	46.6	76	88	4	8.5	28.0	5	12	5	12	12
2 FT	10	8	8	8	4	6.5	4	10.5	27.3	26.0	26.0	4	23	48.0	4	23	20.5	4	12	4	8.5	45.3	76	88	4	8.5	27.5	5	12	5	12	12
4 FT	8	8	8	8	4	12	4	10.5	27.3	24.0	24.0	4	24	48.0	4	24	19.5	4	12	4	7.5	43.0	76	88	4	9	27.0	5	12	5	12	12
6 FT	8	8	8	8	4	12	4	10	47.3	24.0	24.0	4	24	28.5	4	24	19.0	4	12	4	7	40.8	76	88	4	9	26.5	5	12	5	12	12
8 FT	8	8	8	8	4	12	4	9	41.4	24.0	24.0	4	24	27.0	4	24	19.0	4	12	4	6.5	39.0	76	88	4	8.5	26.0	5	12	5	12	0
10 FT	8	8	8	8	4	12	4	10	35.4	24.0	24.0	4	24	25.0	4	24	18.5	4	12	4	7	35.1	76	88	4	8.5	25.5	5	12	5	12	0
12 FT	8	8	8	8	4	12	4	8.5	34.9	24.0	24.0	4	24	25.0	4	24	18.5	4	12	4	6.5	34.9	76	88	4	8	25.5	5	12	5	12	0
14 FT	8	8	8	8	4	12	4	7.5	34.6	24.0	24.0	4	23	25.0	4	23	18.5	4	12	4	6	34.6	76	88	4	7.5	25.5	5	12	5	12	0
16 FT	8	8	8	8	4	12	4	6.5	34.4	24.0	24.0	4	22	25.0	4	22	18.5	4	10.5	5	6.5	34.4	76	88	4	7	25.5	5	12	5	12	0
18 FT	8	8	8	8	4	12	4	6	34.1	24.0	24.0	4	19	25.0	4	19	18.5	4	9.5	5	6	34.3	76	88	4	6.5	25.5	5	12	5	12	0
20 FT	8	9	9	8	4	11	4	6.5	33.6	24.0	24.0	4	18	24.5	4	18	18.5	4	10	4	6.5	34.9	77	89	4	7.5	25.5	5	12	5	12	0
22 FT	8	9	9	8	4	10	4	6	33.5	24.0	24.0	4	16	25.0	4	16	18.5	4	9	4	6	34.8	77	89	4	7	25.5	5	12	5	12	0
24 FT	8	9	9	8	4	9	5	6.5	33.4	24.0	28.0	4	15	25.0	4	15	18.5	4	8.5	5	7	34.6	77	89	4	6.5	25.5	5	12	5	12	0
26 FT	8	10	9	8	4	8.5	5	6	33.1	24.0	24.0	4	14	24.5	4	14	18.5	4	9	4	6	35.5	78	90	4	7	26.0	5	12	5	11.5	0
28 FT	8	10	9	8	4	8	6	7.5	36.1	24.0	28.0	4	13	24.5	4	13	18.5	4	8.5	5	7	35.5	78	90	4	6.5	26.0	5	12	5	10.5	0
30 FT	9	10	9	8	4	8	5	6	34.0	25.0	29.0	4	14	24.5	4	14	18.5	4	7.5	5	6.5	35.3	78	90	4	6	25.5	5	12	5	10	0
32 FT	9	11	9	8	4	8	5	6	33.9	25.0	29.0	4	13	24.5	4	13	18.5	4	8	5	6.5	35.9	79	91	4	6.5	26.0	5	12	5	9.5	0
34 FT	9	11	9	8	4	7.5	5	6	33.9	25.0	29.0	4	13	24.5	4	13	18.5	4	7.5	5	6.5	35.9	79	91	4	6	26.0	5	12	5	9	0
36 FT	10	11	9	8	4	7.5	5	6.5	34.6	26.0	30.0	4	14	24.0	4	14	18.0	4	7	5	6	35.8	79	91	4	6	25.5	5	12	5	8.5	0
38 FT	10	12	9	8	4	7	5	6	34.5	26.0	30.0	4	14	24.0	4	14	18.0	4	7.5	5	6	36.3	80	92	4	6	25.5	5	12	5	8.5	0
40 FT	10	12	9	8	4	7	5	6	34.5	26.0	30.0	4	13	24.0	4	13	18.0	4	7.5	5	6	36.3	80	92	4	6	25.5	5	12	5	8.5	0
42 FT	11	12	9	8	4	7	5	6	35.1	31.0	31.0	4	14	23.5	4	14	18.0	4	6.5	6	7.5	39.1	80	92	5	9	25.5	5	12	5	8.5	0
44 FT	11	13	10	8	4	6.5	5	7	35.1	27.0	31.0	4	14	23.0	4	14	18.0	4	7.5	5	7.5	36.8	81	93	4	6	25.5	5	12	5	8	0
46 FT	11	13	10	8	4	6.5	5	6.5	35.0	27.0	31.0	4	13	23.0	4	13	18.0	4	7	5	7	36.8	81	93	5	9	26.0	5	12	5	8	0
48 FT	11	13	10	8	4	6	5	6	35.0	27.0	31.0	4	13	23.0	4	13	18.0	4	6.5	5	6.5	36.8	81	93	5	8.5	25.5	5	12	5	8	0
50 FT	12	14	11	8	4	6.5	5	7	35.6	28.0	32.0	4	15	23.0	4	15	18.0	4	7	5	7.5	37.3	82	94	5	9	26.0	5	12	5	8	0

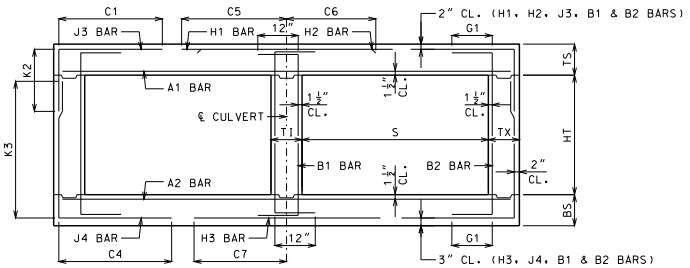

BAR DIMENSIONS DIAGRAM
SYMMETRICAL ABOUT ℄ CULVERT.

GENERAL NOTES:

IF DESIGN FILL IS BETWEEN TABULATED DESIGN FILLS, USE THE NEXT GREATER TABULATED DESIGN FILL, EXCEPT FOR DESIGN FILLS BETWEEN 2 FEET AND 4 FEET. FOR DESIGN FILLS BETWEEN 2 FEET AND 4 FEET USE THE GREATER MEMBER THICKNESS, AREA OF REINFORCEMENT AND BAR DIMENSIONS FROM THE 2 FEET AND 4 FEET TABULATED DESIGN FILLS. AREA OF REINFORCEMENT EQUALS BAR AREA PER FOOT SPACING.

SPECIAL DESIGNS ARE REQUIRED WHEN THE DESIGN FILL IS LESS THAN 1 FOOT OR GREATER THAN 50 FEET.

DIMENSIONS ARE IN INCHES UNLESS OTHERWISE SPECIFIED.

DESIGN FILLS ARE MEASURED FROM THE TOP OF TOP SLAB TO THE TOP OF EARTH FILL OR ROADWAY.

CULVERTS MEET STRENGTH AND SERVICEABILITY REQUIREMENTS FOR THE DESIGN VEHICULAR LIVE LOAD HL-93 MINUS THE LANE LOAD.

MISSOURI HIGHWAYS AND TRANSPORTATION COMMISSION
105 WEST CAPITOL
JEFFERSON CITY, MO 65102
1-888-ASK-MODOT (1-888-275-6636)

STATE OF MISSOURI
DENNIS W. HECKMANN
NUMBER PE-27141
PROFESSIONAL ENGINEER
THIS SHEET HAS BEEN SIGNED, SEALED AND DATED ELECTRONICALLY.

CONCRETE DOUBLE BOX CULVERT

MEMBER THICKNESS
BAR SIZE, SPACING & DIMENSIONS

SPAN (S): 4 FEET
HEIGHT (HT): 6 THRU 7 FEET

DATE EFFECTIVE: 10/01/2011
DATE PREPARED: 9/8/2011

703.47

SHEET NO.
3 OF 27

IF A SEAL IS PRESENT ON THIS SHEET IT HAS BEEN ELECTRONICALLY SEALED AND DATED.

SPAN (S) = 5 FT HEIGHT (HT) = 3 FT OR 4 FT

DESIGN FILL	MEMBER THICKNESS				TOP SLAB BARS												BOTTOM SLAB BARS										WALL BARS				
					A1 BARS		J3 BARS					H1 BARS			H2 BARS			A2 BARS		J4 BARS					H3 BARS			B1 BARS		B2 BARS		
										K2											K3										
	TS	BS	TX	TI	SIZE	SPA.	SIZE	SPA.	C1	HT=3′	HT=4′	SIZE	SPA.	C5	SIZE	SPA.	C6	SIZE	SPA.	SIZE	SPA.	C4	HT=3′	HT=4′	SIZE	SPA.	C7	SIZE	SPA.	SIZE	SPA.	G1
1 FT	11	8	8	8	4	6.5	4	9.5	30.9	27.0	27.0	4	20	56.0	4	20	21.5	4	12	4	12	33.3	40	52	4	7.5	31.0	5	12	5	12	12
2 FT	11	8	8	8	4	6.5	4	9.5	30.9	27.0	27.0	4	19	56.0	4	19	21.5	4	11.5	4	11.5	31.0	40	52	4	7	31.0	5	12	5	12	12
4 FT	8	8	8	8	4	11	4	12	30.0	24.0	24.0	4	18	39.0	4	18	20.0	4	12	4	12	28.4	40	52	4	7	30.0	5	12	5	12	12
6 FT	8	8	8	8	4	12	4	12	27.4	24.0	24.0	4	19	32.0	4	19	20.0	4	11.5	4	12	26.9	40	52	4	7	29.5	5	12	5	12	12
8 FT	8	8	8	8	4	12	4	12	26.6	24.0	24.0	4	18	30.5	4	18	19.5	4	10.5	4	11.5	26.0	40	52	4	6.5	29.0	5	12	5	12	0
10 FT	8	8	8	8	4	11	4	12	26.1	24.0	24.0	4	16	29.5	4	16	19.5	4	9.5	4	10.5	25.5	40	52	4	6	29.0	5	12	5	12	0
12 FT	8	8	8	8	4	12	4	12	24.6	24.0	24.0	4	16	28.5	4	16	19.0	4	9.5	4	11	24.4	40	52	5	7.5	28.5	5	12	5	12	0
14 FT	8	8	8	8	4	10	4	11	24.6	24.0	24.0	4	14	28.5	4	14	19.0	4	8.5	4	10	24.3	40	52	5	7	28.5	5	12	5	12	0
16 FT	8	9	8	8	4	9	4	9.5	24.8	24.0	24.0	4	12	28.5	4	12	19.0	4	8.5	4	12	23.5	41	53	5	7.5	29.0	5	12	5	12	0
18 FT	8	9	8	8	4	8	4	8.5	24.8	24.0	24.0	5	17	28.5	5	17	19.5	4	7.5	4	11.5	23.5	41	53	5	7	29.0	5	12	5	12	0
20 FT	8	10	8	8	4	7.5	4	7.5	24.9	24.0	24.0	5	17	28.0	5	17	20.0	4	7.5	4	12	22.9	42	54	5	7.5	29.0	5	12	5	12	0
22 FT	9	10	8	8	4	7	4	9	24.3	25.0	25.0	5	16	28.5	5	16	19.0	4	7	4	12	23.1	42	54	5	7	29.0	5	12	5	12	0
24 FT	9	11	8	8	4	6.5	4	8	24.5	25.0	25.0	5	16	28.5	5	16	20.0	4	7	4	10.5	22.8	43	55	5	7.5	29.0	5	12	5	12	0
26 FT	10	11	8	8	4	6.5	4	8.5	24.0	26.0	26.0	5	16	28.5	5	16	19.0	4	6.5	4	10.5	23.0	43	55	5	7	29.0	5	12	5	12	0
28 FT	10	12	8	8	4	6.5	4	8	24.1	26.0	26.0	5	15	28.0	5	15	19.5	4	6.5	4	9.5	22.6	44	56	5	7.5	29.0	5	12	5	12	0
30 FT	11	12	8	8	4	6.5	4	8.5	23.8	27.0	27.0	5	15	28.0	5	15	19.0	4	6	4	9.5	22.9	44	56	5	7	29.0	5	12	5	12	0
32 FT	11	13	8	8	4	6	4	7.5	23.9	27.0	27.0	5	15	28.0	5	15	19.0	4	6.5	4	8.5	22.8	45	57	5	7.5	29.0	5	12	5	12	0
34 FT	12	13	8	8	4	6	4	8.5	23.6	28.0	28.0	5	15	28.0	5	15	19.0	4	6	4	8.5	22.9	45	57	5	7	29.0	5	12	5	12	0
36 FT	12	14	8	8	5	9	4	7.5	23.8	28.0	28.0	5	15	28.0	5	15	19.0	4	6	4	7.5	22.8	46	58	5	7.5	29.0	5	12	5	12	0
38 FT	13	14	8	8	5	9	4	7.5	23.5	29.0	29.0	5	15	27.5	5	15	19.0	4	6	4	7.5	23.0	46	58	5	7	29.0	5	12	5	12	0
40 FT	13	15	8	8	5	8.5	4	7.5	23.8	29.0	29.0	5	15	27.5	5	15	19.0	4	6	4	7	22.9	47	59	5	7.5	29.0	5	12	5	12	0
42 FT	13	15	8	8	5	8	4	7	23.8	29.0	29.0	5	14	27.5	5	14	19.0	5	9	4	7	22.9	47	59	5	7	29.0	5	12	5	12	0
44 FT	14	15	8	8	5	8.5	4	7	23.5	30.0	30.0	5	15	27.0	5	15	19.0	5	8.5	4	7	23.1	47	59	5	6.5	29.0	5	12	5	12	0
46 FT	14	16	8	8	5	8	4	7	23.6	30.0	30.0	5	14	27.0	5	14	19.0	5	9	4	6.5	23.1	48	60	5	7	29.0	5	12	5	12	0
48 FT	14	16	8	8	5	7.5	4	6.5	23.6	30.0	30.0	5	14	27.0	5	14	19.0	5	8.5	4	6.5	23.1	48	60	5	6.5	29.0	5	12	5	12	0
50 FT	15	16	8	8	5	7.5	4	6.5	25.6	31.0	31.0	5	15	31.5	5	15	24.0	5	8	4	6.5	23.3	48	60	5	6.5	29.0	5	12	5	12	0

SPAN (S) = 5 FT HEIGHT (HT) = 5 FT OR 6 FT

DESIGN FILL	MEMBER THICKNESS				TOP SLAB BARS												BOTTOM SLAB BARS										WALL BARS				
					A1 BARS		J3 BARS					H1 BARS			H2 BARS			A2 BARS		J4 BARS					H3 BARS			B1 BARS		B2 BARS		
										K2											K3										
	TS	BS	TX	TI	SIZE	SPA.	SIZE	SPA.	C1	HT=5′	HT=6′	SIZE	SPA.	C5	SIZE	SPA.	C6	SIZE	SPA.	SIZE	SPA.	C4	HT=5′	HT=6′	SIZE	SPA.	C7	SIZE	SPA.	SIZE	SPA.	G1
1 FT	11	8	8	8	4	6	4	9.5	30.9	27.0	27.0	4	20	56.0	4	20	22.0	4	11.5	4	9.5	44.1	64	76	4	7	31.0	5	12	5	12	12
2 FT	11	8	8	8	4	6	4	9.5	30.9	27.0	27.0	4	19	56.0	4	19	21.5	4	10.5	4	9	40.6	64	76	4	7	31.0	5	12	5	12	12
4 FT	8	8	8	8	4	10.5	4	10.5	30.9	24.0	24.0	4	18	56.0	4	18	20.0	4	11.5	4	9	37.6	64	76	4	7	30.0	5	12	5	12	12
6 FT	8	8	8	8	4	12	4	10.5	37.1	24.0	24.0	4	19	32.0	4	19	20.0	4	11	4	8.5	34.6	64	76	4	6.5	29.5	5	12	5	12	12
8 FT	8	8	8	8	4	12	4	10	33.8	24.0	24.0	4	18	30.5	4	18	19.5	4	10	4	8	33.0	64	76	4	6	29.0	5	12	5	12	0
10 FT	8	8	8	8	4	11	4	9	32.3	24.0	24.0	4	16	29.5	4	16	19.5	4	9	4	7.5	31.9	64	76	5	7.5	29.0	5	12	5	12	0
12 FT	8	8	8	8	4	11.5	4	9.5	29.5	24.0	24.0	4	16	28.5	4	16	19.0	4	9	4	7.5	29.4	64	76	5	7.5	28.5	5	12	5	12	0
14 FT	8	8	8	8	4	10	4	8	29.3	24.0	24.0	4	14	28.5	4	14	19.0	4	8	4	7	29.1	64	76	5	7	28.5	5	12	5	12	0
16 FT	8	9	8	8	4	9	4	7	29.3	24.0	24.0	4	12	28.0	4	12	19.0	4	8	4	8	29.3	65	77	5	7.5	29.0	5	12	5	12	0
18 FT	8	9	8	8	4	8	4	6.5	29.1	24.0	24.0	5	17	28.0	5	17	19.5	4	7	4	7.5	29.1	65	77	5	7	29.0	5	12	5	12	0
20 FT	8	10	8	8	4	7	5	7	29.0	24.0	24.0	5	17	28.0	5	17	20.0	4	7.5	4	8.5	29.3	66	78	5	7.5	29.0	5	12	5	12	0
22 FT	9	10	8	8	4	7	4	6.5	29.1	25.0	25.0	5	16	28.0	5	16	19.0	4	7	4	7.5	29.3	66	78	5	7	29.0	5	12	5	12	0
24 FT	9	11	8	8	4	6.5	4	6	29.1	25.0	25.0	5	16	28.0	5	16	19.5	4	7	4	7.5	29.5	67	79	5	7.5	29.0	5	12	5	12	0
26 FT	10	11	8	8	4	6.5	5	8	29.3	26.0	26.0	5	16	28.0	5	16	19.0	4	6.5	4	6.5	29.5	67	79	5	7.5	29.0	5	12	5	12	0
28 FT	10	12	8	8	4	6.5	5	7.5	29.3	26.0	26.0	5	15	28.0	5	15	19.0	4	6.5	4	6.5	29.6	68	80	5	7.5	29.0	5	12	5	12	0
30 FT	11	12	8	8	4	6.5	5	8.5	29.4	27.0	27.0	5	16	27.5	5	16	19.0	4	6.5	4	6	29.8	68	80	5	7.5	29.0	5	12	5	12	0
32 FT	11	13	8	8	4	6	5	8	29.5	27.0	27.0	5	15	27.5	5	15	19.0	4	6.5	4	6	29.9	69	81	5	7.5	29.0	5	12	5	12	0
34 FT	12	13	8	8	4	6	5	8.5	29.5	28.0	32.0	5	16	27.5	5	16	19.0	4	6	5	8.5	30.0	69	81	5	7	29.0	5	12	5	11.5	0
36 FT	12	14	8	8	5	9	5	7.5	29.6	28.0	32.0	5	15	27.0	5	15	19.0	4	6.5	5	9	30.1	70	82	5	7.5	29.0	5	12	5	10.5	0
38 FT	12	14	8	8	5	8.5	5	7.5	29.6	28.0	32.0	5	15	27.0	5	15	19.0	4	6	5	8.5	30.1	70	82	5	7	29.0	5	12	5	10	0
40 FT	13	14	8	8	5	8.5	5	7.5	29.6	29.0	33.0	5	16	27.0	5	16	19.0	5	8.5	5	8	30.3	70	82	5	7	29.0	5	12	5	9.5	0
42 FT	13	15	8	8	5	8.5	5	7	29.8	29.0	33.0	5	15	26.5	5	15	19.0	4	6	5	8	30.4	71	83	5	7	28.5	5	12	5	9.5	0
44 FT	13	15	8	8	5	8	5	6.5	29.8	29.0	33.0	5	14	26.5	5	14	19.0	5	9	5	8	30.4	71	83	5	7	28.5	5	12	5	9.5	0
46 FT	14	16	9	8	5	8	5	8	30.5	30.0	34.0	5	16	26.0	5	16	19.0	5	9	5	9	31.0	72	84	5	7	29.0	5	12	5	9.5	0
48 FT	14	16	9	8	5	8	5	8	30.4	30.0	34.0	5	15	26.0	5	15	19.0	5	8.5	5	8.5	31.0	72	84	5	6.5	29.0	5	12	5	9	0
50 FT	14	16	10	8	5	7.5	5	7.5	31.0	30.0	30.0	5	15	26.0	5	15	19.0	5	8	4	6	31.1	72	84	5	6.5	29.0	5	12	5	10	0

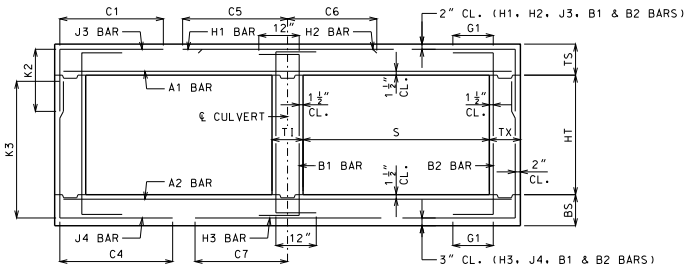

BAR DIMENSIONS DIAGRAM
SYMMETRICAL ABOUT ℄ CULVERT.

GENERAL NOTES:

IF DESIGN FILL IS BETWEEN TABULATED DESIGN FILLS, USE THE NEXT GREATER TABULATED DESIGN FILL, EXCEPT FOR DESIGN FILLS BETWEEN 2 FEET AND 4 FEET. FOR DESIGN FILLS BETWEEN 2 FEET AND 4 FEET USE THE GREATER MEMBER THICKNESS, AREA OF REINFORCEMENT AND BAR DIMENSIONS FROM THE 2 FEET AND 4 FEET TABULATED DESIGN FILLS. AREA OF REINFORCEMENT EQUALS BAR AREA PER FOOT SPACING.

SPECIAL DESIGNS ARE REQUIRED WHEN THE DESIGN FILL IS LESS THAN 1 FOOT OR GREATER THAN 50 FEET.

DIMENSIONS ARE IN INCHES UNLESS OTHERWISE SPECIFIED.

DESIGN FILLS ARE MEASURED FROM THE TOP OF TOP SLAB TO THE TOP OF EARTH FILL OR ROADWAY.

CULVERTS MEET STRENGTH AND SERVICEABILITY REQUIREMENTS FOR THE DESIGN VEHICULAR LIVE LOAD HL-93 MINUS THE LANE LOAD.

MISSOURI HIGHWAYS AND TRANSPORTATION COMMISSION
105 WEST CAPITOL
JEFFERSON CITY, MO 65102
1-888-ASK-MODOT (1-888-275-6636)

STATE OF MISSOURI
DENNIS W. HECKMAN
NUMBER PE-27141
PROFESSIONAL ENGINEER
THIS SHEET HAS BEEN SIGNED, SEALED AND DATED ELECTRONICALLY.

CONCRETE DOUBLE BOX CULVERT

MEMBER THICKNESS
BAR SIZE, SPACING & DIMENSIONS

SPAN (S): 5 FEET
HEIGHT (HT): 3 THRU 6 FEET

DATE EFFECTIVE: 10/01/2011
DATE PREPARED: 9/8/2011

703.47

SHEET NO.
4 OF 27

IF A SEAL IS PRESENT ON THIS SHEET IT HAS BEEN ELECTRONICALLY SEALED AND DATED.

SPAN (S) = 5 FT HEIGHT (HT) = 7 FT OR 8 FT

DESIGN FILL	MEMBER THICKNESS				TOP SLAB BARS							H1 BARS			H2 BARS			BOTTOM SLAB BARS								H3 BARS			WALL BARS				
					A1 BARS		J3 BARS			K2								A2 BARS		J4 BARS			K3						B1 BARS		B2 BARS		
	TS	BS	TX	TI	SIZE	SPA.	SIZE	SPA.	C1	HT=7′	HT=8′	SIZE	SPA.	C5	SIZE	SPA.	C6	SIZE	SPA.	SIZE	SPA.	C4	HT=7′	HT=8′	SIZE	SPA.	C7	SIZE	SPA.	SIZE	SPA.	G1
1 FT	11	8	8	8	4	6	4	9.5	30.9	27.0	27.0	4	20	56.0	4	20	22.0	4	10.5	4	7	52.1	88	100	4	7	31.0	5	12	5	12	12
2 FT	11	8	8	8	4	6	4	9	30.9	27.0	27.0	4	20	56.0	4	20	22.0	4	10	4	6.5	50.0	88	100	4	6.5	31.0	5	12	5	12	12
4 FT	8	8	8	8	4	10	4	7	30.9	24.0	24.0	4	18	56.0	4	18	20.5	4	10.5	4	6	47.4	88	100	4	6.5	30.0	5	12	5	12	12
6 FT	8	9	8	8	4	12	4	7	51.6	24.0	24.0	4	19	32.5	4	19	20.0	4	12	4	6.5	46.3	89	101	4	7.5	29.5	5	12	5	12	12
8 FT	8	9	8	8	4	12	4	6.5	44.5	24.0	24.0	4	18	30.5	4	18	19.5	4	11	4	6	44.0	89	101	4	7	29.5	5	12	5	12	0
10 FT	8	9	9	8	4	11.5	4	7	40.8	24.0	24.0	4	16	29.5	4	16	19.5	4	10	4	6.5	41.4	89	101	4	6.5	29.0	5	12	5	12	0
12 FT	8	9	9	8	4	12	4	7	36.9	24.0	24.0	4	17	28.0	4	17	19.0	4	10.5	4	7	38.3	89	101	4	6.5	29.0	5	12	5	12	0
14 FT	8	9	9	8	4	10.5	4	6.5	36.4	24.0	24.0	4	15	28.0	4	15	19.0	4	9	4	6.5	37.9	89	101	4	6	29.0	5	12	5	12	0
16 FT	8	9	9	8	4	9	5	7	36.0	24.0	28.0	4	13	28.0	4	13	19.0	4	8	5	7	37.5	89	101	5	7.5	28.5	5	12	5	12	0
18 FT	8	9	9	8	4	8	5	6	35.8	24.0	28.0	5	18	28.0	5	18	19.0	4	7.5	5	6	37.3	89	101	5	7	28.5	5	12	5	12	0
20 FT	8	10	9	8	4	7.5	6	7	38.4	24.0	28.0	5	17	28.0	5	17	19.5	4	7.5	5	6.5	38.1	90	102	5	7.5	29.0	5	12	5	11	0
22 FT	9	10	9	8	4	7.5	5	6	36.4	25.0	29.0	5	17	27.5	5	17	19.0	4	7	5	6	37.8	90	102	5	7.5	29.0	5	12	5	10	0
24 FT	9	11	9	8	4	7	5	6	36.1	25.0	29.0	5	16	27.5	5	16	19.0	4	7	5	6	38.5	91	103	5	8	29.0	5	12	5	9.5	0
26 FT	10	11	9	8	4	7	5	6	36.9	26.0	30.0	5	17	27.5	5	17	19.0	4	6.5	5	6	38.3	91	103	5	7.5	29.0	5	12	5	9	0
28 FT	10	12	9	8	4	6.5	5	6	36.8	30.0	30.0	5	16	27.5	5	16	19.0	4	7	5	6	38.9	92	104	5	8	29.0	5	12	5	8.5	0
30 FT	11	12	9	8	4	6.5	5	6	37.4	31.0	31.0	5	17	27.0	5	17	19.0	4	6.5	6	7.5	41.6	92	104	5	7.5	29.0	5	12	5	8.5	0
32 FT	11	13	9	8	4	6.5	6	7	40.3	31.0	31.0	5	16	27.0	5	16	19.0	4	6.5	5	6	39.1	93	105	5	7.5	29.0	5	12	5	8.5	0
34 FT	11	13	9	8	4	6	6	7	40.1	31.0	35.0	5	15	27.0	5	15	19.0	4	6.5	6	7	42.1	93	105	5	7.5	29.0	5	12	5	8.5	0
36 FT	12	14	10	8	4	6	5	6.5	37.8	32.0	32.0	5	17	26.0	5	17	19.0	4	6.5	5	7	39.5	94	106	5	7.5	29.0	5	12	5	8	0
38 FT	12	14	10	8	5	9	5	6	37.6	32.0	32.0	5	16	26.0	5	16	19.0	4	6	5	6.5	39.5	94	106	5	7	29.0	5	12	5	8	0
40 FT	12	15	11	8	5	8.5	5	7	37.8	28.0	32.0	5	15	26.0	5	15	19.0	4	6	5	7	40.0	95	107	5	7.5	29.0	5	12	5	7.5	0
42 FT	13	15	11	8	5	8.5	5	7	38.3	33.0	33.0	5	17	25.5	5	17	18.5	4	6	5	7	39.9	95	107	5	7	29.0	5	12	5	7.5	0
44 FT	13	15	11	8	5	8.5	5	6.5	38.1	33.0	33.0	5	16	25.5	5	16	18.5	5	9	5	7	39.9	95	107	5	6.5	29.0	5	12	5	7.5	0
46 FT	13	16	12	8	5	8	5	6.5	38.3	29.0	33.0	5	16	25.5	5	16	18.5	4	6	5	7	40.4	96	108	5	7	29.0	5	12	5	7.5	0
48 FT	14	16	12	8	5	8	5	6.5	38.8	34.0	34.0	5	17	25.0	5	17	18.5	5	9	5	6.5	40.4	96	108	5	6.5	29.0	5	12	5	7	0
50 FT	14	16	12	8	5	7.5	5	6.5	38.8	34.0	34.0	5	17	25.0	5	17	18.5	5	8.5	5	6.5	40.3	96	108	5	6.5	29.0	5	12	5	7	0

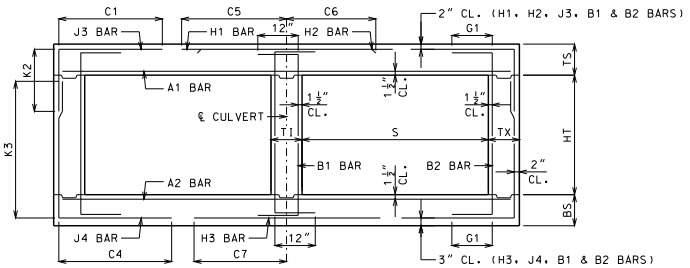

BAR DIMENSIONS DIAGRAM
SYMMETRICAL ABOUT ℄ CULVERT.

GENERAL NOTES:

IF DESIGN FILL IS BETWEEN TABULATED DESIGN FILLS, USE THE NEXT GREATER TABULATED DESIGN FILL, EXCEPT FOR DESIGN FILLS BETWEEN 2 FEET AND 4 FEET. FOR DESIGN FILLS BETWEEN 2 FEET AND 4 FEET USE THE GREATER MEMBER THICKNESS, AREA OF REINFORCEMENT AND BAR DIMENSIONS FROM THE 2 FEET AND 4 FEET TABULATED DESIGN FILLS. AREA OF REINFORCEMENT EQUALS BAR AREA PER FOOT SPACING.

SPECIAL DESIGNS ARE REQUIRED WHEN THE DESIGN FILL IS LESS THAN 1 FOOT OR GREATER THAN 50 FEET.

DIMENSIONS ARE IN INCHES UNLESS OTHERWISE SPECIFIED.

DESIGN FILLS ARE MEASURED FROM THE TOP OF TOP SLAB TO THE TOP OF EARTH FILL OR ROADWAY.

CULVERTS MEET STRENGTH AND SERVICEABILITY REQUIREMENTS FOR THE DESIGN VEHICULAR LIVE LOAD HL-93 MINUS THE LANE LOAD.

MISSOURI HIGHWAYS AND TRANSPORTATION COMMISSION
105 WEST CAPITOL
JEFFERSON CITY, MO 65102
1-888-ASK-MODOT (1-888-275-6636)

STATE OF MISSOURI
DENNIS W. HECKMANN
NUMBER PE-27141
PROFESSIONAL ENGINEER
THIS SHEET HAS BEEN SIGNED, SEALED AND DATED ELECTRONICALLY.

CONCRETE DOUBLE BOX CULVERT

MEMBER THICKNESS
BAR SIZE, SPACING & DIMENSIONS

SPAN (S): 5 FEET
HEIGHT (HT): 7 THRU 8 FEET

DATE EFFECTIVE: 10/01/2011
DATE PREPARED: 9/8/2011

703.47

SHEET NO.
5 OF 27

IF A SEAL IS PRESENT ON THIS SHEET IT HAS BEEN ELECTRONICALLY SEALED AND DATED.

SPAN (S) = 6 FT HEIGHT (HT) = 3 FT OR 4 FT OR 5 FT

DESIGN FILL	MEMBER THICKNESS				TOP SLAB BARS													BOTTOM SLAB BARS												WALL BARS				
					A1 BARS		J3 BARS			K2			H1 BARS			H2 BARS			A2 BARS		J4 BARS			K3			H3 BARS			B1 BARS		B2 BARS		
	TS	BS	TX	TI	SIZE	SPA.	SIZE	SPA.	C1	HT=3′	HT=4′	HT=5′	SIZE	SPA.	C5	SIZE	SPA.	C6	SIZE	SPA.	SIZE	SPA.	C4	HT=3′	HT=4′	HT=5′	SIZE	SPA.	C7	SIZE	SPA.	SIZE	SPA.	G1
1 FT	11	8	8	8	5	8.5	4	9.5	34.5	27.0	27.0	27.0	4	16	64.5	4	16	23.0	4	9.5	4	9.5	37.6	40	52	64	4	6	34.5	5	12	5	12	12
2 FT	11	8	8	8	5	8.5	4	9.5	34.5	27.0	27.0	27.0	4	15	64.5	4	15	22.5	4	9	4	9	35.0	40	52	64	5	7.5	34.0	5	12	5	12	12
4 FT	8	8	8	8	4	8	4	9	34.0	24.0	24.0	24.0	4	13	43.5	4	13	21.0	4	9	4	9.5	32.0	40	52	64	5	7.5	33.5	5	12	5	12	12
6 FT	8	8	8	8	4	9.5	4	9.5	30.4	24.0	24.0	24.0	4	13	35.5	4	13	20.5	4	8.5	4	9	29.9	40	52	64	5	7	32.5	5	12	5	12	12
8 FT	8	8	8	8	4	9	4	9	29.3	24.0	24.0	24.0	4	12	34.0	4	12	20.5	4	7.5	4	8	28.9	40	52	64	5	6.5	32.0	5	12	5	12	0
10 FT	8	9	8	8	4	8	4	8	28.8	24.0	24.0	24.0	5	17	33.0	5	17	20.5	4	7.5	4	10	27.8	41	53	65	5	7	32.0	5	12	5	12	0
12 FT	8	9	8	8	4	7	4	7	28.4	24.0	24.0	24.0	5	16	32.5	5	16	21.5	4	6.5	4	9	27.3	41	53	65	5	6.5	32.0	5	12	5	12	0
14 FT	8	9	8	8	4	7.5	4	7	27.0	24.0	24.0	24.0	5	16	31.5	5	16	21.5	4	6.6	4	9.5	25.9	41	53	65	5	6	32.0	5	12	5	12	0
16 FT	8	10	8	8	4	6.5	4	6	27.1	24.0	24.0	24.0	5	15	31.5	5	15	22.5	4	6.5	4	11.5	25.3	42	54	66	5	6.5	32.0	5	12	5	12	0
18 FT	9	11	8	8	4	6.5	4	7.5	26.6	25.0	25.0	25.0	5	16	31.5	5	16	21.5	4	6.5	4	10.5	25.0	43	55	67	5	7	32.0	5	12	5	12	0
20 FT	10	11	8	8	4	6	4	7.5	26.1	26.0	26.0	26.0	5	15	31.5	5	15	21.0	4	6	4	10	25.3	43	55	67	5	6.5	32.0	5	12	5	12	0
22 FT	10	12	8	8	5	9	4	6.5	26.3	26.0	26.0	26.0	5	15	31.5	5	15	21.5	4	6	4	9.5	24.9	44	56	68	5	6.5	32.0	5	12	5	12	0
24 FT	11	12	8	8	5	9	4	7	25.9	27.0	27.0	27.0	5	14	31.5	5	14	21.0	5	8.5	4	9	25.1	44	56	68	5	6	32.0	5	12	5	12	0
26 FT	11	13	8	8	5	8.5	4	6	26.0	27.0	27.0	27.0	5	14	31.5	5	14	21.5	5	8.5	4	8.5	24.9	45	57	69	5	6	32.0	5	12	5	12	0
28 FT	12	14	8	8	5	8.5	4	6.5	25.9	28.0	28.0	28.0	5	13	31.5	5	13	20.5	5	9	4	7.5	25.0	46	58	70	5	6.5	32.0	5	12	5	12	0
30 FT	13	14	8	8	5	8.5	4	6.5	25.6	29.0	29.0	29.0	5	12	31.0	5	12	20.0	5	8.5	4	7.5	25.1	46	58	70	5	6	32.0	5	12	5	12	0
32 FT	13	15	8	8	5	8	4	6	25.8	29.0	29.0	29.0	5	12	31.0	5	12	20.5	5	8.5	4	7	25.1	47	59	71	5	6	32.0	5	12	5	12	0
34 FT	14	15	8	8	5	8	4	6	25.5	30.0	30.0	30.0	5	12	31.0	5	12	20.0	5	8	4	7	25.3	47	59	71	6	8.5	35.0	5	12	5	12	0
36 FT	14	16	8	8	5	7.5	5	8.5	25.8	30.0	30.0	30.0	5	12	31.0	5	12	20.0	5	8	4	6.5	25.3	48	60	72	5	6	32.0	5	12	5	12	0
38 FT	15	16	8	8	5	7.5	4	6	27.5	31.0	31.0	31.0	5	12	35.5	5	12	25.0	5	7.5	4	6.5	25.4	48	60	72	6	8	35.0	5	12	5	12	0
40 FT	15	17	8	8	5	7	5	8	30.8	31.0	31.0	31.0	6	17	39.5	6	17	29.0	5	7.5	4	6	25.4	49	61	73	6	8.5	35.0	5	12	5	12	0
42 FT	16	17	8	8	5	7	5	7	30.6	32.0	32.0	32.0	5	12	35.0	5	12	25.0	5	7.5	4	6	25.6	49	61	73	6	8	35.0	5	12	5	12	0
44 FT	16	18	8	8	5	6.5	5	7	30.8	32.0	32.0	36.0	6	17	39.0	6	17	29.0	5	7.5	5	6.5	25.6	50	62	74	6	8	35.0	5	12	5	12	0
46 FT	16	18	8	8	5	6	5	7	30.8	32.0	32.0	36.0	6	16	39.0	6	16	29.0	5	7	5	6.5	25.6	50	62	74	6	8	35.0	5	12	5	11.5	0
48 FT	17	19	8	8	5	6.5	5	6.5	30.8	37.0	37.0	37.0	5	12	34.5	5	12	24.5	5	7.5	5	6.5	25.9	51	63	75	6	8	35.0	5	12	5	10.5	0
50 FT	17	19	8	8	5	6	5	6.5	30.8	37.0	37.0	37.0	6	16	38.5	6	16	28.5	5	7	5	6.5	25.9	51	63	75	6	7.5	35.0	5	12	5	10	0

SPAN (S) = 6 FT HEIGHT (HT) = 6 FT OR 7 FT

DESIGN FILL	MEMBER THICKNESS				TOP SLAB BARS													BOTTOM SLAB BARS												WALL BARS				
					A1 BARS		J3 BARS			K2			H1 BARS			H2 BARS			A2 BARS		J4 BARS			K3			H3 BARS			B1 BARS		B2 BARS		
	TS	BS	TX	TI	SIZE	SPA.	SIZE	SPA.	C1	HT=6′	HT=7′		SIZE	SPA.	C5	SIZE	SPA.	C6	SIZE	SPA.	SIZE	SPA.	C4	HT=6′	HT=7′		SIZE	SPA.	C7	SIZE	SPA.	SIZE	SPA.	G1
1 FT	11	8	8	8	5	8	4	9.5	34.5	27.0	27.0		4	16	64.5	4	16	23.5	4	9	4	7.5	48.9	76	88		5	7.5	34.5	5	12	5	12	12
2 FT	11	8	8	8	5	8	4	9.5	34.5	27.0	27.0		4	15	64.5	4	15	23.0	4	8.5	4	7	45.0	76	88		5	7.5	34.0	5	12	5	12	12
4 FT	8	8	8	8	4	7.5	4	7.5	34.5	24.0	24.0		4	13	64.5	4	13	21.0	4	8.5	4	7	41.6	76	88		5	7	33.5	5	12	5	12	12
6 FT	8	8	8	8	4	9	4	7.5	40.9	24.0	24.0		4	13	36.0	4	13	20.5	4	8	4	6.5	38.1	76	88		5	7	32.5	5	12	5	12	12
8 FT	8	8	8	8	4	9	4	7	37.0	24.0	24.0		4	12	34.0	4	12	20.5	4	7.5	4	6	36.3	76	88		5	6.5	32.0	5	12	5	12	0
10 FT	8	9	8	8	4	8	4	6	35.1	24.0	24.0		5	17	33.0	5	17	21.0	4	7.5	4	6.5	35.5	77	89		5	7	32.0	5	12	5	12	0
12 FT	8	9	8	8	4	7	5	6.5	34.1	24.0	24.0		5	16	32.5	5	16	21.5	4	6.5	4	6	34.5	77	89		5	6.5	32.0	5	12	5	12	0
14 FT	8	9	8	8	4	7	5	6.5	31.8	24.0	24.0		5	16	31.5	5	16	21.5	4	6.5	4	6	32.0	77	89		5	6	32.0	5	12	5	12	0
16 FT	8	10	8	8	4	6.5	5	6	31.6	24.0	24.0		5	15	31.0	5	15	22.5	4	6.5	4	7	32.0	78	90		5	6.5	32.0	5	12	5	12	0
18 FT	9	11	8	8	4	6.5	5	6.5	31.8	25.0	25.0		5	16	31.0	5	16	21.5	4	6.5	4	6.5	32.3	79	91		5	7	32.0	5	12	5	12	0
20 FT	10	11	8	8	4	6	5	7.5	31.8	26.0	30.0		5	15	31.0	5	15	21.0	4	6	5	7.5	32.1	79	91		5	6.5	32.0	5	12	5	12	0
22 FT	10	12	8	8	5	9	5	7	31.6	26.0	30.0		5	15	31.0	5	15	21.5	4	6	5	8	32.3	80	92		5	6.5	32.0	5	12	5	12	0
24 FT	11	12	8	8	5	9	5	7.5	31.8	27.0	31.0		5	14	31.0	5	14	20.5	5	8.5	5	7.5	32.1	80	92		5	6	32.0	5	12	5	12	0
26 FT	11	13	8	8	5	8.5	5	6.5	31.8	27.0	31.0		5	14	31.0	5	14	21.0	5	9	5	7.5	32.3	81	93		5	6	32.0	5	12	5	11	0
28 FT	12	14	8	8	5	8.5	5	7	31.9	28.0	32.0		5	13	30.5	5	13	20.0	5	9	5	8	32.6	82	94		5	6.5	32.0	5	12	5	10	0
30 FT	12	14	8	8	5	7.5	5	6.5	31.8	28.0	32.0		5	13	30.5	5	13	20.5	5	8.5	5	7.5	32.5	82	94		5	6	32.0	5	12	5	9.5	0
32 FT	13	15	8	8	5	8	5	6.5	32.0	29.0	33.0		5	12	30.0	5	12	20.0	5	8.5	5	7.5	32.8	83	95		5	6	32.0	5	12	5	9.5	0
34 FT	13	15	8	8	5	7	5	6	31.9	29.0	33.0		5	12	30.0	5	12	20.0	5	8	5	7	32.8	83	95		5	6	32.0	5	12	5	9.5	0
36 FT	14	16	9	8	5	7.5	5	7.5	32.6	30.0	34.0		5	12	29.5	5	12	19.5	5	8	5	8	33.3	84	96		5	6	32.0	5	12	5	9	0
38 FT	14	16	9	8	5	7	5	7	32.5	30.0	34.0		5	12	29.5	5	12	19.5	5	8	5	8	33.1	84	96		6	8	35.0	5	12	5	8.5	0
40 FT	15	17	9	8	5	7	5	6.5	37.8	31.0	35.0		5	13	34.0	5	13	24.5	5	8	5	8	33.5	85	97		6	8.5	35.0	5	12	5	8.5	0
42 FT	15	17	10	8	5	7	5	7.5	38.3	31.0	35.0		5	12	34.0	5	12	24.5	5	7.5	5	7.5	33.6	85	97		6	8	35.0	5	12	5	9	0
44 FT	15	18	10	8	5	6	5	7	38.4	31.0	35.0		5	12	34.0	5	12	24.5	5	7.5	5	7.5	33.9	86	98		6	8	35.0	5	12	5	8.5	0
46 FT	16	18	10	8	5	6.5	5	6.5	38.4	32.0	36.0		5	12	33.0	5	12	24.5	5	7.5	5	7.5	34.0	86	98		6	7.5	35.0	5	12	5	8	0
48 FT	16	19	11	8	5	6.5	5	7	39.0	32.0	36.0		5	12	33.0	5	12	24.5	5	7.5	5	8.5	34.4	87	99		6	8	35.0	5	12	5	8.5	0
50 FT	17	19	11	8	5	6.5	5	7	39.1	33.0	37.0		5	13	32.5	5	13	24.5	5	7	5	8	34.5	87	99		6	7.5	35.0	5	12	5	8	0

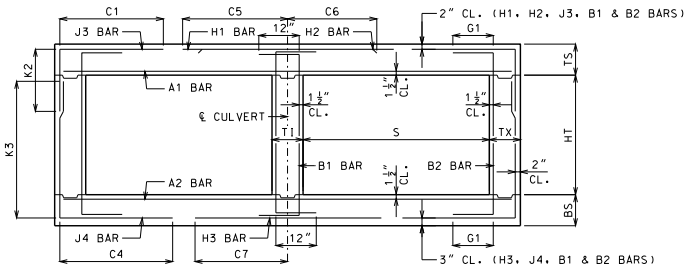

BAR DIMENSIONS DIAGRAM
SYMMETRICAL ABOUT ℄ CULVERT.

GENERAL NOTES:

IF DESIGN FILL IS BETWEEN TABULATED DESIGN FILLS, USE THE NEXT GREATER TABULATED DESIGN FILL, EXCEPT FOR DESIGN FILLS BETWEEN 2 FEET AND 4 FEET. FOR DESIGN FILLS BETWEEN 2 FEET AND 4 FEET USE THE GREATER MEMBER THICKNESS, AREA OF REINFORCEMENT AND BAR DIMENSIONS FROM THE 2 FEET AND 4 FEET TABULATED DESIGN FILLS. AREA OF REINFORCEMENT EQUALS BAR AREA PER FOOT SPACING.

SPECIAL DESIGNS ARE REQUIRED WHEN THE DESIGN FILL IS LESS THAN 1 FOOT OR GREATER THAN 50 FEET.

DIMENSIONS ARE IN INCHES UNLESS OTHERWISE SPECIFIED.

DESIGN FILLS ARE MEASURED FROM THE TOP OF TOP SLAB TO THE TOP OF EARTH FILL OR ROADWAY.

CULVERTS MEET STRENGTH AND SERVICEABILITY REQUIREMENTS FOR THE DESIGN VEHICULAR LIVE LOAD HL-93 MINUS THE LANE LOAD.

MISSOURI HIGHWAYS AND TRANSPORTATION COMMISSION
105 WEST CAPITOL
JEFFERSON CITY, MO 65102
1-888-ASK-MODOT (1-888-275-6636)

STATE OF MISSOURI
DENNIS W. HECKMAN
NUMBER PE-27141
PROFESSIONAL ENGINEER
THIS SHEET HAS BEEN SIGNED, SEALED AND DATED ELECTRONICALLY.

CONCRETE DOUBLE BOX CULVERT

MEMBER THICKNESS
BAR SIZE, SPACING & DIMENSIONS

SPAN (S): 6 FEET
HEIGHT (HT): 3 THRU 7 FEET

DATE EFFECTIVE: 10/01/2011
DATE PREPARED: 9/8/2011

703.47

SHEET NO.
6 OF 27

IF A SEAL IS PRESENT ON THIS SHEET IT HAS BEEN ELECTRONICALLY SEALED AND DATED.

SPAN (S) = 6 FT HEIGHT (HT) = 8 FT OR 9 FT																															
DESIGN FILL	MEMBER THICKNESS				TOP SLAB BARS													BOTTOM SLAB BARS										WALL BARS				
					A1 BARS		J3 BARS					H1 BARS			H2 BARS			A2 BARS		J4 BARS					H3 BARS			B1 BARS		B2 BARS		
										K2												K3									
	TS	BS	TX	TI	SIZE	SPA.	SIZE	SPA.	C1	HT=8′	HT=9′	SIZE	SPA.	C5	SIZE	SPA.	C6	SIZE	SPA.	SIZE	SPA.	C4	HT=8′	HT=9′	SIZE	SPA.	C7	SIZE	SPA.	SIZE	SPA.	G1
1 FT	11	9	8	8	5	8	4	7	34.5	27.0	27.0	4	16	64.5	4	16	23.5	4	9.5	4	6.5	59.4	101	113	4	6.5	34.5	5	12	5	12	12
2 FT	11	9	8	8	5	8	4	6.5	34.5	27.0	27.0	4	16	64.5	4	16	23.0	4	9	4	6	57.0	101	113	4	6	34.0	5	12	5	12	12
4 FT	8	9	9	8	4	7.5	4	6.5	35.1	24.0	24.0	4	13	65.0	4	13	21.0	4	9.5	4	6.5	53.0	101	113	4	6	33.5	5	12	5	12	12
6 FT	8	9	9	8	4	9	4	6	53.1	24.0	24.0	4	13	36.0	4	13	20.5	4	9	4	6	49.5	101	113	4	6	33.0	5	12	5	12	12
8 FT	8	9	9	8	4	9	5	7	46.5	24.0	28.0	4	12	33.5	4	12	20.5	4	8	5	6.5	46.5	101	113	5	7.5	32.5	5	12	5	12	0
10 FT	8	9	9	8	4	8	5	6	43.8	24.0	28.0	5	17	32.5	5	17	20.5	4	7.5	5	6	44.6	101	113	5	6.5	32.0	5	12	5	11.5	0
12 FT	8	9	10	8	4	7.5	5	6.5	41.8	24.0	28.0	5	17	32.0	5	17	21.5	4	6.5	5	6.5	42.9	101	113	5	6.5	32.0	5	12	5	11.5	0
14 FT	8	9	10	8	4	7.5	5	6.5	38.5	24.0	28.0	5	17	31.0	5	17	21.0	4	6.5	5	6.5	39.6	101	113	5	6	31.5	5	12	5	12	0
16 FT	8	10	10	8	4	6.5	5	6	38.1	24.0	28.0	5	16	31.0	5	16	22.0	4	6.5	5	7	40.6	102	114	5	6.5	32.0	5	12	5	11.5	0
18 FT	9	11	10	8	4	6.5	5	6	38.8	25.0	29.0	5	16	31.0	5	16	21.0	4	6.5	5	7	41.1	103	115	5	7	32.0	5	12	5	10.5	0
20 FT	9	11	10	8	4	6	5	6	38.5	25.0	29.0	5	16	31.0	5	16	22.0	4	6	5	6.5	40.9	103	115	5	6	32.0	5	12	5	10	0
22 FT	10	12	10	8	4	6	5	6.5	39.1	30.0	30.0	5	15	30.5	5	15	21.0	4	6	5	6.5	41.4	104	116	5	6.5	32.0	5	12	5	9	0
24 FT	11	13	10	8	4	6	5	6.5	39.6	31.0	31.0	5	14	30.5	5	14	20.0	4	6	5	6.5	41.8	105	117	5	6.5	32.0	5	12	5	8.5	0
26 FT	11	13	10	8	5	9	5	6	39.4	31.0	31.0	5	14	30.5	5	14	20.5	5	9	5	6.5	41.6	105	117	5	6	32.0	5	12	5	8	0
28 FT	12	14	10	8	5	9	5	6	40.0	32.0	32.0	5	13	30.0	5	13	19.5	4	6	5	6.5	42.0	106	118	5	6.5	32.0	5	12	5	8	0
30 FT	12	14	10	8	5	8	5	6	39.9	32.0	32.0	5	13	30.0	5	13	20.0	5	8.5	5	6	41.9	106	118	5	6	32.0	5	12	5	8	0
32 FT	13	15	11	8	5	8.5	5	7	40.4	33.0	33.0	5	13	29.0	5	13	19.5	5	8.5	5	7	42.3	107	119	5	6	32.0	5	12	5	7.5	0
34 FT	13	15	11	8	5	8	5	6.5	40.3	33.0	33.0	5	13	29.0	5	13	19.5	5	8	5	7	42.1	107	119	6	8	35.0	5	12	5	7.5	0
36 FT	14	16	11	8	5	8	5	6	40.8	34.0	34.0	5	14	28.5	5	14	19.5	5	8.5	5	7	42.6	108	120	5	6	32.0	5	12	5	7.5	0
38 FT	14	16	12	8	5	7.5	5	6.5	40.8	34.0	34.0	5	13	28.5	5	13	19.5	5	7.5	5	6.5	42.5	108	120	6	8	35.0	5	12	5	7	0
40 FT	14	17	12	8	5	7	5	6	40.8	34.0	34.0	5	12	28.5	5	12	19.5	5	8	5	6.5	43.0	109	121	6	8	35.0	5	12	5	7	0
42 FT	15	17	13	8	5	7	5	6	46.4	35.0	35.0	5	13	33.0	5	13	24.5	5	7	5	6	42.8	109	121	6	7.5	35.0	5	12	5	7	0
44 FT	15	18	13	8	5	7	5	6	46.4	35.0	35.0	5	13	33.0	5	13	24.5	5	7.5	5	6	43.3	110	122	6	8	35.0	5	12	5	6.5	0
46 FT	15	18	13	8	5	6	5	6	46.3	35.0	35.0	5	12	33.0	5	12	24.5	5	7.5	5	6	43.3	110	122	6	7.5	35.0	5	12	5	6.5	0
48 FT	16	19	14	8	5	6.5	5	6	47.0	36.0	36.0	5	14	32.5	5	14	24.0	5	7.5	5	6	43.8	111	123	6	7.5	35.0	5	12	5	6.5	0
50 FT	16	19	14	8	5	6	5	6	46.9	36.0	36.0	5	13	32.5	5	13	24.0	5	7	5	6	43.6	111	123	6	7.5	35.0	5	12	5	6.5	0

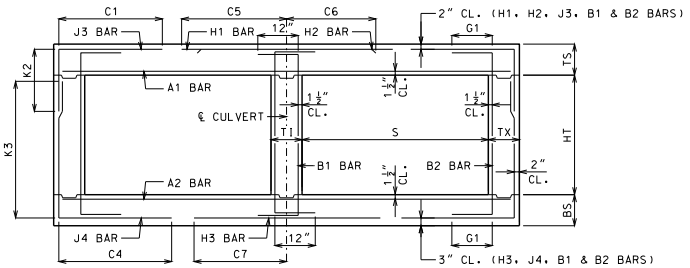

BAR DIMENSIONS DIAGRAM
SYMMETRICAL ABOUT ℄ CULVERT.

GENERAL NOTES:

IF DESIGN FILL IS BETWEEN TABULATED DESIGN FILLS, USE THE NEXT GREATER TABULATED DESIGN FILL, EXCEPT FOR DESIGN FILLS BETWEEN 2 FEET AND 4 FEET. FOR DESIGN FILLS BETWEEN 2 FEET AND 4 FEET USE THE GREATER MEMBER THICKNESS, AREA OF REINFORCEMENT AND BAR DIMENSIONS FROM THE 2 FEET AND 4 FEET TABULATED DESIGN FILLS. AREA OF REINFORCEMENT EQUALS BAR AREA PER FOOT SPACING.

SPECIAL DESIGNS ARE REQUIRED WHEN THE DESIGN FILL IS LESS THAN 1 FOOT OR GREATER THAN 50 FEET.

DIMENSIONS ARE IN INCHES UNLESS OTHERWISE SPECIFIED.

DESIGN FILLS ARE MEASURED FROM THE TOP OF TOP SLAB TO THE TOP OF EARTH FILL OR ROADWAY.

CULVERTS MEET STRENGTH AND SERVICEABILITY REQUIREMENTS FOR THE DESIGN VEHICULAR LIVE LOAD HL-93 MINUS THE LANE LOAD.

MISSOURI HIGHWAYS AND TRANSPORTATION COMMISSION
105 WEST CAPITOL
JEFFERSON CITY, MO 65102
1-888-ASK-MODOT (1-888-275-6636)

STATE OF MISSOURI
DENNIS W. HECKMANN
NUMBER PE-27141
PROFESSIONAL ENGINEER
THIS SHEET HAS BEEN SIGNED, SEALED AND DATED ELECTRONICALLY.

CONCRETE DOUBLE BOX CULVERT

MEMBER THICKNESS
BAR SIZE, SPACING & DIMENSIONS

SPAN (S): 6 FEET
HEIGHT (HT): 8 THRU 9 FEET

DATE EFFECTIVE: 10/01/2011
DATE PREPARED: 9/8/2011

703.47

SHEET NO.
7 OF 27

IF A SEAL IS PRESENT ON THIS SHEET IT HAS BEEN ELECTRONICALLY SEALED AND DATED.

SPAN (S) = 7 FT HEIGHT (HT) = 4 FT OR 5 FT OR 6 FT

DESIGN FILL	MEMBER THICKNESS				TOP SLAB BARS													BOTTOM SLAB BARS												WALL BARS				
					A1 BARS		J3 BARS						H1 BARS			H2 BARS			A2 BARS		J4 BARS					H3 BARS			B1 BARS		B2 BARS		
										K2													K3									
	TS	BS	TX	TI	SIZE	SPA.	SIZE	SPA.	C1	HT=4′	HT=5′	HT=6′	SIZE	SPA.	C5	SIZE	SPA.	C6	SIZE	SPA.	SIZE	SPA.	C4	HT=4′	HT=5′	HT=6′	SIZE	SPA.	C7	SIZE	SPA.	SIZE	SPA.	G1
1 FT	12	8	8	8	5	8	4	8.5	38.1	28.0	28.0	28.0	4	15	73.0	4	15	25.5	4	7	4	6.5	41.8	52	64	76	5	6.5	37.5	5	12	5	12	12
2 FT	12	9	8	8	5	7.5	4	8.5	38.1	28.0	28.0	28.0	4	14	73.0	4	14	24.5	4	7.5	4	8.5	39.9	53	65	77	5	7	37.5	5	12	5	12	12
4 FT	8	8	8	8	4	6	4	6.5	38.4	24.0	24.0	24.0	5	17	48.0	5	17	23.5	4	7	4	7	35.8	52	64	76	5	6	36.5	5	12	5	12	12
6 FT	8	8	8	8	4	7	4	7	33.9	24.0	24.0	24.0	5	17	39.0	5	17	23.5	4	6.5	4	6.5	33.3	52	64	76	6	7	38.5	5	12	5	12	12
8 FT	8	9	8	8	4	7	4	6.5	32.1	24.0	24.0	24.0	5	16	37.0	5	16	24.0	4	6.5	4	8	31.8	53	65	77	5	6	35.5	5	12	5	12	0
10 FT	8	10	8	8	4	6	5	7	31.5	24.0	24.0	24.0	5	15	36.0	5	15	24.0	4	6.5	4	9.5	30.5	54	66	78	5	6.5	35.5	5	12	5	12	0
12 FT	9	10	8	8	4	6	4	6.5	30.5	25.0	25.0	25.0	5	15	35.5	5	15	24.0	5	9	4	8.5	29.8	54	66	78	5	6	35.5	5	12	5	12	0
14 FT	9	11	8	8	5	8.5	5	7	30.4	25.0	25.0	25.0	5	14	35.5	5	14	24.0	5	9	4	8.5	29.1	55	67	79	5	6	35.5	5	12	5	12	0
16 FT	10	11	8	8	4	6	4	6.5	28.5	26.0	26.0	26.0	5	15	34.5	5	15	23.0	5	8.5	4	8	27.8	55	67	79	5	6	35.0	5	12	5	12	0
18 FT	10	12	8	8	5	8	5	8	28.6	26.0	26.0	26.0	5	14	34.5	5	14	23.5	5	8.5	4	8.5	27.4	56	68	80	5	6	35.0	5	12	5	12	0
20 FT	11	12	8	8	5	8	5	9	28.1	27.0	27.0	27.0	5	14	34.5	5	14	23.5	5	7	4	7	27.5	56	68	80	6	7	38.0	5	12	5	12	0
22 FT	12	13	8	8	5	8	5	8.5	27.9	28.0	28.0	28.0	5	13	34.5	5	13	23.0	5	7.5	4	7	27.5	57	69	81	6	7.5	38.0	5	12	5	12	0
24 FT	12	14	8	8	5	7.5	5	8.5	28.0	28.0	28.0	28.0	5	13	34.5	5	13	23.5	5	7.5	4	7	27.3	58	70	82	6	7.5	38.0	5	12	5	12	0
26 FT	13	15	8	8	5	7	5	8.5	27.9	29.0	29.0	29.0	5	12	34.5	5	12	22.5	5	7.5	4	7	27.4	59	71	83	6	7.5	38.0	5	12	5	12	0
28 FT	14	15	8	8	5	7	5	8.5	27.6	30.0	30.0	30.0	5	12	34.0	5	12	22.0	5	7	4	6.5	27.6	59	71	83	6	7	38.0	5	12	5	12	0
30 FT	14	16	8	8	5	6.5	5	8.5	27.8	30.0	30.0	30.0	5	12	34.0	5	12	22.5	5	7	4	6.5	27.5	60	72	84	6	7	38.0	5	12	5	12	0
32 FT	15	17	8	8	5	6.5	5	8	32.8	31.0	31.0	31.0	6	16	43.0	6	16	30.5	5	7.5	4	6	27.8	61	73	85	6	7.5	38.0	5	12	5	12	0
34 FT	16	17	8	8	5	6.5	5	7	32.6	32.0	32.0	32.0	6	15	42.5	6	15	29.5	5	7	4	6	27.9	61	73	85	6	7	38.0	5	12	5	11.5	0
36 FT	16	18	8	8	5	6	5	7	32.8	32.0	36.0	36.0	6	15	42.5	6	15	30.0	5	7	5	6.5	27.9	62	74	86	6	7	38.0	5	12	5	10.5	0
38 FT	17	18	8	8	5	6	5	6.5	32.8	37.0	37.0	37.0	6	14	42.0	6	14	29.5	5	6	5	6.5	28.0	62	74	86	6	6.5	38.0	5	12	5	10	0
40 FT	17	19	8	8	5	6	5	6.5	32.8	37.0	37.0	37.0	6	14	42.0	6	14	30.0	5	6.5	5	6.5	28.0	63	75	87	6	7	38.0	5	12	5	9.5	0
42 FT	18	20	8	8	5	6	5	6.5	32.9	38.0	38.0	38.0	6	14	41.5	6	14	29.5	5	6.5	5	6	28.3	64	76	88	6	7	38.0	5	12	5	9.5	0
44 FT	18	20	8	8	6	8	5	6.5	32.9	38.0	38.0	38.0	6	14	41.5	6	14	29.5	5	6.5	5	6	28.3	64	76	88	6	6.5	38.0	5	12	5	9.5	0
46 FT	19	21	8	8	6	8	5	6	33.0	39.0	39.0	39.0	6	14	41.0	6	14	29.5	5	6.5	6	7.5	31.5	65	77	89	6	6.5	38.0	5	12	5	9.5	0
48 FT	19	21	8	8	6	8	5	6	32.9	39.0	39.0	39.0	6	14	41.0	6	14	29.5	5	6	6	7.5	31.4	65	77	89	6	6.5	38.0	5	12	5	9.5	0
50 FT	20	22	9	8	6	8	5	6.5	33.8	40.0	40.0	40.0	6	15	40.0	6	15	29.0	5	6	5	6	29.0	66	78	90	6	6.5	38.0	5	12	5	8.5	0

SPAN (S) = 7 FT HEIGHT (HT) = 7 FT OR 8 FT

DESIGN FILL	MEMBER THICKNESS				TOP SLAB BARS													BOTTOM SLAB BARS												WALL BARS				
					A1 BARS		J3 BARS						H1 BARS			H2 BARS			A2 BARS		J4 BARS					H3 BARS			B1 BARS		B2 BARS		
										K2													K3									
	TS	BS	TX	TI	SIZE	SPA.	SIZE	SPA.	C1	HT=7′	HT=8′		SIZE	SPA.	C5	SIZE	SPA.	C6	SIZE	SPA.	SIZE	SPA.	C4	HT=7′	HT=8′		SIZE	SPA.	C7	SIZE	SPA.	SIZE	SPA.	G1
1 FT	12	9	8	8	5	7.5	4	8.5	38.1	28.0	28.0		4	15	73.0	4	15	25.5	4	7.5	4	7	56.0	89	101		5	7	37.5	5	12	5	12	12
2 FT	12	9	8	8	5	7.5	4	8	38.1	28.0	28.0		4	15	73.0	4	15	25.0	4	7	4	6.5	51.4	89	101		5	7	37.5	5	12	5	12	12
4 FT	8	9	8	8	4	6	5	6.5	40.1	24.0	24.0		5	17	75.0	5	17	23.5	4	7.5	4	6.5	47.8	89	101		5	7	37.0	5	12	5	12	12
6 FT	8	9	8	8	4	7	5	6.5	44.6	24.0	24.0		5	17	39.5	5	17	23.5	4	7	4	6	43.5	89	101		5	6.5	36.0	5	12	5	12	12
8 FT	8	9	9	8	4	7	4	6	40.1	24.0	24.0		5	16	37.0	5	16	23.5	4	6.5	4	6.5	40.4	89	101		5	6	35.5	5	12	5	12	0
10 FT	8	10	9	8	4	6.5	5	6	38.4	24.0	24.0		5	15	36.0	5	15	24.0	4	6.5	4	7	39.5	90	102		5	6.5	35.5	5	12	5	12	0
12 FT	9	10	9	8	4	6	5	6.5	37.8	25.0	25.0		5	15	35.5	5	15	24.0	5	9	4	6	38.1	90	102		5	6	35.0	5	12	5	12	0
14 FT	9	11	9	8	5	8.5	5	6	37.1	25.0	25.0		5	14	35.0	5	14	23.5	5	9	4	6	37.9	91	103		5	6	35.5	5	12	5	12	0
16 FT	9	11	9	8	5	8.5	5	6	34.8	25.0	25.0		5	14	34.0	5	14	23.5	5	8.5	4	6	35.3	91	103		5	6	35.0	5	12	5	12	0
18 FT	10	12	9	8	5	8.5	5	7	34.9	26.0	30.0		5	14	34.0	5	14	23.5	5	8.5	5	8.5	35.3	92	104		5	6	35.0	5	12	5	12	0
20 FT	11	13	9	8	5	8	5	7.5	34.9	27.0	31.0		5	14	34.0	5	14	23.0	5	8.5	5	8	35.4	93	105		6	8	38.0	5	12	5	12	0
22 FT	11	13	9	8	5	7	5	6.5	34.8	27.0	31.0		5	13	34.0	5	13	23.5	5	7.5	5	8	35.1	93	105		6	7.5	38.0	5	12	5	11.5	0
24 FT	12	14	9	8	5	7.5	5	7	34.8	28.0	32.0		5	13	34.0	5	13	23.0	5	8	5	8	35.4	94	106		6	7.5	38.0	5	12	5	10.5	0
26 FT	13	15	9	8	5	7.5	5	7	34.9	29.0	33.0		5	12	33.5	5	12	22.0	5	8	5	8	35.6	95	107		6	7.5	38.0	5	12	5	9.5	0
28 FT	13	15	9	8	5	6.5	5	6.5	34.8	33.0	33.0		5	12	33.5	5	12	22.5	5	7	5	7.5	35.4	95	107		6	7	38.0	5	12	5	9	0
30 FT	14	16	9	8	5	7	5	6.5	34.9	34.0	34.0		5	12	33.0	5	12	21.5	5	7.5	5	7.5	35.6	96	108		6	7	38.0	5	12	5	8.5	0
32 FT	15	17	9	8	5	7	5	6	40.0	35.0	35.0		6	16	41.5	6	16	29.5	5	7.5	5	7.5	36.0	97	109		6	7.5	38.0	5	12	5	8.5	0
34 FT	15	17	10	8	5	6.5	5	7	40.5	35.0	35.0		6	16	41.5	6	16	30.0	5	6.5	5	7.5	36.0	97	109		6	7	38.0	5	12	5	8.5	0
36 FT	16	18	10	8	5	6.5	5	6.5	40.6	36.0	36.0		6	15	41.0	6	15	29.5	5	7	5	7.5	36.4	98	110		6	7	38.0	5	12	5	8	0
38 FT	16	19	11	8	5	6	5	7	41.3	32.0	36.0		6	15	40.5	6	15	29.5	5	7	5	7	36.8	99	111		6	7	38.0	5	12	5	8.5	0
40 FT	17	19	11	8	5	6	5	7	41.3	33.0	37.0		6	15	40.0	6	15	29.0	5	6.5	5	7	36.8	99	111		6	6.5	38.0	5	12	5	8	0
42 FT	17	20	11	8	5	6	5	6.5	41.4	37.0	37.0		6	15	40.0	6	15	29.0	5	6.5	5	7	36.9	100	112		6	7	38.0	5	12	5	7.5	0
44 FT	18	20	11	8	6	8.5	5	6	41.4	38.0	38.0		6	16	39.5	6	16	29.0	5	6.5	5	7	37.0	100	112		6	6.5	38.0	5	12	5	7.5	0
46 FT	18	21	12	8	6	8	5	6.5	42.1	38.0	38.0		6	15	39.5	6	15	29.0	5	6.5	5	7	37.4	101	113		6	6.5	38.0	5	12	5	7.5	0
48 FT	19	21	12	8	6	8	5	6.5	42.0	39.0	39.0		6	16	39.0	6	16	29.0	5	6	5	6.5	37.5	101	113		6	6.5	38.0	5	12	5	7	0
50 FT	19	22	12	8	6	7.5	5	6	42.1	39.0	39.0		6	15	39.0	6	15	29.0	5	6	5	6.5	37.6	102	114		6	6.5	38.0	5	12	5	7	0

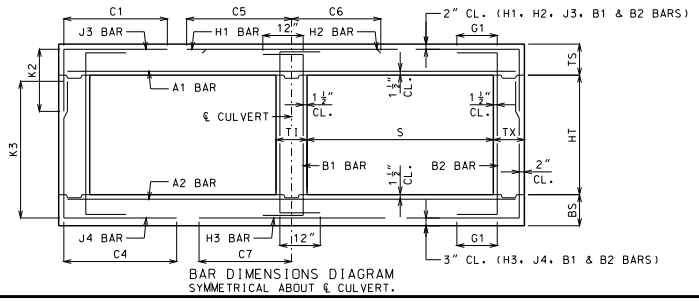

BAR DIMENSIONS DIAGRAM
SYMMETRICAL ABOUT ℄ CULVERT.

GENERAL NOTES:

IF DESIGN FILL IS BETWEEN TABULATED DESIGN FILLS, USE THE NEXT GREATER TABULATED DESIGN FILL, EXCEPT FOR DESIGN FILLS BETWEEN 2 FEET AND 4 FEET. FOR DESIGN FILLS BETWEEN 2 FEET AND 4 FEET USE THE GREATER MEMBER THICKNESS, AREA OF REINFORCEMENT AND BAR DIMENSIONS FROM THE 2 FEET AND 4 FEET TABULATED DESIGN FILLS. AREA OF REINFORCEMENT EQUALS BAR AREA PER FOOT SPACING.

SPECIAL DESIGNS ARE REQUIRED WHEN THE DESIGN FILL IS LESS THAN 1 FOOT OR GREATER THAN 50 FEET.

DIMENSIONS ARE IN INCHES UNLESS OTHERWISE SPECIFIED.

DESIGN FILLS ARE MEASURED FROM THE TOP OF TOP SLAB TO THE TOP OF EARTH FILL OR ROADWAY.

CULVERTS MEET STRENGTH AND SERVICEABILITY REQUIREMENTS FOR THE DESIGN VEHICULAR LIVE LOAD HL-93 MINUS THE LANE LOAD.

MISSOURI HIGHWAYS AND TRANSPORTATION COMMISSION
105 WEST CAPITOL
JEFFERSON CITY, MO 65102
1-888-ASK-MODOT (1-888-275-6636)

STATE OF MISSOURI
DENNIS W. HECKMANN
NUMBER PE-27141
PROFESSIONAL ENGINEER
THIS SHEET HAS BEEN SIGNED, SEALED AND DATED ELECTRONICALLY.

CONCRETE DOUBLE BOX CULVERT

MEMBER THICKNESS
BAR SIZE, SPACING & DIMENSIONS

SPAN (S): 7 FEET
HEIGHT (HT): 4 THRU 8 FEET

DATE EFFECTIVE: 10/01/2011
DATE PREPARED: 9/8/2011

703.47

SHEET NO.
8 OF 27

IF A SEAL IS PRESENT ON THIS SHEET IT HAS BEEN ELECTRONICALLY SEALED AND DATED.

SPAN (S) = 7 FT HEIGHT (HT) = 9 FT OR 10 FT																															
DESIGN FILL	MEMBER THICKNESS				TOP SLAB BARS													BOTTOM SLAB BARS											WALL BARS				
					A1 BARS		J3 BARS					H1 BARS			H2 BARS			A2 BARS		J4 BARS					H3 BARS			B1 BARS		B2 BARS		
	TS	BS	TX	TI	SIZE	SPA.	SIZE	SPA.	C1	K2 HT=9'	K2 HT=10'	SIZE	SPA.	C5	SIZE	SPA.	C6	SIZE	SPA.	SIZE	SPA.	C4	K3 HT=9'	K3 HT=10'	SIZE	SPA.	C7	SIZE	SPA.	SIZE	SPA.	G1
1 FT	12	9	8	8	5	7.5	4	6	38.1	28.0	28.0	4	16	73.0	4	16	26.0	4	7	6	7	68.1	113	125	5	7	38.0	5	12	5	12	12
2 FT	12	9	8	8	5	7.5	5	8.5	38.1	28.0	32.0	4	15	73.0	4	15	25.0	4	6.5	6	6.5	64.9	113	125	5	6.5	37.5	5	12	5	12	12
4 FT	8	9	9	8	4	6	5	6	40.8	24.0	28.0	5	17	75.5	5	17	23.5	4	7.5	5	6	57.8	113	125	5	7	37.0	5	12	5	11.5	12
6 FT	8	9	10	8	4	7	5	6.5	55.0	24.0	28.0	5	17	39.5	5	17	23.0	4	7	5	6.5	51.9	113	125	5	6.5	36.0	5	12	5	11.5	12
8 FT	8	9	10	8	4	7	5	6	49.0	28.0	28.0	5	16	37.0	5	16	23.5	4	6.5	5	6	49.3	113	125	5	6	35.5	5	12	5	10.5	0
10 FT	8	10	10	8	4	6.5	6	7	49.0	28.0	28.0	5	15	36.0	5	15	24.0	4	6.5	5	6	49.1	114	126	5	6	35.5	5	12	5	10	0
12 FT	9	10	10	8	4	6	5	6	46.1	29.0	29.0	5	16	35.5	5	16	23.5	5	9	6	7	50.3	114	126	5	6	35.0	5	12	5	9.5	0
14 FT	9	11	10	8	5	9	5	6	44.6	29.0	29.0	5	15	35.0	5	15	23.5	5	9	6	7.5	50.6	115	127	5	6	35.0	5	12	5	8.5	0
16 FT	9	11	10	8	5	9	5	6	41.5	29.0	29.0	5	14	34.0	5	14	23.5	5	8.5	5	6	44.0	115	127	5	6	35.0	5	12	5	9.5	0
18 FT	10	12	10	8	5	8.5	5	6.5	42.0	30.0	30.0	5	15	34.0	5	15	23.5	5	8.5	5	6	44.3	116	128	5	6	35.0	5	12	5	8.5	0
20 FT	11	13	10	8	5	8.5	5	6	42.4	31.0	31.0	5	14	33.5	5	14	22.5	5	8.5	5	6	44.6	117	129	6	8	38.0	5	12	5	8	0
22 FT	11	13	10	8	5	7.5	5	6	42.1	31.0	31.0	5	14	33.5	5	14	23.5	5	7.5	6	7	47.3	117	129	6	7.5	38.0	5	12	5	8	0
24 FT	12	14	10	8	5	7.5	5	6	42.5	32.0	32.0	5	13	33.5	5	13	22.5	5	8	6	7.5	47.6	118	130	6	7.5	38.0	5	12	5	8	0
26 FT	13	15	10	8	5	7.5	6	7	45.8	33.0	37.0	5	12	33.0	5	12	21.5	5	8	6	7.5	47.9	119	131	6	7.5	38.0	5	12	5	8	0
28 FT	13	16	11	8	5	7	5	6	42.9	33.0	33.0	5	12	32.5	5	12	22.0	5	8	5	6.5	45.3	120	132	6	7.5	38.0	5	12	5	7.5	0
30 FT	14	16	11	8	5	7	6	7.5	46.1	34.0	34.0	5	12	32.0	5	12	21.0	5	7.5	5	6	45.0	120	132	6	7	38.0	5	12	5	7.5	0
32 FT	14	17	12	8	5	7	5	6	43.4	34.0	34.0	5	12	32.0	5	12	21.5	5	7.5	5	6.5	45.4	121	133	6	7	38.0	5	12	5	7	0
34 FT	15	17	12	8	5	6.5	6	8.5	52.6	35.0	35.0	6	16	40.5	6	16	29.5	5	6.5	5	6.5	45.1	121	133	6	7	38.0	5	12	5	7	0
36 FT	15	18	13	8	5	6	6	8.5	52.9	35.0	35.0	6	16	40.0	6	16	29.5	5	7	5	6	45.5	122	134	6	7	38.0	5	12	5	6.5	0
38 FT	16	19	13	8	5	6.5	6	8	53.1	36.0	36.0	6	16	39.5	6	16	29.0	5	7	5	6	45.9	123	135	6	7	38.0	5	12	5	6.5	0
40 FT	17	19	13	8	5	6	6	7.5	53.4	37.0	37.0	5	12	35.0	5	12	25.0	5	6.5	5	6	45.8	123	135	6	6.5	38.0	5	12	5	6.5	0
42 FT	17	20	14	8	5	6	6	8	53.8	37.0	37.0	6	16	39.0	6	16	29.0	5	6.5	5	6	46.1	124	136	6	6.5	38.5	5	12	5	6	0
44 FT	17	20	14	8	6	8.5	6	7.5	53.6	37.0	37.0	6	15	39.0	6	15	29.0	5	6	5	6	46.1	124	136	6	6.5	38.5	5	12	5	6	0
46 FT	18	21	14	8	6	8	6	7	53.9	38.0	38.0	6	17	38.5	6	17	29.0	5	6.5	5	6	46.5	125	137	6	6.5	38.0	5	12	5	6	0
48 FT	18	22	15	8	6	8	6	7.5	54.3	38.0	42.0	6	16	38.5	6	16	29.0	5	6.5	6	8	49.9	126	138	6	6.5	38.5	5	12	5	6	0
50 FT	18	22	15	8	6	7.5	6	7.5	54.3	38.0	42.0	6	15	38.5	6	15	29.0	5	6	6	8	49.9	126	138	6	6	38.5	5	12	6	8	0

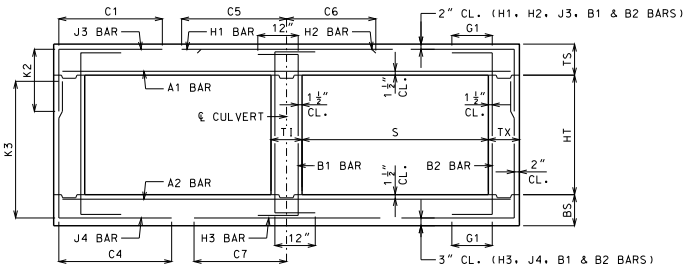

BAR DIMENSIONS DIAGRAM
SYMMETRICAL ABOUT ℄ CULVERT.

GENERAL NOTES:

IF DESIGN FILL IS BETWEEN TABULATED DESIGN FILLS, USE THE NEXT GREATER TABULATED DESIGN FILL, EXCEPT FOR DESIGN FILLS BETWEEN 2 FEET AND 4 FEET. FOR DESIGN FILLS BETWEEN 2 FEET AND 4 FEET USE THE GREATER MEMBER THICKNESS, AREA OF REINFORCEMENT AND BAR DIMENSIONS FROM THE 2 FEET AND 4 FEET TABULATED DESIGN FILLS. AREA OF REINFORCEMENT EQUALS BAR AREA PER FOOT SPACING.

SPECIAL DESIGNS ARE REQUIRED WHEN THE DESIGN FILL IS LESS THAN 1 FOOT OR GREATER THAN 50 FEET.

DIMENSIONS ARE IN INCHES UNLESS OTHERWISE SPECIFIED.

DESIGN FILLS ARE MEASURED FROM THE TOP OF TOP SLAB TO THE TOP OF EARTH FILL OR ROADWAY.

CULVERTS MEET STRENGTH AND SERVICEABILITY REQUIREMENTS FOR THE DESIGN VEHICULAR LIVE LOAD HL-93 MINUS THE LANE LOAD.

MISSOURI HIGHWAYS AND TRANSPORTATION COMMISSION
105 WEST CAPITOL
JEFFERSON CITY, MO 65102
1-888-ASK-MODOT (1-888-275-6636)

STATE OF MISSOURI
DENNIS W. HECKMANN
NUMBER PE-27141
PROFESSIONAL ENGINEER
THIS SHEET HAS BEEN SIGNED, SEALED AND DATED ELECTRONICALLY.

CONCRETE DOUBLE BOX CULVERT

MEMBER THICKNESS
BAR SIZE, SPACING & DIMENSIONS

SPAN (S): 7 FEET
HEIGHT (HT): 9 THRU 10 FEET

DATE EFFECTIVE: 10/01/2011
DATE PREPARED: 9/8/2011

703.47

SHEET NO.
9 OF 27

IF A SEAL IS PRESENT ON THIS SHEET IT HAS BEEN ELECTRONICALLY SEALED AND DATED.

SPAN (S) = 8 FT HEIGHT (HT) = 4 FT OR 5 FT OR 6 FT

DESIGN FILL	MEMBER THICKNESS				TOP SLAB BARS												BOTTOM SLAB BARS												WALL BARS				
					A1 BARS		J3 BARS						H1 BARS			H2 BARS			A2 BARS		J4 BARS					H3 BARS			B1 BARS		B2 BARS		
										K2												K3									
	TS	BS	TX	TI	SIZE	SPA.	SIZE	SPA.	C1	HT=4′	HT=5′	HT=6′	SIZE	SPA.	C5	SIZE	SPA.	C6	SIZE	SPA.	SIZE	SPA.	C4	HT=4′	HT=5′	HT=6′	SIZE	SPA.	C7	SIZE	SPA.	SIZE	SPA.	G1
1 FT	12	9	8	8	5	7	4	8.5	41.8	28.0	28.0	28.0	4	12	81.5	4	12	26.5	4	7	4	8	43.0	53	65	77	5	6.5	41.0	5	12	5	12	12
2 FT	13	9	8	8	5	7.5	4	7.5	41.8	29.0	29.0	29.0	4	13	81.5	4	13	26.5	4	6.5	4	7	39.1	53	65	77	5	6	40.5	5	12	5	12	12
4 FT	8	8	8	8	4	6	5	6.5	36.4	24.0	24.0	24.0	5	15	51.0	5	15	26.5	4	6	4	6	35.3	52	64	76	6	6.5	42.5	5	9.5	5	12	12
6 FT	8	9	8	8	4	6	5	6.5	34.3	24.0	24.0	24.0	5	15	42.5	5	15	26.0	4	6	4	7.5	33.1	53	65	77	6	7	42.0	5	12	5	12	12
8 FT	8	9	8	8	4	6	5	6	33.1	24.0	24.0	24.0	5	13	40.5	5	13	25.5	5	8.5	4	7	31.6	53	65	77	6	6.5	41.5	5	12	5	12	0
10 FT	9	10	8	8	5	8.5	4	6	31.9	25.0	25.0	25.0	5	14	39.5	5	14	25.5	5	8	4	8	30.4	54	66	78	6	7	41.5	5	12	5	12	0
12 FT	10	11	8	8	5	8	4	6	30.6	26.0	26.0	26.0	5	14	39.0	5	14	25.0	5	8	4	8	29.3	55	67	79	6	7	41.5	5	12	5	12	0
14 FT	11	12	8	8	5	8	4	6	29.8	27.0	27.0	27.0	5	14	38.5	5	14	25.0	5	7.5	4	7.5	28.6	56	68	80	6	7	41.5	5	12	5	12	0
16 FT	11	13	8	8	5	7.5	5	8.5	29.6	27.0	27.0	27.0	5	12	38.5	5	12	25.0	5	7.5	4	8	28.0	57	69	81	6	7	41.5	5	12	5	12	0
18 FT	12	13	8	8	5	7.5	4	6	27.5	28.0	28.0	28.0	5	13	37.5	5	13	25.0	5	7	4	7.5	26.8	57	69	81	6	7	41.0	5	12	5	12	0
20 FT	12	14	8	8	5	7	5	8.5	27.8	28.0	28.0	28.0	5	12	37.5	5	12	25.0	5	7	4	7.5	26.4	58	70	82	6	7	41.5	5	12	5	12	0
22 FT	13	15	8	8	5	6.5	6	8.5	27.4	29.0	29.0	29.0	5	12	37.5	5	12	25.0	5	7	4	7	26.4	59	71	83	6	7	41.5	5	12	5	12	0
24 FT	14	16	8	8	5	6.5	5	8.5	27.3	30.0	30.0	30.0	5	12	37.5	5	12	24.5	5	7	4	6.5	26.5	60	72	84	6	7	41.5	5	12	5	12	0
26 FT	15	16	8	8	5	6.5	5	8	31.9	31.0	31.0	31.0	6	16	46.5	6	16	33.0	5	6.5	4	6.5	26.6	60	72	84	6	7	41.0	5	12	5	12	0
28 FT	16	17	8	8	5	6	5	7	31.8	32.0	32.0	32.0	6	15	46.0	6	15	32.0	5	6.5	4	6	26.8	61	73	85	6	6.5	41.0	5	12	5	12	0
30 FT	16	18	8	8	5	6	5	7	32.0	32.0	32.0	36.0	6	15	46.0	6	15	33.0	5	6.5	5	6.5	26.6	62	74	86	6	6.5	41.0	5	12	5	12	0
32 FT	17	19	8	8	5	6	5	6.5	31.9	37.0	37.0	37.0	6	14	45.5	6	14	32.0	5	6.5	5	6.5	26.8	63	75	87	6	6.5	41.0	5	12	5	12	0
34 FT	18	19	8	8	6	8.5	5	6.5	31.8	38.0	38.0	38.0	6	13	45.5	6	13	31.0	5	6	5	6.5	26.9	63	75	87	6	6	41.0	5	12	5	11	0
36 FT	18	20	8	8	6	8	5	6.5	31.9	38.0	38.0	38.0	6	13	45.5	6	13	32.0	5	6	5	6	26.9	64	76	88	6	6	41.0	5	12	5	10	0
38 FT	19	21	8	8	6	8	5	6	32.0	39.0	39.0	39.0	6	13	45.0	6	13	31.0	5	6	6	7.5	30.1	65	77	89	6	6	41.0	5	12	5	9.5	0
40 FT	20	22	8	8	6	7.5	6	7.5	36.0	44.0	44.0	44.0	6	13	44.5	6	13	30.5	5	6	6	7	30.4	66	78	90	6	6	41.0	5	12	5	9.5	0
42 FT	20	22	8	8	6	7.5	6	7.5	36.0	44.0	44.0	44.0	6	12	44.5	6	12	30.5	6	8.5	6	7	30.3	66	78	90	6	6	41.0	5	12	5	9.5	0
44 FT	21	23	8	8	6	7.5	6	7	36.0	45.0	45.0	45.0	6	12	43.5	6	12	30.0	6	8.5	6	6.5	30.5	67	79	91	6	6	41.0	5	12	5	9.5	0
46 FT	21	23	8	8	6	7	6	7	36.0	45.0	45.0	45.0	6	12	43.5	6	12	30.0	6	8	6	6.5	30.5	67	79	91	7	7.5	44.0	5	12	5	9.5	0
48 FT	22	24	8	8	6	7	6	6.5	36.1	46.0	46.0	46.0	6	12	43.0	6	12	30.0	6	8	6	6	30.8	68	80	92	7	7.5	44.0	5	12	5	9	0
50 FT	22	24	8	8	6	6.5	6	6.5	36.1	46.0	46.0	46.0	6	12	43.0	6	12	30.0	6	7.5	6	6	30.8	68	80	92	7	7.5	44.0	5	12	5	8.5	0

SPAN (S) = 8 FT HEIGHT (HT) = 7 FT OR 8 FT OR 9 FT

DESIGN FILL	MEMBER THICKNESS				TOP SLAB BARS												BOTTOM SLAB BARS												WALL BARS				
					A1 BARS		J3 BARS						H1 BARS			H2 BARS			A2 BARS		J4 BARS					H3 BARS			B1 BARS		B2 BARS		
										K2												K3									
	TS	BS	TX	TI	SIZE	SPA.	SIZE	SPA.	C1	HT=7′	HT=8′	HT=9′	SIZE	SPA.	C5	SIZE	SPA.	C6	SIZE	SPA.	SIZE	SPA.	C4	HT=7′	HT=8′	HT=9′	SIZE	SPA.	C7	SIZE	SPA.	SIZE	SPA.	G1
1 FT	12	9	8	8	5	7	4	6.5	41.8	28.0	28.0	28.0	4	12	81.5	4	12	27.5	4	6	5	6.5	61.6	89	101	113	5	6	41.0	5	12	5	12	12
2 FT	13	10	8	8	5	7	4	6.5	41.8	29.0	29.0	29.0	4	13	81.5	4	13	27.0	4	6.5	4	6	58.3	90	102	114	5	6.5	40.5	5	12	5	12	12
4 FT	8	9	8	8	4	6	6	7.5	43.8	24.0	24.0	28.0	5	15	83.5	5	15	27.0	4	6	5	6	52.3	89	101	113	5	6	40.0	5	11	5	12	12
6 FT	8	10	8	8	4	6	6	7.5	51.4	24.0	24.0	28.0	5	15	43.0	5	15	26.0	4	6.5	5	6	49.0	90	102	114	5	6.5	39.5	5	12	5	12	12
8 FT	8	11	8	8	4	6	6	7.5	46.6	24.0	24.0	28.0	5	13	40.5	5	13	25.5	4	6.5	5	6.5	46.3	91	103	115	5	6	39.0	5	12	5	12	0
10 FT	9	11	8	8	5	8.5	6	7	45.3	25.0	25.0	29.0	5	14	39.5	5	14	25.5	5	8.5	5	6	43.6	91	103	115	5	6	38.5	5	12	5	11	0
12 FT	10	12	8	8	5	8	6	7	44.4	26.0	30.0	30.0	5	14	39.0	5	14	25.0	5	8.5	5	6	42.5	92	104	116	5	6	38.5	5	12	5	10	0
14 FT	11	12	8	8	5	8	6	7	43.5	27.0	31.0	35.0	5	14	38.5	5	14	25.0	5	7.5	6	7	44.4	92	104	116	6	7	41.5	5	12	5	9.5	0
16 FT	11	13	8	8	5	7.5	6	6.5	42.9	27.0	31.0	35.0	5	12	38.0	5	12	25.0	5	7.5	6	7	44.0	93	105	117	6	7.5	41.5	5	12	5	9.5	0
18 FT	12	13	8	8	5	7.5	5	6	37.1	28.0	32.0	32.0	5	13	37.5	5	13	25.0	5	7	6	7.5	41.1	93	105	117	6	7	41.0	5	12	5	9.5	0
20 FT	12	14	8	8	5	7	6	7	39.9	32.0	32.0	36.0	5	12	37.5	5	12	25.0	5	7	6	7.5	41.1	94	106	118	6	7	41.0	5	12	5	9.5	0
22 FT	13	15	8	8	5	6.5	6	7	39.9	33.0	33.0	37.0	5	12	37.0	5	12	25.0	5	7	6	7.5	41.3	95	107	119	6	7	41.0	5	12	5	9.5	0
24 FT	14	16	8	8	5	6.5	6	7	40.0	34.0	34.0	38.0	5	12	37.0	5	12	24.0	5	7	6	7	41.4	96	108	120	6	7	41.0	5	12	5	9	0
26 FT	15	16	9	8	5	6.5	5	6	42.4	35.0	35.0	35.0	6	16	45.5	6	16	32.0	5	6.5	5	6	38.5	96	108	120	6	7	41.0	5	12	5	8.5	0
28 FT	15	17	10	8	5	6	5	6.5	42.9	31.0	35.0	35.0	6	16	45.5	6	16	33.0	5	6.5	5	7.5	38.8	97	109	121	6	6.5	41.5	5	12	5	8	0
30 FT	16	18	11	8	5	6	5	6.5	43.6	32.0	36.0	36.0	6	15	44.5	6	15	31.5	5	6.5	5	7	39.1	98	110	122	6	6.5	41.5	5	12	5	8.5	0
32 FT	17	19	11	8	5	6	5	6.5	43.6	33.0	37.0	37.0	6	14	44.0	6	14	31.0	5	6.5	5	7	39.4	99	111	123	6	6	41.5	5	12	5	7.5	0
34 FT	17	20	11	8	6	8	5	6	43.8	37.0	37.0	37.0	6	14	44.0	6	14	31.5	5	6.5	5	7	39.5	100	112	124	6	6	41.5	5	12	5	7.5	0
36 FT	18	20	12	8	6	8	5	6.5	44.3	38.0	38.0	38.0	6	13	43.5	6	13	30.5	5	6	5	6.5	39.6	100	112	124	6	6	41.5	5	12	5	7.5	0
38 FT	18	21	12	8	6	7.5	5	6	44.4	38.0	38.0	38.0	6	13	43.5	6	13	31.0	5	6	5	6.5	39.9	101	113	125	6	6	41.5	5	12	5	7	0
40 FT	19	22	12	8	6	7.5	6	8.5	48.4	39.0	39.0	39.0	6	13	42.5	6	13	30.0	5	6	5	6.5	40.1	102	114	126	6	6	41.5	5	12	5	7	0
42 FT	19	22	13	8	6	7	5	6	45.0	39.0	39.0	39.0	6	13	42.5	6	13	30.5	6	8	5	6.5	40.3	102	114	126	7	7.5	44.5	5	12	5	7	0
44 FT	20	23	13	8	6	7	6	8.5	49.1	40.0	40.0	40.0	6	13	42.0	6	13	30.0	6	8	5	6	40.5	103	115	127	7	7.5	44.5	5	12	5	7	0
46 FT	20	24	13	8	6	6.5	6	8	49.3	40.0	40.0	40.0	6	12	42.0	6	12	30.0	6	8	5	6	40.6	104	116	128	7	7.5	44.5	5	12	5	6.5	0
48 FT	21	24	13	8	6	7	6	7.5	49.1	41.0	41.0	41.0	6	13	41.5	6	13	29.5	6	8	5	6	40.8	104	116	128	7	7.5	44.5	5	12	5	6.5	0
50 FT	21	25	14	8	6	6.5	6	8	49.9	41.0	41.0	41.0	6	13	41.5	6	13	29.5	6	8	5	6.5	41.1	105	117	129	7	7.5	44.5	5	12	5	6.5	0

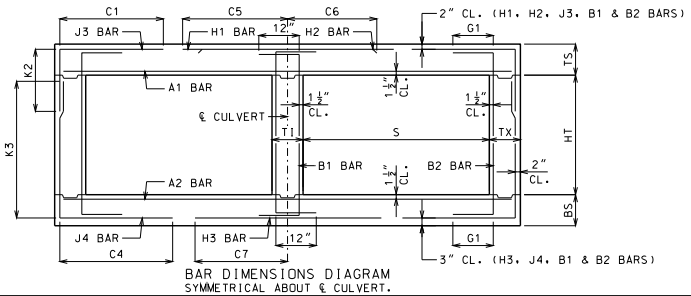

BAR DIMENSIONS DIAGRAM
SYMMETRICAL ABOUT ℄ CULVERT.

GENERAL NOTES:

IF DESIGN FILL IS BETWEEN TABULATED DESIGN FILLS, USE THE NEXT GREATER TABULATED DESIGN FILL, EXCEPT FOR DESIGN FILLS BETWEEN 2 FEET AND 4 FEET. FOR DESIGN FILLS BETWEEN 2 FEET AND 4 FEET USE THE GREATER MEMBER THICKNESS, AREA OF REINFORCEMENT AND BAR DIMENSIONS FROM THE 2 FEET AND 4 FEET TABULATED DESIGN FILLS. AREA OF REINFORCEMENT EQUALS BAR AREA PER FOOT SPACING.

SPECIAL DESIGNS ARE REQUIRED WHEN THE DESIGN FILL IS LESS THAN 1 FOOT OR GREATER THAN 50 FEET.

DIMENSIONS ARE IN INCHES UNLESS OTHERWISE SPECIFIED.

DESIGN FILLS ARE MEASURED FROM THE TOP OF TOP SLAB TO THE TOP OF EARTH FILL OR ROADWAY.

CULVERTS MEET STRENGTH AND SERVICEABILITY REQUIREMENTS FOR THE DESIGN VEHICULAR LIVE LOAD HL-93 MINUS THE LANE LOAD.

MISSOURI HIGHWAYS AND TRANSPORTATION COMMISSION
105 WEST CAPITOL
JEFFERSON CITY, MO 65102
1-888-ASK-MODOT (1-888-275-6636)

STATE OF MISSOURI
DENNIS W. HECKMANN
NUMBER PE-27141
PROFESSIONAL ENGINEER
THIS SHEET HAS BEEN SIGNED, SEALED AND DATED ELECTRONICALLY.

CONCRETE DOUBLE BOX CULVERT

MEMBER THICKNESS
BAR SIZE, SPACING & DIMENSIONS

SPAN (S): 8 FEET
HEIGHT (HT): 4 THRU 9 FEET

DATE EFFECTIVE: 10/01/2011
DATE PREPARED: 9/8/2011

703.47

SHEET NO.
10 OF 27

IF A SEAL IS PRESENT ON THIS SHEET IT HAS BEEN ELECTRONICALLY SEALED AND DATED.

SPAN (S) = 8 FT HEIGHT (HT) = 10 FT OR 11 FT

DESIGN FILL	MEMBER THICKNESS				TOP SLAB BARS							H1 BARS			H2 BARS			BOTTOM SLAB BARS									H3 BARS			WALL BARS				
					A1 BARS		J3 BARS			K2								A2 BARS		J4 BARS			K3						B1 BARS		B2 BARS		
	TS	BS	TX	TI	SIZE	SPA.	SIZE	SPA.	C1	HT=10'	HT=11'	SIZE	SPA.	C5	SIZE	SPA.	C6	SIZE	SPA.	SIZE	SPA.	C4	HT=10'	HT=11'	SIZE	SPA.	C7	SIZE	SPA.	SIZE	SPA.	G1
1 FT	12	9	8	9	5	7	5	7.5	41.9	32.0	32.0	4	12	81.5	4	12	27.5	5	9	6	6	73.9	125	137	5	6	41.5	5	12	5	10.5	12
2 FT	13	10	9	9	5	7	5	8	42.5	29.0	33.0	4	13	82.0	4	13	27.0	4	6	5	6	66.8	126	138	5	6.5	41.0	5	12	5	11	12
4 FT	8	11	9	9	4	6	6	7	44.5	24.0	28.0	5	16	84.0	5	16	27.0	4	7	5	6	66.0	127	139	5	7.5	41.0	5	10.5	5	9.5	12
6 FT	8	11	9	9	4	6	6	7	61.5	28.0	32.0	5	15	43.0	5	15	26.0	4	6.5	6	7	64.5	127	139	5	7	40.0	5	11.5	5	9	12
8 FT	8	11	9	9	4	6	6	7	55.6	28.0	32.0	5	14	40.5	5	14	25.5	4	6	6	6.5	60.4	127	139	5	6	39.5	5	11.5	5	8.5	0
10 FT	9	11	9	9	5	8.5	6	7.5	54.9	29.0	33.0	5	14	39.5	5	14	25.5	5	8.5	6	6	57.5	127	139	5	6	39.0	5	12	5	8.5	0
12 FT	10	11	9	9	5	8	5	6	51.1	30.0	30.0	5	14	39.0	5	14	25.5	5	7.5	6	6	55.3	127	139	6	7	41.5	5	12	5	8.5	0
14 FT	10	12	9	9	5	8	6	6.5	52.0	30.0	34.0	5	13	38.5	5	13	25.5	5	7.5	6	6	54.8	128	140	6	7	41.5	5	12	5	8.5	0
16 FT	11	13	10	9	5	7.5	5	6	48.6	31.0	31.0	5	13	38.0	5	13	25.5	5	7.5	6	6.5	54.1	129	141	6	7.5	41.5	5	12	5	8	0
18 FT	11	13	10	9	5	7.5	5	6	45.1	31.0	31.0	5	12	37.0	5	12	25.0	5	7	6	6.5	50.4	129	141	6	7	41.5	5	12	5	8	0
20 FT	12	14	10	9	5	7	6	7.5	48.4	32.0	36.0	5	13	37.0	5	13	25.0	5	7	6	6.5	50.5	130	142	6	7.5	41.5	5	12	5	8	0
22 FT	13	15	10	9	5	7	6	7	48.5	33.0	37.0	5	12	37.0	5	12	24.5	5	7	6	6.5	50.6	131	143	6	7	41.5	5	12	5	8	0
24 FT	13	16	11	9	5	6.5	6	8	48.5	33.0	33.0	5	12	36.5	5	12	25.0	5	7	5	6	47.8	132	144	6	7	41.5	5	12	5	7.5	0
26 FT	14	16	12	9	5	6.5	5	6	46.0	34.0	34.0	5	12	36.0	5	12	24.5	5	6	5	6	47.5	132	144	6	7	41.5	5	12	5	7	0
28 FT	15	17	12	9	5	6.5	6	8	55.3	35.0	35.0	6	16	44.5	6	16	32.5	5	6.5	5	6	47.8	133	145	6	6.5	41.5	5	12	5	7	0
30 FT	16	18	13	9	5	6.5	6	8	55.8	36.0	36.0	6	15	44.0	6	15	31.5	5	6.5	5	6	48.0	134	146	6	6.5	41.5	5	12	5	6.5	0
32 FT	16	19	13	9	5	6	6	7.5	55.8	36.0	36.0	6	15	44.0	6	15	32.0	5	6.5	5	6	48.3	135	147	6	6	41.5	5	12	5	6.5	0
34 FT	17	20	13	9	5	6	6	7	56.0	37.0	37.0	6	14	43.5	6	14	31.0	5	6.5	5	6	48.5	136	148	6	6.5	41.5	5	12	5	6.5	0
36 FT	17	20	14	9	6	8	6	7.5	56.1	37.0	37.0	6	14	43.0	6	14	31.5	5	6	5	6	48.6	136	148	6	6	41.5	5	12	5	6	0
38 FT	18	21	14	9	6	8	6	7	56.4	38.0	38.0	6	13	42.5	6	13	30.5	5	6	5	6	48.9	137	149	6	6	41.5	5	12	5	6	0
40 FT	18	22	15	9	6	7	6	7.5	56.8	38.0	42.0	6	13	42.5	6	13	30.5	5	6	6	8	52.3	138	150	6	6	41.5	5	12	6	8	0
42 FT	19	22	15	9	6	7.5	6	7	57.0	39.0	43.0	6	14	42.0	6	14	30.0	6	8.5	6	8	52.3	138	150	7	7.5	44.5	5	12	6	8	0
44 FT	19	23	15	9	6	6.5	6	6.5	56.9	39.0	43.0	6	13	42.0	6	13	30.0	6	8.5	6	8	52.5	139	151	7	8	44.5	5	12	6	8	0
46 FT	20	24	16	9	6	7	6	7	57.6	40.0	44.0	6	14	41.5	6	14	30.0	6	8	6	7.5	52.9	140	152	7	8	44.5	5	12	6	8	0
48 FT	20	24	16	9	6	6.5	6	6.5	57.5	40.0	44.0	6	13	41.5	6	13	30.0	6	8	6	7.5	52.9	140	152	7	7.5	44.5	5	12	6	8	0
50 FT	21	25	16	9	6	6.5	6	6	57.8	41.0	45.0	6	14	41.0	6	14	30.0	6	8	6	7.5	53.1	141	153	7	7.5	44.5	5	12	6	8	0

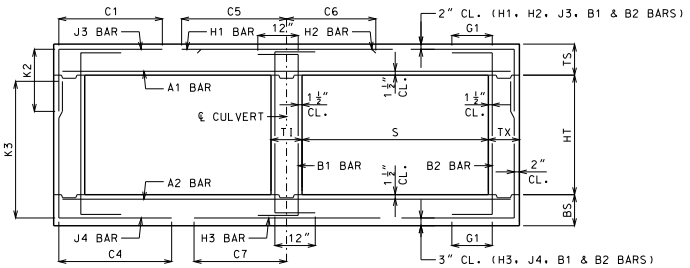

BAR DIMENSIONS DIAGRAM
SYMMETRICAL ABOUT ℄ CULVERT.

GENERAL NOTES:

IF DESIGN FILL IS BETWEEN TABULATED DESIGN FILLS, USE THE NEXT GREATER TABULATED DESIGN FILL, EXCEPT FOR DESIGN FILLS BETWEEN 2 FEET AND 4 FEET. FOR DESIGN FILLS BETWEEN 2 FEET AND 4 FEET USE THE GREATER MEMBER THICKNESS, AREA OF REINFORCEMENT AND BAR DIMENSIONS FROM THE 2 FEET AND 4 FEET TABULATED DESIGN FILLS. AREA OF REINFORCEMENT EQUALS BAR AREA PER FOOT SPACING.

SPECIAL DESIGNS ARE REQUIRED WHEN THE DESIGN FILL IS LESS THAN 1 FOOT OR GREATER THAN 50 FEET.

DIMENSIONS ARE IN INCHES UNLESS OTHERWISE SPECIFIED.

DESIGN FILLS ARE MEASURED FROM THE TOP OF TOP SLAB TO THE TOP OF EARTH FILL OR ROADWAY.

CULVERTS MEET STRENGTH AND SERVICEABILITY REQUIREMENTS FOR THE DESIGN VEHICULAR LIVE LOAD HL-93 MINUS THE LANE LOAD.

MISSOURI HIGHWAYS AND TRANSPORTATION COMMISSION
105 WEST CAPITOL
JEFFERSON CITY, MO 65102
1-888-ASK-MODOT (1-888-275-6636)

STATE OF MISSOURI
DENNIS W. HECKMANN
NUMBER PE-27141
PROFESSIONAL ENGINEER
THIS SHEET HAS BEEN SIGNED, SEALED AND DATED ELECTRONICALLY.

CONCRETE DOUBLE BOX CULVERT

MEMBER THICKNESS
BAR SIZE, SPACING & DIMENSIONS

SPAN (S): 8 FEET
HEIGHT (HT): 10 THRU 11 FEET

DATE EFFECTIVE: 10/01/2011
DATE PREPARED: 9/8/2011

703.47

SHEET NO.
11 OF 27

IF A SEAL IS PRESENT ON THIS SHEET IT HAS BEEN ELECTRONICALLY SEALED AND DATED.

SPAN (S) = 9 FT HEIGHT (HT) = 5 FT OR 6 FT OR 7 FT

DESIGN FILL	MEMBER THICKNESS				TOP SLAB BARS												BOTTOM SLAB BARS											WALL BARS				
					A1 BARS		J3 BARS						H1 BARS			H2 BARS			A2 BARS		J4 BARS					H3 BARS			B1 BARS		B2 BARS		
										K2												K3									
	TS	BS	TX	TI	SIZE	SPA.	SIZE	SPA.	C1	HT=5′	HT=6′	HT=7′	SIZE	SPA.	C5	SIZE	SPA.	C6	SIZE	SPA.	SIZE	SPA.	C4	HT=5′	HT=6′	HT=7′	SIZE	SPA.	C7	SIZE	SPA.	SIZE	SPA.	G1
1 FT	13	9	8	8	5	6.5	4	7.5	45.3	29.0	29.0	29.0	5	17	89.5	5	17	28.5	4	6	4	6	47.3	65	77	89	5	6	44.0	5	12	5	12	12
2 FT	13	10	8	8	5	6.5	4	7.5	45.3	29.0	29.0	29.0	5	16	89.5	5	16	27.5	4	6	4	7.5	44.5	66	78	90	5	6.5	44.0	5	12	5	12	12
4 FT	9	9	8	8	5	8.5	5	6.5	42.1	25.0	25.0	25.0	5	15	59.0	5	15	28.5	5	8	4	6	39.5	65	77	89	6	6.5	46.0	5	11	5	12	12
6 FT	9	9	8	8	5	8.5	5	6.5	36.9	25.0	25.0	29.0	5	14	47.0	5	14	27.5	5	7.5	5	7	36.5	65	77	89	6	6	45.0	5	12	5	12	12
8 FT	9	10	8	8	5	8.5	5	6.5	35.6	25.0	25.0	25.0	5	12	44.0	5	12	27.0	5	7.5	4	6.5	34.6	66	78	90	6	6.5	45.0	5	12	5	12	0
10 FT	10	11	8	8	5	8	5	7.5	34.3	26.0	26.0	26.0	5	12	43.0	5	12	26.5	5	7.5	4	6.5	33.3	67	79	91	6	6.5	44.5	5	12	5	12	0
12 FT	11	12	8	8	5	7.5	5	8.5	33.0	27.0	27.0	27.0	5	12	42.5	5	12	26.5	5	7	4	6	32.1	68	80	92	6	6.5	44.5	5	12	5	12	0
14 FT	12	13	8	8	5	7	5	8.5	32.1	28.0	28.0	28.0	5	12	42.0	5	12	26.5	5	6.5	4	6	31.5	69	81	93	6	6.5	44.5	5	12	5	12	0
16 FT	13	14	8	8	5	6.5	5	8.5	31.5	29.0	29.0	33.0	6	16	44.5	6	16	29.5	5	6.5	5	8.5	31.0	70	82	94	6	6.5	44.5	5	12	5	12	0
18 FT	13	15	8	8	5	6.5	5	8	31.3	29.0	29.0	33.0	6	15	44.5	6	15	29.5	5	6.5	5	8.5	30.5	71	83	95	6	6.5	44.5	5	12	5	12	0
20 FT	14	15	8	8	5	6	5	8.5	29.3	30.0	30.0	34.0	6	16	43.5	6	16	29.0	5	6	5	8.5	29.1	71	83	95	6	6.5	44.5	5	12	5	12	0
22 FT	15	16	8	8	5	6	5	8	34.1	31.0	31.0	35.0	6	15	49.5	6	15	35.0	5	6	5	8	29.1	72	84	96	6	6.5	44.5	5	12	5	12	0
24 FT	15	17	8	8	6	7.5	5	8	34.3	31.0	31.0	35.0	6	14	49.5	6	14	35.0	5	6	5	7	28.9	73	85	97	6	6.5	44.5	5	12	5	12	0
26 FT	16	18	8	8	6	8	5	7	34.1	32.0	36.0	36.0	6	14	49.0	6	14	35.0	5	6	5	6.5	29.0	74	86	98	6	6.5	44.5	5	12	5	11	0
28 FT	17	19	8	8	6	7.5	5	6.5	34.0	37.0	37.0	37.0	6	14	49.0	6	14	35.0	5	6	5	6.5	29.1	75	87	99	6	6	44.5	5	12	5	10	0
30 FT	18	20	8	8	6	7.5	5	6.5	34.0	38.0	38.0	38.0	6	13	48.5	6	13	34.0	6	8.5	5	6	29.3	76	88	100	6	6	44.5	5	12	5	9.5	0
32 FT	19	21	8	8	6	7.5	5	6	34.1	39.0	39.0	39.0	6	13	48.0	6	13	33.0	6	8.5	6	7.5	32.5	77	89	101	7	7.5	47.0	5	12	5	9.5	0
34 FT	20	21	8	8	6	7.5	6	7.5	38.0	44.0	44.0	44.0	6	12	47.5	6	12	32.5	6	7.5	6	7.5	32.6	77	89	101	7	7.5	47.0	5	12	5	9.5	0
36 FT	20	22	8	8	6	7	6	7.5	38.0	44.0	44.0	44.0	6	12	47.5	6	12	33.0	6	8	6	7	32.6	78	90	102	7	7.5	47.0	5	12	5	9.5	0
38 FT	21	23	8	8	6	7	6	7	38.1	45.0	45.0	45.0	6	12	47.0	6	12	32.0	6	7.5	6	6.5	32.8	79	91	103	7	7	47.0	5	12	5	9	0
40 FT	22	24	8	8	6	6.5	6	6.5	38.3	46.0	46.0	46.0	7	15	51.5	7	15	36.0	6	7.5	6	6	33.0	80	92	104	7	7	47.0	5	12	5	8	0
42 FT	22	24	8	8	6	6.5	6	6	38.1	46.0	46.0	46.0	7	15	51.5	7	15	36.5	6	7.5	6	6	33.0	80	92	104	7	7	47.0	5	12	5	7.5	0
44 FT	23	25	9	8	6	6.5	6	7	39.0	47.0	47.0	47.0	7	15	50.5	7	15	36.0	6	7.5	6	7	33.5	81	93	105	7	7	47.0	5	12	5	8.5	0
46 FT	24	26	9	8	6	6	6	7	39.0	48.0	48.0	48.0	7	15	49.5	7	15	35.5	6	7.5	6	6.5	33.8	82	94	106	7	7	47.0	5	12	5	8	0
48 FT	24	26	9	8	6	6	6	7	39.0	48.0	48.0	48.0	7	15	49.5	7	15	35.5	6	6.5	6	6.5	33.8	82	94	106	7	6.5	47.0	5	12	5	8	0
50 FT	25	27	9	8	6	6	6	6.5	39.0	49.0	49.0	49.0	7	15	49.0	7	15	35.5	6	7	6	6.5	34.0	83	95	107	7	6.5	47.0	5	12	5	7.5	0

SPAN (S) = 9 FT HEIGHT (HT) = 8 FT OR 9 FT OR 10 FT

DESIGN FILL	MEMBER THICKNESS				TOP SLAB BARS												BOTTOM SLAB BARS											WALL BARS				
					A1 BARS		J3 BARS						H1 BARS			H2 BARS			A2 BARS		J4 BARS					H3 BARS			B1 BARS		B2 BARS		
										K2												K3									
	TS	BS	TX	TI	SIZE	SPA.	SIZE	SPA.	C1	HT=8′	HT=9′	HT=10′	SIZE	SPA.	C5	SIZE	SPA.	C6	SIZE	SPA.	SIZE	SPA.	C4	HT=8′	HT=9′	HT=10′	SIZE	SPA.	C7	SIZE	SPA.	SIZE	SPA.	G1
1 FT	13	10	8	8	5	6.5	5	8.5	47.3	29.0	29.0	33.0	5	18	91.5	5	18	29.0	4	6	5	6	69.0	102	114	126	5	6.5	44.5	5	12	5	12	12
2 FT	13	10	8	8	5	6.5	5	8.5	47.3	29.0	29.0	33.0	5	17	91.5	5	17	28.0	5	9	6	7	66.6	102	114	126	5	6	44.0	5	12	5	12	12
4 FT	9	9	8	8	5	8.5	6	7	47.3	29.0	33.0	33.0	5	15	91.5	5	15	29.0	5	7.5	6	6	59.4	101	113	125	6	6	46.0	5	12	5	10.5	12
6 FT	9	10	9	8	5	8.5	5	6	54.1	25.0	25.0	29.0	5	14	48.0	5	14	27.5	5	8	5	6	51.8	102	114	126	6	6.5	45.5	5	12	5	11.5	12
8 FT	9	11	9	8	5	8.5	5	6	48.0	25.0	29.0	29.0	5	13	44.0	5	13	27.0	5	8	5	6	49.3	103	115	127	6	7	45.0	5	12	5	11	0
10 FT	10	11	9	8	5	8	5	6	46.6	26.0	30.0	30.0	5	12	43.0	5	12	26.5	5	7	6	7	50.0	103	115	127	6	6.5	44.5	5	12	5	10	0
12 FT	11	12	9	8	5	7.5	6	7	48.4	31.0	31.0	35.0	5	12	42.0	5	12	26.5	5	7	6	7	49.0	104	116	128	6	6.5	44.5	5	12	5	9.5	0
14 FT	12	13	9	8	5	7	6	7.5	47.4	32.0	32.0	36.0	5	12	41.5	5	12	26.5	5	6.5	6	7	48.1	105	117	129	6	6.5	44.5	5	12	5	8.5	0
16 FT	12	14	9	8	5	7	6	6.5	46.4	32.0	32.0	36.0	6	15	44.5	6	15	29.5	5	6.5	6	7	47.5	106	118	130	6	6.5	44.5	5	12	5	8.5	0
18 FT	13	15	9	8	5	6.5	6	6.5	46.0	33.0	33.0	37.0	6	15	44.0	6	15	29.0	5	6.5	6	7.5	47.3	107	119	131	6	7	44.5	5	12	5	8.5	0
20 FT	14	15	9	8	5	6.5	5	6	40.1	34.0	34.0	34.0	6	16	43.0	6	16	29.0	5	6	6	7.5	44.4	107	119	131	6	6.5	44.5	5	12	5	8.5	0
22 FT	14	16	10	8	5	6	5	6	40.5	34.0	34.0	34.0	6	15	43.0	6	15	29.0	5	6	5	7	41.5	108	120	132	6	6.5	44.5	5	12	5	8	0
24 FT	15	17	10	8	6	8	6	8	49.5	35.0	35.0	35.0	6	15	48.5	6	15	35.0	5	6	5	6.5	41.6	109	121	133	6	6.5	44.5	5	12	5	8	0
26 FT	16	18	11	8	6	8	5	6	46.1	36.0	36.0	36.0	6	15	48.0	6	15	34.5	5	6	5	7	41.9	110	122	134	6	6.5	44.5	5	12	5	7.5	0
28 FT	17	19	11	8	6	8	6	8	50.1	37.0	37.0	37.0	6	14	47.5	6	14	33.5	5	6	5	7	42.0	111	123	135	6	6	44.5	5	12	5	7.5	0
30 FT	18	20	12	8	6	8	5	6	46.8	38.0	38.0	38.0	6	13	47.0	6	13	32.5	6	8.5	5	6.5	42.4	112	124	136	6	6	44.5	5	12	5	7.5	0
32 FT	18	21	12	8	6	7.5	6	8	50.8	38.0	38.0	38.0	6	13	47.0	6	13	33.5	6	8	5	6.5	42.5	113	125	137	7	7.5	47.5	5	12	5	7	0
34 FT	19	22	12	8	6	7	6	7.5	50.9	39.0	39.0	39.0	6	13	46.0	6	13	32.5	6	8	5	6.5	42.8	114	126	138	7	7.5	47.5	5	12	5	7	0
36 FT	20	23	13	8	6	7	6	8	51.5	40.0	40.0	40.0	6	12	45.0	6	12	31.5	6	8	5	6	43.1	115	127	139	7	7	47.5	5	12	5	6.5	0
38 FT	20	23	13	8	6	6.5	6	7.5	51.4	40.0	40.0	40.0	6	12	45.0	6	12	32.0	6	7.5	5	6	43.0	115	127	139	7	7	47.5	5	12	5	6.5	0
40 FT	21	24	13	8	6	6.5	6	7	51.5	41.0	41.0	41.0	6	12	44.5	6	12	31.0	6	7.5	5	6	43.3	116	128	140	7	7	47.5	5	12	5	6.5	0
42 FT	21	25	14	8	6	6	6	7.5	52.3	41.0	41.0	41.0	6	12	44.5	6	12	31.5	6	7.5	5	6	43.5	117	129	141	7	7	47.5	5	12	5	6	0
44 FT	22	25	14	8	6	6.5	6	7	52.1	42.0	42.0	42.0	7	16	49.0	7	16	35.5	6	6.5	5	6	43.6	117	129	141	7	6.5	47.5	5	12	5	6	0
46 FT	23	26	14	8	6	6	6	7	52.1	43.0	43.0	43.0	6	12	43.5	6	12	30.5	6	7	5	6	43.9	118	130	142	7	6.5	47.5	5	12	5	6	0
48 FT	23	27	15	8	6	6	6	7	53.0	43.0	43.0	47.0	6	12	43.5	6	12	30.0	6	7	6	8.5	47.1	119	131	143	7	6.5	47.5	5	12	5	6	0
50 FT	24	28	15	8	6	6	6	7	53.0	44.0	44.0	48.0	6	12	43.0	6	12	30.0	6	7	6	8	47.5	120	132	144	7	6.5	47.5	5	12	6	8	0

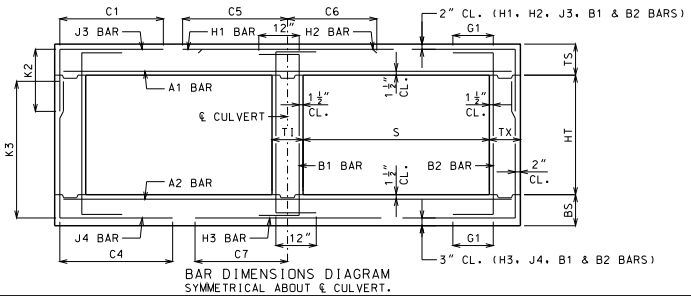

BAR DIMENSIONS DIAGRAM
SYMMETRICAL ABOUT ℄ CULVERT.

GENERAL NOTES:

IF DESIGN FILL IS BETWEEN TABULATED DESIGN FILLS, USE THE NEXT GREATER TABULATED DESIGN FILL, EXCEPT FOR DESIGN FILLS BETWEEN 2 FEET AND 4 FEET. FOR DESIGN FILLS BETWEEN 2 FEET AND 4 FEET USE THE GREATER MEMBER THICKNESS, AREA OF REINFORCEMENT AND BAR DIMENSIONS FROM THE 2 FEET AND 4 FEET TABULATED DESIGN FILLS. AREA OF REINFORCEMENT EQUALS BAR AREA PER FOOT SPACING.

SPECIAL DESIGNS ARE REQUIRED WHEN THE DESIGN FILL IS LESS THAN 1 FOOT OR GREATER THAN 50 FEET.

DIMENSIONS ARE IN INCHES UNLESS OTHERWISE SPECIFIED.

DESIGN FILLS ARE MEASURED FROM THE TOP OF TOP SLAB TO THE TOP OF EARTH FILL OR ROADWAY.

CULVERTS MEET STRENGTH AND SERVICEABILITY REQUIREMENTS FOR THE DESIGN VEHICULAR LIVE LOAD HL-93 MINUS THE LANE LOAD.

MISSOURI HIGHWAYS AND TRANSPORTATION COMMISSION
105 WEST CAPITOL
JEFFERSON CITY, MO 65102
1-888-ASK-MODOT (1-888-275-6636)

STATE OF MISSOURI
DENNIS W. HECKMAN
NUMBER PE-27141
PROFESSIONAL ENGINEER
THIS SHEET HAS BEEN SIGNED, SEALED AND DATED ELECTRONICALLY.

CONCRETE DOUBLE BOX CULVERT

MEMBER THICKNESS
BAR SIZE, SPACING & DIMENSIONS

SPAN (S): 9 FEET
HEIGHT (HT): 5 THRU 10 FEET

DATE EFFECTIVE: 10/01/2011
DATE PREPARED: 9/8/2011

703.47

SHEET NO.
12 OF 27

IF A SEAL IS PRESENT ON THIS SHEET IT HAS BEEN ELECTRONICALLY SEALED AND DATED.

SPAN (S) = 9 FT HEIGHT (HT) = 11 FT OR 12 FT																															
DESIGN FILL	MEMBER THICKNESS				TOP SLAB BARS														BOTTOM SLAB BARS										WALL BARS				
					A1 BARS		J3 BARS					H1 BARS			H2 BARS			A2 BARS		J4 BARS					H3 BARS			B1 BARS		B2 BARS		
	TS	BS	TX	TI	SIZE	SPA.	SIZE	SPA.	C1	K2 HT=11'	K2 HT=12'	SIZE	SPA.	C5	SIZE	SPA.	C6	SIZE	SPA.	SIZE	SPA.	C4	K3 HT=11'	K3 HT=12'	SIZE	SPA.	C7	SIZE	SPA.	SIZE	SPA.	G1
1 FT	13	10	9	10	5	6.5	5	8	48.3	33.0	33.0	5	17	93.0	5	17	29.0	5	9	6	6.5	79.4	138	150	5	6	44.5	5	12	5	9.5	12
2 FT	13	11	9	10	5	6.5	5	7.5	48.3	33.0	33.0	5	16	93.0	5	16	28.0	4	6	6	7	77.0	139	151	5	6	44.5	5	12	5	9	12
4 FT	9	10	9	10	5	8.5	5	6	48.3	29.0	29.0	5	15	93.0	5	15	29.0	5	8	6	6	71.4	138	150	6	7	46.5	5	12	5	8.5	12
6 FT	9	11	9	10	5	8.5	6	7	69.3	29.0	33.0	5	15	47.0	5	15	28.0	5	8.5	6	6	68.0	139	151	5	6	43.0	5	12	5	8.5	12
8 FT	9	11	9	10	5	8.5	6	6.5	61.6	29.0	33.0	5	13	44.0	5	13	27.5	5	7.5	6	6	63.8	139	151	6	7	45.5	5	12	5	8.5	0
10 FT	10	11	10	10	5	8	5	6	56.4	30.0	30.0	5	13	43.0	5	13	27.5	5	7	6	6	60.1	139	151	6	6.5	45.0	5	12	5	8	0
12 FT	11	12	10	10	5	7.5	5	6	55.0	31.0	31.0	5	13	42.5	5	13	27.0	5	6.5	6	6.5	59.1	140	152	6	6.5	45.0	5	12	5	8	0
14 FT	11	13	10	10	5	7.5	6	7	55.6	31.0	35.0	6	16	45.0	6	16	30.0	5	6.5	6	6.5	58.5	141	153	6	6.5	45.0	5	12	5	8	0
16 FT	12	14	11	10	5	7	6	8.5	54.6	32.0	36.0	6	16	44.5	6	16	30.0	5	6.5	6	7	57.4	142	154	6	6.5	45.0	5	12	5	7.5	0
18 FT	13	15	11	10	5	6.5	6	7.5	54.6	33.0	37.0	6	16	44.0	6	16	30.0	5	6.5	6	6.5	57.1	143	155	6	7	44.5	5	12	5	7.5	0
20 FT	13	15	11	10	5	6.5	6	7.5	51.5	33.0	37.0	6	15	43.5	6	15	29.5	5	6	6	6.5	53.4	143	155	6	6.5	44.5	5	12	5	7.5	0
22 FT	14	16	12	10	5	6	6	8	51.9	34.0	38.0	6	16	43.0	6	16	29.5	5	6	6	7.5	53.6	144	156	6	6.5	44.5	5	12	5	7	0
24 FT	15	17	12	10	5	6	6	7.5	58.0	35.0	39.0	6	16	48.5	6	16	35.5	5	6	6	7.5	53.8	145	157	6	6.5	44.5	5	12	5	7	0
26 FT	16	18	13	10	6	8.5	6	7.5	58.5	36.0	40.0	6	15	48.0	6	15	34.5	5	6	6	8	54.0	146	158	6	6.5	44.5	5	12	5	6.5	0
28 FT	17	19	13	10	6	8	6	7	58.6	37.0	41.0	6	14	47.5	6	14	33.5	6	8.5	6	8	54.1	147	159	6	6	44.5	5	12	5	6.5	0
30 FT	17	20	13	10	6	7.5	6	6.5	58.5	37.0	41.0	6	14	47.5	6	14	34.5	6	8	6	7	54.4	148	160	6	6	44.5	5	12	5	6.5	0
32 FT	18	21	14	10	6	7.5	6	7	59.1	38.0	42.0	6	13	47.0	6	13	33.5	6	8	6	8	54.6	149	161	7	7.5	47.5	5	12	5	6	0
34 FT	19	22	14	10	6	7.5	6	6.5	59.3	39.0	43.0	6	13	46.5	6	13	32.5	6	8	6	8	54.9	150	162	7	7.5	47.5	5	12	5	6	0
36 FT	19	22	15	10	6	7	6	6.5	59.5	43.0	43.0	6	13	46.0	6	13	33.0	6	7	6	8	54.9	150	162	7	7.5	48.0	5	12	6	8	0
38 FT	20	23	15	10	6	7	6	6.5	59.6	44.0	44.0	6	12	45.5	6	12	32.0	6	7.5	6	8	55.1	151	163	7	7	47.5	5	12	6	8	0
40 FT	20	24	16	10	6	6	6	6.5	60.0	44.0	44.0	6	12	45.0	6	12	32.5	6	7.5	6	7.5	55.5	152	164	7	7	48.0	5	12	6	8	0
42 FT	21	25	16	10	6	6.5	6	6	60.3	45.0	45.0	6	12	44.5	6	12	31.5	6	7.5	6	7.5	55.8	153	165	7	7	48.0	5	12	6	8	0
44 FT	22	25	17	10	6	6.5	6	6.5	60.8	46.0	46.0	6	12	44.0	6	12	31.0	6	6.5	6	7	55.9	153	165	7	6.5	48.0	5	12	6	7.5	0
46 FT	22	26	17	10	6	6	6	6	60.8	46.0	46.0	6	12	44.0	6	12	31.0	6	7	6	7	56.1	154	166	7	6.5	48.0	5	12	6	7.5	0
48 FT	23	27	18	10	6	6	6	6.5	61.5	47.0	47.0	6	12	43.5	6	12	31.0	6	7	6	6.5	56.6	155	167	7	6.5	48.0	5	12	6	7	0
50 FT	23	28	19	10	6	6	6	6.5	62.0	43.0	47.0	6	12	43.5	6	12	31.0	6	7	6	7	57.0	156	168	7	6.5	48.0	5	12	6	7	0

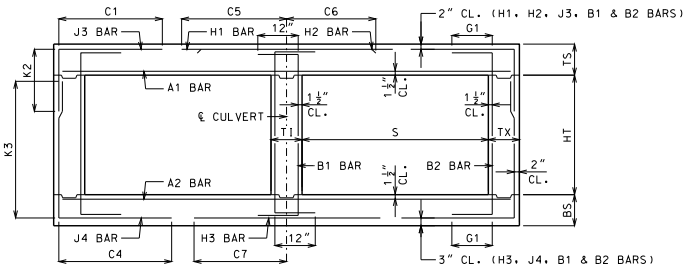

BAR DIMENSIONS DIAGRAM
SYMMETRICAL ABOUT ℄ CULVERT.

GENERAL NOTES:

IF DESIGN FILL IS BETWEEN TABULATED DESIGN FILLS, USE THE NEXT GREATER TABULATED DESIGN FILL, EXCEPT FOR DESIGN FILLS BETWEEN 2 FEET AND 4 FEET. FOR DESIGN FILLS BETWEEN 2 FEET AND 4 FEET USE THE GREATER MEMBER THICKNESS, AREA OF REINFORCEMENT AND BAR DIMENSIONS FROM THE 2 FEET AND 4 FEET TABULATED DESIGN FILLS. AREA OF REINFORCEMENT EQUALS BAR AREA PER FOOT SPACING.

SPECIAL DESIGNS ARE REQUIRED WHEN THE DESIGN FILL IS LESS THAN 1 FOOT OR GREATER THAN 50 FEET.

DIMENSIONS ARE IN INCHES UNLESS OTHERWISE SPECIFIED.

DESIGN FILLS ARE MEASURED FROM THE TOP OF TOP SLAB TO THE TOP OF EARTH FILL OR ROADWAY.

CULVERTS MEET STRENGTH AND SERVICEABILITY REQUIREMENTS FOR THE DESIGN VEHICULAR LIVE LOAD HL-93 MINUS THE LANE LOAD.

MISSOURI HIGHWAYS AND TRANSPORTATION COMMISSION
105 WEST CAPITOL
JEFFERSON CITY, MO 65102
1-888-ASK-MODOT (1-888-275-6636)

STATE OF MISSOURI
DENNIS W. HECKMANN
NUMBER PE-27141
PROFESSIONAL ENGINEER
THIS SHEET HAS BEEN SIGNED, SEALED AND DATED ELECTRONICALLY.

CONCRETE DOUBLE BOX CULVERT

MEMBER THICKNESS
BAR SIZE, SPACING & DIMENSIONS

SPAN (S): 9 FEET
HEIGHT (HT): 11 THRU 12 FEET

DATE EFFECTIVE: 10/01/2011
DATE PREPARED: 9/8/2011

703.47

SHEET NO.
13 OF 27

IF A SEAL IS PRESENT ON THIS SHEET IT HAS BEEN ELECTRONICALLY SEALED AND DATED.

SPAN (S) = 10 FT HEIGHT (HT) = 5 FT OR 6 FT OR 7 FT

DESIGN FILL	MEMBER THICKNESS				TOP SLAB BARS													BOTTOM SLAB BARS												WALL BARS				
					A1 BARS		J3 BARS						H1 BARS			H2 BARS			A2 BARS		J4 BARS					H3 BARS			B1 BARS		B2 BARS		
										K2												K3										
	TS	BS	TX	TI	SIZE	SPA.	SIZE	SPA.	C1	HT=5′	HT=6′	HT=7′	SIZE	SPA.	C5	SIZE	SPA.	C6	SIZE	SPA.	SIZE	SPA.	C4	HT=5′	HT=6′	HT=7′	SIZE	SPA.	C7	SIZE	SPA.	SIZE	SPA.	G1
1 FT	13	10	8	8	5	6.5	4	7	48.9	29.0	29.0	29.0	5	15	98.0	5	15	29.0	4	6	4	7	48.1	66	78	90	5	6	47.5	5	12	5	12	12
2 FT	13	10	8	8	5	6.5	4	7	48.9	29.0	29.0	29.0	5	13	98.0	5	13	28.5	5	8.5	4	6.5	43.8	66	78	90	6	7	50.0	5	12	5	12	12
4 FT	9	10	8	8	5	7.5	6	7.5	43.1	25.0	25.0	25.0	5	12	62.0	5	12	30.0	5	8	4	7	38.9	66	78	90	6	6.5	49.5	5	8.5	5	12	12
6 FT	9	10	8	8	5	8.5	5	6	38.0	25.0	25.0	25.0	6	15	53.5	6	15	32.0	5	7	4	6.5	36.1	66	78	90	6	6	48.5	5	12	5	12	12
8 FT	10	11	8	8	5	8	5	7.5	36.0	26.0	26.0	26.0	6	16	51.0	6	16	31.5	5	7	4	6.5	34.1	67	79	91	6	6	48.0	5	12	5	12	0
10 FT	11	12	8	8	5	7.5	5	8	34.1	27.0	27.0	27.0	6	15	49.5	6	15	31.0	5	6.5	4	6	32.6	68	80	92	6	6.5	48.0	5	12	5	12	0
12 FT	12	13	8	8	5	7	5	8.5	32.8	28.0	28.0	28.0	6	15	48.5	6	15	31.0	5	6.5	4	6	31.5	69	81	93	6	6.5	48.0	5	12	5	12	0
14 FT	13	14	8	8	5	6.5	5	8.5	31.6	29.0	29.0	33.0	6	15	48.5	6	15	31.0	5	6	5	9	30.8	70	82	94	6	6	47.5	5	12	5	12	0
16 FT	14	15	8	8	5	6	5	8.5	30.8	30.0	30.0	34.0	6	14	48.0	6	14	31.0	5	6	5	8.5	30.1	71	83	95	6	6	47.5	5	12	5	12	0
18 FT	15	16	8	8	6	8	5	8	35.1	31.0	31.0	35.0	6	14	53.5	6	14	36.5	6	8	5	8	29.9	72	84	96	6	6	47.5	5	12	5	12	0
20 FT	15	17	8	8	6	7.5	5	8	35.1	31.0	31.0	35.0	6	13	53.5	6	13	36.5	6	8	5	7	29.4	73	85	97	6	6	47.5	5	12	5	12	0
22 FT	16	18	8	8	6	8	5	7	33.4	32.0	36.0	36.0	6	13	52.5	6	13	36.5	6	8	5	6.5	28.0	74	86	98	6	6.5	47.5	5	12	5	12	0
24 FT	17	19	8	8	6	7.5	5	6.5	33.3	37.0	37.0	37.0	6	13	52.5	6	13	36.5	6	8	5	6.5	28.0	75	87	99	6	6	47.5	5	12	5	12	0
26 FT	18	20	8	8	6	7	5	6.5	33.1	38.0	38.0	38.0	6	13	52.0	6	13	36.5	6	8	5	6	28.1	76	88	100	6	6	47.5	5	12	5	10.5	0
28 FT	19	21	8	8	6	7	5	6	33.1	39.0	39.0	39.0	6	13	52.0	6	13	36.0	6	7.5	6	7.5	31.3	77	89	101	7	7.5	50.5	5	12	5	9.5	0
30 FT	20	22	8	8	6	7	6	7.5	37.1	44.0	44.0	44.0	6	12	51.5	6	12	35.5	6	7.5	6	7	31.4	78	90	102	7	7.5	50.5	5	12	5	9.5	0
32 FT	21	23	8	8	6	6.5	6	7	37.1	45.0	45.0	45.0	6	12	51.0	6	12	34.5	6	7.5	6	6.5	31.5	79	91	103	7	7	50.5	5	12	5	9.5	0
34 FT	22	23	8	8	6	6.5	6	6.5	37.0	46.0	46.0	46.0	7	15	55.5	7	15	38.5	6	6.5	6	6.5	31.6	79	91	103	7	7	50.5	5	12	5	9.5	0
36 FT	22	24	8	8	6	6	6	6.5	37.1	46.0	46.0	46.0	7	15	55.5	7	15	39.5	6	7	6	6	31.6	80	92	104	7	7	50.0	5	12	5	9	0
38 FT	23	25	8	8	6	6	6	6	37.1	47.0	47.0	47.0	7	15	55.0	7	15	38.5	6	7	6	6	31.9	81	93	105	7	6.5	50.0	5	12	5	8.5	0
40 FT	24	26	9	8	6	6	6	7	38.0	48.0	48.0	48.0	7	14	54.0	7	14	37.5	6	7	6	6.5	32.5	82	94	106	7	6.5	50.0	5	12	5	8.5	0
42 FT	25	27	9	8	6	6	6	6.5	38.0	49.0	49.0	49.0	7	14	53.5	7	14	37.0	6	7	6	6.5	32.6	83	95	107	7	6	50.0	5	12	5	8.5	0
44 FT	25	28	9	8	7	7.5	6	6.5	38.1	49.0	49.0	49.0	7	14	53.0	7	14	37.5	6	6.5	6	6	32.8	84	96	108	7	6	50.0	5	12	5	8.5	0
46 FT	26	28	9	8	7	7.5	6	6.5	38.1	50.0	50.0	50.0	7	13	52.5	7	13	36.5	6	6.5	6	6	32.9	84	96	108	7	6	50.0	5	12	5	8	0
48 FT	27	29	9	8	7	7.5	6	6	38.1	51.0	51.0	51.0	7	14	51.5	7	14	36.5	6	6.5	6	6	33.0	85	97	109	7	6	50.0	5	12	5	7.5	0
50 FT	27	30	10	8	7	7	6	7	39.0	51.0	51.0	51.0	7	13	51.5	7	13	36.0	6	6.5	6	6.5	33.5	86	98	110	7	6	50.0	5	12	5	8	0

SPAN (S) = 10 FT HEIGHT (HT) = 8 FT OR 9 FT OR 10 FT

DESIGN FILL	MEMBER THICKNESS				TOP SLAB BARS													BOTTOM SLAB BARS												WALL BARS				
					A1 BARS		J3 BARS						H1 BARS			H2 BARS			A2 BARS		J4 BARS					H3 BARS			B1 BARS		B2 BARS		
										K2												K3										
	TS	BS	TX	TI	SIZE	SPA.	SIZE	SPA.	C1	HT=8′	HT=9′	HT=10′	SIZE	SPA.	C5	SIZE	SPA.	C6	SIZE	SPA.	SIZE	SPA.	C4	HT=8′	HT=9′	HT=10′	SIZE	SPA.	C7	SIZE	SPA.	SIZE	SPA.	G1
1 FT	13	10	8	8	5	6.5	5	8.5	50.9	29.0	33.0	33.0	5	14	100.0	5	14	29.5	5	8.5	6	7.5	71.6	102	114	126	5	6	47.5	5	12	5	12	12
2 FT	13	11	8	8	5	6.5	5	8.5	50.9	29.0	33.0	33.0	5	13	100.0	5	13	28.5	5	8.5	5	6	64.1	103	115	127	5	6	47.0	5	12	5	12	12
4 FT	9	10	9	8	5	7.5	5	6	69.0	25.0	25.0	29.0	5	12	73.0	5	12	30.0	5	7.5	5	6	55.4	102	114	126	6	6.5	49.5	5	10	5	12	12
6 FT	9	10	9	8	5	8.5	5	6	51.4	25.0	29.0	29.0	6	15	54.0	6	15	32.0	5	7	6	7	53.4	102	114	126	6	6	48.5	5	12	5	12	12
8 FT	10	11	9	8	5	8	5	6	48.0	26.0	30.0	30.0	5	12	48.0	5	12	28.5	5	7	6	7.5	50.9	103	115	127	6	6	48.0	5	12	5	11.5	0
10 FT	11	12	9	8	5	7.5	5	6	46.0	31.0	31.0	31.0	6	16	49.5	6	16	31.0	5	6.5	5	6	46.3	104	116	128	6	6	48.0	5	12	5	10.5	0
12 FT	12	13	9	8	5	7	5	6	44.5	32.0	32.0	32.0	6	15	48.5	6	15	31.0	5	6.5	5	6	45.0	105	117	129	6	6	47.5	5	12	5	9.5	0
14 FT	13	14	9	8	5	6.5	5	6	43.3	33.0	33.0	33.0	6	15	48.0	6	15	30.5	5	6	5	6	43.9	106	118	130	6	6	47.5	5	12	5	8.5	0
16 FT	14	15	9	8	5	6	5	6	42.1	34.0	34.0	34.0	6	15	47.5	6	15	30.5	5	6	5	6	43.0	107	119	131	6	6	47.5	5	12	5	8.5	0
18 FT	15	16	10	8	6	8.5	5	6.5	47.1	35.0	35.0	35.0	6	15	53.0	6	15	36.5	6	8	5	7	42.8	108	120	132	6	6	47.5	5	12	5	8.5	0
20 FT	15	17	10	8	6	8	6	8	50.6	35.0	35.0	35.0	6	13	52.5	6	13	36.5	6	8	5	6.5	42.3	109	121	133	6	6	47.5	5	12	5	8	0
22 FT	16	18	10	8	6	8	5	6	44.5	36.0	36.0	36.0	6	14	52.0	6	14	36.0	6	8	5	7	40.0	110	122	134	6	6.5	47.5	5	12	5	8	0
24 FT	17	19	10	8	6	7.5	6	8	48.4	37.0	37.0	37.0	6	14	51.5	6	14	36.0	6	8	5	6.5	40.1	111	123	135	6	6	47.5	5	12	5	8	0
26 FT	18	20	11	8	6	7.5	5	6	45.0	38.0	38.0	38.0	6	13	51.0	6	13	35.5	6	7.5	5	7	40.5	112	124	136	6	6	47.5	5	12	5	7.5	0
28 FT	19	21	11	8	6	7	6	8	49.0	39.0	39.0	39.0	6	13	50.5	6	13	35.0	6	7.5	5	7	40.5	113	125	137	7	7.5	50.5	5	12	5	7.5	0
30 FT	19	22	12	8	6	6.5	6	8	49.8	39.0	39.0	39.0	6	13	50.0	6	13	35.5	6	7.5	5	6.5	40.9	114	126	138	7	7.5	50.5	5	12	5	7.5	0
32 FT	20	23	12	8	6	6.5	6	8	49.6	40.0	40.0	40.0	6	12	49.5	6	12	34.5	6	7.5	5	6.5	41.0	115	127	139	7	7	50.5	5	12	5	7	0
34 FT	21	24	12	8	6	6.5	6	7.5	49.6	41.0	41.0	41.0	6	12	49.0	6	12	33.5	6	7.5	5	6.5	41.1	116	128	140	7	7	50.5	5	12	5	7	0
36 FT	22	25	12	8	6	6.5	6	6.5	49.6	42.0	42.0	42.0	7	15	53.0	7	15	38.0	6	7	5	6.5	41.3	117	129	141	7	6.5	50.5	5	12	5	7	0
38 FT	23	26	13	8	6	6	6	7.5	50.4	43.0	43.0	43.0	7	15	52.0	7	15	37.0	6	7	5	6	41.8	118	130	142	7	6.5	50.5	5	12	5	6.5	0
40 FT	23	26	13	8	6	6	6	7	50.3	43.0	43.0	43.0	7	15	52.0	7	15	37.5	6	6.5	5	6	41.6	118	130	142	7	6.5	50.5	5	12	5	6.5	0
42 FT	24	27	14	8	6	6	6	7.5	51.0	44.0	44.0	44.0	7	14	51.5	7	14	36.5	6	6.5	5	6	42.1	119	131	143	7	6	50.5	5	12	5	6	0
44 FT	24	28	14	8	7	7	6	7	51.1	44.0	44.0	44.0	7	14	51.5	7	14	37.0	6	6.5	5	6	42.1	120	132	144	7	6	50.5	5	12	5	6	0
46 FT	25	29	14	8	7	7.5	6	6.5	51.1	45.0	49.0	49.0	7	14	51.0	7	14	36.0	6	6.5	6	8.5	45.4	121	133	145	7	6	50.5	5	12	5	6	0
48 FT	26	30	14	8	7	7	6	6	51.1	46.0	50.0	50.0	7	15	50.5	7	15	36.0	6	6.5	6	8	45.6	122	134	146	7	6	50.5	5	12	5	6	0
50 FT	26	30	15	8	7	7	6	6.5	51.9	50.0	50.0	50.0	7	14	50.5	7	14	36.0	6	6	6	8	45.8	122	134	146	8	7.5	56.5	5	12	6	8	0

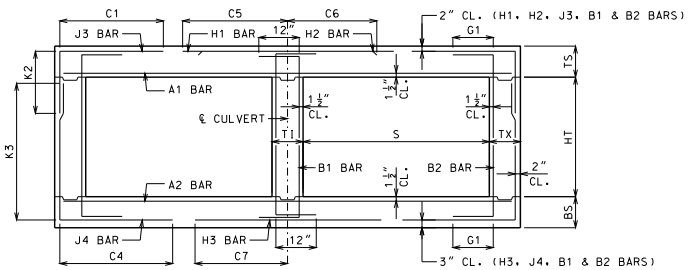

BAR DIMENSIONS DIAGRAM
SYMMETRICAL ABOUT ℄ CULVERT.

GENERAL NOTES:

IF DESIGN FILL IS BETWEEN TABULATED DESIGN FILLS, USE THE NEXT GREATER TABULATED DESIGN FILL, EXCEPT FOR DESIGN FILLS BETWEEN 2 FEET AND 4 FEET. FOR DESIGN FILLS BETWEEN 2 FEET AND 4 FEET USE THE GREATER MEMBER THICKNESS, AREA OF REINFORCEMENT AND BAR DIMENSIONS FROM THE 2 FEET AND 4 FEET TABULATED DESIGN FILLS. AREA OF REINFORCEMENT EQUALS BAR AREA PER FOOT SPACING.

SPECIAL DESIGNS ARE REQUIRED WHEN THE DESIGN FILL IS LESS THAN 1 FOOT OR GREATER THAN 50 FEET.

DIMENSIONS ARE IN INCHES UNLESS OTHERWISE SPECIFIED.

DESIGN FILLS ARE MEASURED FROM THE TOP OF TOP SLAB TO THE TOP OF EARTH FILL OR ROADWAY.

CULVERTS MEET STRENGTH AND SERVICEABILITY REQUIREMENTS FOR THE DESIGN VEHICULAR LIVE LOAD HL-93 MINUS THE LANE LOAD.

MISSOURI HIGHWAYS AND TRANSPORTATION COMMISSION
105 WEST CAPITOL
JEFFERSON CITY, MO 65102
1-888-ASK-MODOT (1-888-275-6636)

STATE OF MISSOURI
DENNIS W. HECKMANN
NUMBER PE-27141
PROFESSIONAL ENGINEER
THIS SHEET HAS BEEN SIGNED, SEALED AND DATED ELECTRONICALLY.

CONCRETE DOUBLE BOX CULVERT

MEMBER THICKNESS
BAR SIZE, SPACING & DIMENSIONS

SPAN (S): 10 FEET
HEIGHT (HT): 5 THRU 10 FEET

DATE EFFECTIVE: 10/01/2011
DATE PREPARED: 9/8/2011

703.47

SHEET NO.
14 OF 27

IF A SEAL IS PRESENT ON THIS SHEET IT HAS BEEN ELECTRONICALLY SEALED AND DATED.

SPAN (S) = 10 FT HEIGHT (HT) = 11 FT OR 12 FT OR 13 FT

DESIGN FILL	MEMBER THICKNESS				TOP SLAB BARS														BOTTOM SLAB BARS														WALL BARS				
					A1 BARS		J3 BARS						H1 BARS			H2 BARS			A2 BARS		J4 BARS						H3 BARS			B1 BARS		B2 BARS		
										K2													K3											
	TS	BS	TX	TI	SIZE	SPA.	SIZE	SPA.	C1	HT=11'	HT=12'	HT=13'	SIZE	SPA.	C5	SIZE	SPA.	C6	SIZE	SPA.	SIZE	SPA.	C4	HT=11'	HT=12'	HT=13'	SIZE	SPA.	C7	SIZE	SPA.	SIZE	SPA.	G1
1 FT	13	10	9	10	5	6.5	5	6.5	51.9	33.0	33.0	33.0	5	14	101.0	5	14	30.0	5	7.5	6	6	85.4	138	150	162	6	7	51.0	5	12	5	8.5	12
2 FT	13	11	9	10	5	6.5	5	6	51.9	33.0	33.0	33.0	5	13	101.0	5	13	29.0	5	8	6	6	82.6	139	151	163	6	6	47.5	5	12	5	8.5	12
4 FT	9	10	10	10	5	7.5	6	7	52.5	29.0	29.0	33.0	5	12	101.5	5	12	30.5	5	7	6	6	74.5	138	150	162	6	6	50.0	5	10	5	8	12
6 FT	9	11	10	10	5	8.5	6	7	70.4	29.0	29.0	33.0	5	12	50.5	5	12	29.5	5	7	6	6	71.0	139	151	163	6	6.5	49.5	5	12	5	8	12
8 FT	10	12	11	10	5	8	5	6	62.6	30.0	30.0	30.0	5	12	47.5	5	12	29.0	5	7	5	6	64.6	140	152	164	6	6.5	48.5	5	12	5	7.5	0
10 FT	11	12	11	10	5	7.5	5	6.5	60.9	31.0	31.0	31.0	5	12	46.5	5	12	28.5	5	6.5	6	6.5	64.4	140	152	164	6	6	48.0	5	12	5	7.5	0
12 FT	11	13	11	10	5	7.5	6	7.5	60.6	31.0	31.0	35.0	6	15	48.5	6	15	31.5	5	6	6	6.5	63.6	141	153	165	6	6	48.0	5	12	5	7.5	0
14 FT	12	14	11	10	5	7	6	7.5	59.6	32.0	32.0	36.0	6	14	48.0	6	14	31.5	5	6	6	6.5	62.5	142	154	166	6	6	48.0	5	12	5	7.5	0
16 FT	13	15	12	10	5	6.5	6	7.5	58.4	33.0	33.0	37.0	6	14	47.5	6	14	31.0	6	8	6	7	61.1	143	155	167	6	6	48.0	5	12	5	7	0
18 FT	14	16	12	10	5	6	6	7	58.0	34.0	38.0	38.0	6	14	47.0	6	14	31.0	6	8	6	6.5	60.5	144	156	168	6	6.5	48.0	5	12	5	7	0
20 FT	15	17	13	10	6	8	6	7	64.0	35.0	39.0	39.0	6	14	52.5	6	14	37.0	6	8	6	6.5	59.9	145	157	169	6	6.5	48.0	5	12	5	6.5	0
22 FT	15	18	13	10	6	7.5	6	7	61.1	35.0	35.0	39.0	6	13	52.0	6	13	37.0	6	8	6	7.5	57.4	146	158	170	6	6.5	48.0	5	12	5	6.5	0
24 FT	16	19	13	10	6	7.5	6	6.5	61.3	36.0	36.0	40.0	6	13	51.5	6	13	36.5	6	7.5	6	7.5	57.4	147	159	171	6	6	48.0	5	12	5	6.5	0
26 FT	17	20	14	10	6	7.5	6	7	61.8	37.0	37.0	41.0	6	13	51.5	6	13	36.5	6	7.5	6	7.5	57.6	148	160	172	6	6	48.0	5	12	5	6	0
28 FT	18	21	14	10	6	7	6	6.5	61.9	38.0	38.0	42.0	6	13	51.0	6	13	36.5	6	7.5	6	7.5	57.8	149	161	173	7	7.5	51.0	5	12	5	6	0
30 FT	19	22	15	10	6	7	6	6.5	62.4	39.0	43.0	43.0	6	13	50.0	6	13	35.5	6	7.5	6	7.5	58.0	150	162	174	7	7.5	51.0	5	12	6	8	0
32 FT	20	23	15	10	6	7	6	6	62.5	44.0	44.0	44.0	6	12	49.5	6	12	34.5	6	7	6	7.5	58.1	151	163	175	7	7	51.0	5	12	6	8	0
34 FT	21	24	16	10	6	6.5	6	6.5	63.0	41.0	45.0	45.0	6	12	48.5	6	12	33.5	6	7	6	7.5	58.5	152	164	176	7	7	51.0	5	12	6	8	0
36 FT	21	25	16	10	6	6	6	6	62.9	45.0	45.0	45.0	6	12	48.5	6	12	34.0	6	7	6	7.5	58.6	153	165	177	7	6.5	51.0	5	12	6	8	0
38 FT	22	26	17	10	6	6.5	6	6	63.5	42.0	46.0	46.0	7	15	52.5	7	15	38.5	6	7	6	7	59.0	154	166	178	7	6.5	51.0	5	12	6	7.5	0
40 FT	23	26	17	10	6	6	6	6	63.5	47.0	47.0	47.0	7	15	52.0	7	15	37.5	6	6	6	7	58.9	154	166	178	7	6.5	51.0	5	12	6	7.5	0
42 FT	24	27	18	10	6	6	6	6	64.1	44.0	48.0	48.0	7	15	51.5	7	15	37.0	6	6.5	6	6.5	59.3	155	167	179	7	6	51.0	5	12	6	7	0
44 FT	24	28	19	10	7	8	6	6	64.6	44.0	48.0	48.0	7	14	51.5	7	14	37.0	6	6.5	6	6.5	59.6	156	168	180	7	6	51.0	5	12	6	7	0
46 FT	25	29	19	10	7	7.5	6	6	64.8	49.0	49.0	49.0	7	15	51.0	7	15	36.5	6	6.5	6	6.5	59.9	157	169	181	7	6	51.0	5	12	6	6.5	0
48 FT	25	30	20	10	7	7.5	7	8	70.3	49.0	49.0	49.0	7	15	51.0	7	15	36.5	6	6.5	6	6.5	60.3	158	170	182	7	6	51.0	5	12	6	6.5	0
50 FT	26	31	20	10	7	7	7	7	70.4	50.0	50.0	50.0	7	15	50.5	7	15	36.5	6	6	6	6	60.5	159	171	183	7	6	51.0	5	12	6	6.5	0

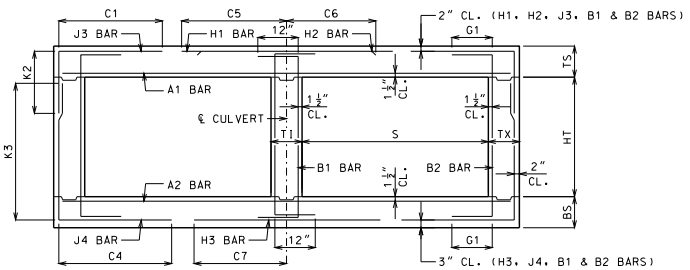

BAR DIMENSIONS DIAGRAM
SYMMETRICAL ABOUT ℄ CULVERT.

GENERAL NOTES:

IF DESIGN FILL IS BETWEEN TABULATED DESIGN FILLS, USE THE NEXT GREATER TABULATED DESIGN FILL, EXCEPT FOR DESIGN FILLS BETWEEN 2 FEET AND 4 FEET. FOR DESIGN FILLS BETWEEN 2 FEET AND 4 FEET USE THE GREATER MEMBER THICKNESS, AREA OF REINFORCEMENT AND BAR DIMENSIONS FROM THE 2 FEET AND 4 FEET TABULATED DESIGN FILLS. AREA OF REINFORCEMENT EQUALS BAR AREA PER FOOT SPACING.

SPECIAL DESIGNS ARE REQUIRED WHEN THE DESIGN FILL IS LESS THAN 1 FOOT OR GREATER THAN 50 FEET.

DIMENSIONS ARE IN INCHES UNLESS OTHERWISE SPECIFIED.

DESIGN FILLS ARE MEASURED FROM THE TOP OF TOP SLAB TO THE TOP OF EARTH FILL OR ROADWAY.

CULVERTS MEET STRENGTH AND SERVICEABILITY REQUIREMENTS FOR THE DESIGN VEHICULAR LIVE LOAD HL-93 MINUS THE LANE LOAD.

MISSOURI HIGHWAYS AND TRANSPORTATION COMMISSION
105 WEST CAPITOL
JEFFERSON CITY, MO 65102
1-888-ASK-MODOT (1-888-275-6636)

STATE OF MISSOURI
DENNIS W. HECKMANN
NUMBER PE-27141
PROFESSIONAL ENGINEER
THIS SHEET HAS BEEN SIGNED, SEALED AND DATED ELECTRONICALLY.

CONCRETE DOUBLE BOX CULVERT

MEMBER THICKNESS
BAR SIZE, SPACING & DIMENSIONS

SPAN (S): 10 FEET
HEIGHT (HT): 11 THRU 13 FEET

DATE EFFECTIVE: 10/01/2011
DATE PREPARED: 9/8/2011

703.47

SHEET NO.
15 OF 27

IF A SEAL IS PRESENT ON THIS SHEET IT HAS BEEN ELECTRONICALLY SEALED AND DATED.

SPAN (S) = 11 FT HEIGHT (HT) = 6 FT OR 7 FT OR 8 FT

DESIGN FILL	MEMBER THICKNESS				TOP SLAB BARS												BOTTOM SLAB BARS										WALL BARS				
					A1 BARS		J3 BARS			K2			H1 BARS			H2 BARS			A2 BARS		J4 BARS			K3			H3 BARS			B1 BARS		B2 BARS	
	TS	BS	TX	TI	SIZE	SPA.	SIZE	SPA.	C1	HT=6′	HT=7′	HT=8′	SIZE	SPA.	C5	SIZE	SPA.	C6	SIZE	SPA.	SIZE	SPA.	C4	HT=6′	HT=7′	HT=8′	SIZE	SPA.	C7	SIZE	SPA.	SIZE	SPA.	G1
1 FT	14	10	8	8	5	6	4	6.5	52.5	30.0	30.0	30.0	5	13	106.5	5	13	30.0	5	8	5	7	52.9	78	90	102	6	7	53.5	5	12	5	12	12
2 FT	14	11	8	8	5	6	4	6	52.5	30.0	30.0	30.0	5	12	106.5	5	12	29.0	5	8	5	8	49.1	79	91	103	6	7	53.0	5	12	5	12	12
4 FT	10	10	8	8	5	7	5	6	45.6	26.0	26.0	30.0	6	16	72.5	6	16	35.0	5	7	5	6.5	43.0	78	90	102	6	6	52.5	5	10.5	5	12	12
6 FT	10	11	8	8	5	7.5	5	6	40.8	26.0	26.0	30.0	6	15	58.5	6	15	33.5	5	6.5	5	7.5	39.5	79	91	103	6	6	52.0	5	12	5	12	12
8 FT	11	12	8	8	5	7.5	5	7	38.6	27.0	27.0	31.0	6	15	54.5	6	15	33.0	5	6.5	5	8	37.3	80	92	104	6	6	51.5	5	12	5	12	0
10 FT	12	13	8	8	5	7	5	7.5	36.6	28.0	28.0	32.0	6	14	53.0	6	14	32.5	5	6	5	8	35.6	81	93	105	6	6	51.0	5	12	5	12	0
12 FT	13	14	8	8	5	6.5	5	7.5	35.3	29.0	33.0	33.0	6	14	52.0	6	14	32.5	6	8.5	5	8.5	34.6	82	94	106	6	6	51.0	5	12	5	12	0
14 FT	14	15	8	8	5	6	5	8	34.1	30.0	34.0	34.0	6	13	51.5	6	13	32.0	6	8	5	8.5	33.8	83	95	107	6	6	51.0	5	12	5	12	0
16 FT	15	16	8	8	6	8	5	7.5	38.3	31.0	35.0	35.0	6	13	57.0	6	13	38.0	6	7.5	5	8	33.1	84	96	108	6	6	51.0	5	12	5	12	0
18 FT	16	17	8	8	6	8	5	7	37.5	32.0	36.0	36.0	6	12	56.5	6	12	38.0	6	7	5	7	32.6	85	97	109	7	7	53.5	5	12	5	10.5	0
20 FT	17	18	8	8	6	7.5	5	6.5	37.1	37.0	37.0	37.0	6	12	56.5	6	12	38.0	6	7	5	6.5	32.4	86	98	110	7	7	53.5	5	12	5	9.5	0
22 FT	18	20	8	8	6	7	5	6.5	37.1	38.0	38.0	38.0	6	12	56.0	6	12	37.5	6	7.5	5	6	32.4	88	100	112	6	6	50.5	5	12	5	9.5	0
24 FT	19	20	8	8	6	6.5	5	6	35.1	39.0	39.0	39.0	6	12	55.0	6	12	37.5	6	7	5	6	30.9	88	100	112	6	6	50.5	5	12	5	9.5	0
26 FT	20	21	8	8	6	6.5	6	7.5	39.1	44.0	44.0	44.0	6	12	54.5	6	12	37.5	6	6.5	6	7.5	33.9	89	101	113	7	7	53.5	5	12	5	9.5	0
28 FT	21	22	8	8	6	6.5	6	7	39.1	45.0	45.0	45.0	6	12	54.5	6	12	37.0	6	6	6	7	34.0	90	102	114	7	7	53.5	5	12	5	9.5	0
30 FT	22	23	8	8	6	6	6	6.5	39.1	46.0	46.0	46.0	7	15	59.0	7	15	41.0	6	6	6	6.5	34.1	91	103	115	7	7	53.5	5	12	5	8.5	0
32 FT	23	24	8	8	6	6	6	6	39.1	47.0	47.0	47.0	7	15	58.5	7	15	40.5	6	6	6	6	34.3	92	104	116	7	7	53.5	5	12	5	8	0
34 FT	23	26	9	8	7	7.5	6	7	40.3	47.0	47.0	47.0	7	15	58.0	7	15	41.0	6	6.5	6	6.5	34.8	94	106	118	7	6.5	53.5	5	12	5	8.5	0
36 FT	24	27	9	8	7	7.5	6	7	40.3	48.0	48.0	48.0	7	14	57.5	7	14	40.5	6	6.5	6	6.5	34.9	95	107	119	7	6	53.5	5	12	5	8	0
38 FT	25	27	9	8	7	7.5	6	6.5	40.1	49.0	49.0	49.0	7	14	57.0	7	14	39.5	6	6	6	6.5	35.0	95	107	119	7	6	53.5	5	12	5	7.5	0
40 FT	26	28	10	8	7	7.5	6	7	40.9	50.0	50.0	50.0	7	13	56.0	7	13	38.5	6	6	6	7	35.5	96	108	120	7	6	53.5	5	12	5	8	0
42 FT	27	29	10	8	7	7	6	7	41.0	51.0	51.0	51.0	7	13	55.0	7	13	37.5	6	6	6	6.5	35.8	97	109	121	8	7.5	59.5	5	12	5	8	0
44 FT	27	30	11	8	7	6.5	5	6	37.9	47.0	47.0	47.0	7	13	54.5	7	13	38.0	6	6	6	7	36.1	98	110	122	8	7.5	59.5	5	12	5	7.5	0
46 FT	28	31	11	8	7	6.5	6	7.5	41.9	52.0	52.0	52.0	7	12	54.0	7	12	37.5	6	6	6	7	36.4	99	111	123	8	7	59.5	5	12	5	7.5	0
48 FT	29	32	11	8	7	6.5	6	7	41.9	53.0	53.0	53.0	7	12	53.5	7	12	37.0	6	6	6	6.5	36.5	100	112	124	8	7	59.0	5	12	5	7.5	0
50 FT	29	33	11	8	7	6.5	6	7	42.0	53.0	53.0	53.0	7	12	53.5	7	12	37.0	6	6	6	6.5	36.6	101	113	125	8	7	59.0	5	12	5	7	0

SPAN (S) = 11 FT HEIGHT (HT) = 9 FT OR 10 FT OR 11 FT

DESIGN FILL	MEMBER THICKNESS				TOP SLAB BARS												BOTTOM SLAB BARS										WALL BARS				
					A1 BARS		J3 BARS			K2			H1 BARS			H2 BARS			A2 BARS		J4 BARS			K3			H3 BARS			B1 BARS		B2 BARS	
	TS	BS	TX	TI	SIZE	SPA.	SIZE	SPA.	C1	HT=9′	HT=10′	HT=11′	SIZE	SPA.	C5	SIZE	SPA.	C6	SIZE	SPA.	SIZE	SPA.	C4	HT=9′	HT=10′	HT=11′	SIZE	SPA.	C7	SIZE	SPA.	SIZE	SPA.	G1
1 FT	14	10	8	9	5	6	5	8	54.6	34.0	34.0	34.0	5	13	109.0	5	13	30.5	5	7.5	6	6	76.4	114	126	138	6	6.5	54.0	5	12	5	10	12
2 FT	14	11	8	9	5	6	5	8	54.6	34.0	34.0	34.0	5	12	109.0	5	12	29.5	5	7.5	6	6.5	71.8	115	127	139	6	7	53.5	5	12	5	10	12
4 FT	10	10	9	9	5	7	5	6	82.4	30.0	30.0	30.0	6	16	84.0	6	16	35.0	5	7	6	6.5	62.1	114	126	138	7	7	55.5	5	10.5	5	10	12
6 FT	10	11	9	9	5	7.5	5	6	56.3	30.0	30.0	30.0	6	15	58.5	6	15	33.5	5	6.5	6	6.5	58.1	115	127	139	6	6	52.0	5	12	5	9.5	12
8 FT	11	12	10	9	5	7.5	5	6	52.4	31.0	31.0	31.0	6	15	54.5	6	15	33.0	5	6	5	6	52.1	116	128	140	6	6	51.5	5	12	5	10.5	0
10 FT	11	13	10	9	5	7.5	5	6	49.6	31.0	31.0	31.0	6	14	52.5	6	14	32.5	5	6	5	6	50.5	117	129	141	6	6	51.5	5	12	5	9.5	0
12 FT	12	14	10	9	5	6.5	5	6	48.1	32.0	32.0	32.0	6	13	52.0	6	13	32.5	6	8	5	6	49.0	118	130	142	6	6	51.0	5	12	5	9	0
14 FT	14	15	10	9	5	6	5	6	47.1	34.0	34.0	34.0	6	14	51.5	6	14	32.5	6	8	5	6	47.9	119	131	143	6	6	51.0	5	12	5	8	0
16 FT	15	16	10	9	6	8	6	8	55.0	35.0	35.0	35.0	6	13	57.0	6	13	38.5	6	7.5	5	6	46.9	120	132	144	6	6	51.0	5	12	5	8	0
18 FT	16	17	10	9	6	8	6	7.5	53.9	36.0	36.0	40.0	6	13	56.5	6	13	38.0	6	7	6	7	49.0	121	133	145	6	6	51.0	5	12	5	8	0
20 FT	17	18	11	9	6	7.5	6	8	54.0	37.0	37.0	37.0	6	13	56.0	6	13	38.0	6	6.5	5	6	45.9	122	134	146	6	6	51.0	5	12	5	7.5	0
22 FT	18	20	12	9	6	7	6	8	54.4	38.0	38.0	38.0	6	13	55.5	6	13	38.0	6	7.5	5	6.5	46.0	124	136	148	6	6	51.0	5	12	5	7	0
24 FT	18	20	12	9	6	7	6	8	52.1	38.0	38.0	38.0	6	12	54.5	6	12	37.5	6	6.5	5	6.5	43.5	124	136	148	6	6	51.0	5	12	5	7.5	0
26 FT	19	22	12	9	6	6.5	6	7.5	52.1	39.0	39.0	39.0	6	12	54.5	6	12	37.5	6	7	5	6.5	43.6	126	138	150	7	7.5	54.0	5	12	5	7	0
28 FT	20	23	12	9	6	6.5	6	7	52.1	40.0	40.0	40.0	6	12	54.0	6	12	37.5	6	7	5	6	43.8	127	139	151	7	7	54.0	5	12	5	7	0
30 FT	21	24	13	9	6	6	6	7.5	52.8	41.0	41.0	41.0	6	12	53.0	6	12	37.0	6	6.5	5	6	44.1	128	140	152	7	7	54.0	5	12	5	6.5	0
32 FT	22	25	13	9	6	6	6	7	52.8	42.0	42.0	42.0	7	15	56.5	7	15	41.0	6	6.5	5	6	44.3	129	141	153	7	6.5	54.0	5	12	5	6.5	0
34 FT	23	26	13	9	6	6	6	6.5	52.8	43.0	43.0	43.0	7	15	57.0	7	15	40.0	6	6.5	5	6	44.4	130	142	154	7	6.5	54.0	5	12	5	6.5	0
36 FT	24	27	14	9	7	8	6	7	53.4	44.0	44.0	44.0	7	14	56.0	7	14	39.5	6	6.5	5	6	44.8	131	143	155	7	6	54.0	5	12	5	6	0
38 FT	25	28	14	9	7	7.5	6	7	53.4	45.0	45.0	45.0	7	14	55.0	7	14	38.5	6	6.5	5	6	44.9	132	144	156	7	6	54.0	5	12	5	6	0
40 FT	25	29	14	9	7	7	6	6	53.4	45.0	49.0	49.0	7	14	55.0	7	14	39.0	6	6	6	8.5	47.9	133	145	157	8	7.5	60.0	5	12	5	6	0
42 FT	26	30	15	9	7	7	6	6.5	54.1	50.0	50.0	50.0	7	13	54.0	7	13	38.0	6	6	6	8	48.4	134	146	158	8	7.5	60.0	5	12	6	8	0
44 FT	27	31	15	9	7	7	6	6.5	54.1	51.0	51.0	51.0	7	13	54.0	7	13	37.0	6	6	6	7.5	48.6	135	147	159	8	7	60.0	5	12	6	8	0
46 FT	27	32	16	9	7	6.5	6	6.5	55.0	51.0	51.0	51.0	7	13	53.5	7	13	37.5	6	6	6	7.5	48.9	136	148	160	8	7	60.0	5	12	6	8	0
48 FT	28	32	16	9	7	6.5	6	6	54.9	52.0	52.0	52.0	7	13	53.0	7	13	37.0	7	8	6	7.5	49.0	136	148	160	8	7	60.0	5	12	6	8	0
50 FT	29	33	17	9	7	6.5	6	6.5	55.6	53.0	53.0	53.0	7	13	52.5	7	13	37.0	7	7.5	6	7	49.5	137	149	161	8	7	60.0	5	12	6	7.5	0

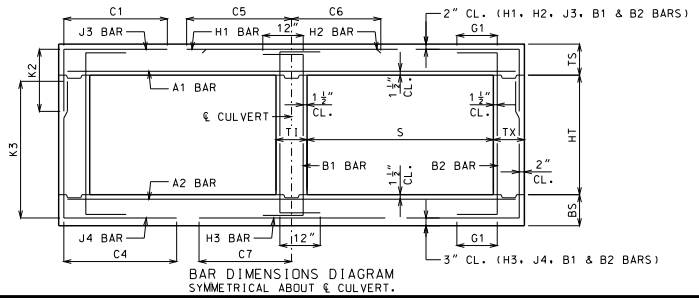

BAR DIMENSIONS DIAGRAM
SYMMETRICAL ABOUT ℄ CULVERT.

GENERAL NOTES:

IF DESIGN FILL IS BETWEEN TABULATED DESIGN FILLS, USE THE NEXT GREATER TABULATED DESIGN FILL, EXCEPT FOR DESIGN FILLS BETWEEN 2 FEET AND 4 FEET. FOR DESIGN FILLS BETWEEN 2 FEET AND 4 FEET USE THE GREATER MEMBER THICKNESS, AREA OF REINFORCEMENT AND BAR DIMENSIONS FROM THE 2 FEET AND 4 FEET TABULATED DESIGN FILLS. AREA OF REINFORCEMENT EQUALS BAR AREA PER FOOT SPACING.

SPECIAL DESIGNS ARE REQUIRED WHEN THE DESIGN FILL IS LESS THAN 1 FOOT OR GREATER THAN 50 FEET.

DIMENSIONS ARE IN INCHES UNLESS OTHERWISE SPECIFIED.

DESIGN FILLS ARE MEASURED FROM THE TOP OF TOP SLAB TO THE TOP OF EARTH FILL OR ROADWAY.

CULVERTS MEET STRENGTH AND SERVICEABILITY REQUIREMENTS FOR THE DESIGN VEHICULAR LIVE LOAD HL-93 MINUS THE LANE LOAD.

MISSOURI HIGHWAYS AND TRANSPORTATION COMMISSION
105 WEST CAPITOL
JEFFERSON CITY, MO 65102
1-888-ASK-MODOT (1-888-275-6636)

STATE OF MISSOURI
DENNIS W. HECKMANN
NUMBER PE-27141
PROFESSIONAL ENGINEER
THIS SHEET HAS BEEN SIGNED, SEALED AND DATED ELECTRONICALLY.

CONCRETE DOUBLE BOX CULVERT

MEMBER THICKNESS
BAR SIZE, SPACING & DIMENSIONS

SPAN (S): 11 FEET
HEIGHT (HT): 6 THRU 11 FEET

DATE EFFECTIVE: 10/01/2011
DATE PREPARED: 9/8/2011

703.47

SHEET NO.
16 OF 27

IF A SEAL IS PRESENT ON THIS SHEET IT HAS BEEN ELECTRONICALLY SEALED AND DATED.

SPAN (S) = 11 FT HEIGHT (HT) = 12 FT OR 13 FT OR 14 FT

DESIGN FILL	MEMBER THICKNESS				TOP SLAB BARS														BOTTOM SLAB BARS													WALL BARS				
					A1 BARS		J3 BARS						H1 BARS			H2 BARS			A2 BARS		J4 BARS					H3 BARS			B1 BARS		B2 BARS		
										K2													K3									
	TS	BS	TX	TI	SIZE	SPA.	SIZE	SPA.	C1	HT=12'	HT=13'	HT=14'	SIZE	SPA.	C5	SIZE	SPA.	C6	SIZE	SPA.	SIZE	SPA.	C4	HT=12'	HT=13'	HT=14'	SIZE	SPA.	C7	SIZE	SPA.	SIZE	SPA.	G1
1 FT	14	12	9	11	5	6	5	6	55.6	34.0	34.0	34.0	5	13	110.0	5	13	30.5	5	8	6	6	94.6	152	164	176	5	6	51.5	5	12	5	8.5	12
2 FT	14	12	9	11	5	6	6	7.5	55.6	34.0	34.0	38.0	5	12	110.0	5	12	30.0	5	7.5	6	6	89.4	152	164	176	5	6	51.0	5	12	5	8.5	12
4 FT	10	12	10	11	5	7	6	7	58.3	30.0	30.0	34.0	6	16	112.5	6	16	35.5	5	7	6	6.5	83.4	152	164	176	6	7	53.5	5	11.5	5	8	12
6 FT	10	12	10	11	5	7.5	6	6.5	78.8	30.0	34.0	34.0	6	15	57.5	6	15	34.0	5	6.5	6	6	77.1	152	164	176	6	6.5	52.5	5	12	5	7.5	12
8 FT	10	13	10	11	5	7.5	6	6	70.1	34.0	34.0	34.0	6	14	54.0	6	14	33.5	5	6	6	6	74.1	153	165	177	6	6.5	52.0	5	12	5	7	0
10 FT	11	13	11	11	5	7.5	6	7	67.0	31.0	31.0	35.0	6	14	52.5	6	14	33.0	5	6	6	6	69.9	153	165	177	6	6	51.5	5	12	5	7.5	0
12 FT	12	14	12	11	5	7	6	8	64.6	32.0	32.0	36.0	6	14	51.5	6	14	33.0	6	8	6	7	67.6	154	166	178	6	6	51.5	5	12	5	7	0
14 FT	13	15	12	11	5	6.5	6	7	63.4	33.0	37.0	37.0	6	13	51.0	6	13	33.0	6	7.5	6	6.5	66.4	155	167	179	6	6	51.0	5	12	5	7	0
16 FT	14	16	13	11	5	6	6	7	62.3	34.0	38.0	38.0	6	13	51.0	6	13	33.0	6	7	6	7	64.8	156	168	180	6	6	51.0	5	12	5	6.5	0
18 FT	15	17	13	11	6	8	6	6.5	67.6	35.0	39.0	39.0	6	12	56.5	6	12	38.5	6	6.5	6	6	63.8	157	169	181	6	6	51.0	5	12	5	6.5	0
20 FT	16	19	14	11	6	8	6	6.5	67.4	36.0	40.0	40.0	6	12	56.0	6	12	38.5	6	7.5	6	6.5	63.8	159	171	183	6	6	51.5	5	12	5	6	0
22 FT	17	20	14	11	6	7.5	6	6	67.3	37.0	41.0	41.0	6	12	55.5	6	12	38.5	6	7	6	6	63.5	160	172	184	6	6	51.0	5	12	5	6	0
24 FT	18	21	15	11	6	7	6	6.5	67.4	42.0	42.0	42.0	6	12	55.0	6	12	38.5	6	7	6	6.5	63.4	161	173	185	7	7.5	54.5	5	12	6	8	0
26 FT	19	22	15	11	6	6.5	6	6.5	65.3	43.0	43.0	43.0	6	13	54.5	6	13	38.0	6	7	6	7	61.1	162	174	186	7	7.5	54.0	5	12	6	8	0
28 FT	20	23	15	11	6	6.5	6	6	65.3	44.0	44.0	44.0	6	12	54.0	6	12	38.0	6	7	6	6.5	61.3	163	175	187	7	7	54.0	5	12	6	8	0
30 FT	21	24	16	11	6	6.5	6	6	65.8	45.0	45.0	45.0	6	12	53.0	6	12	37.0	6	6.5	6	7	61.4	164	176	188	7	7	54.0	5	12	6	8	0
32 FT	22	25	16	11	6	6	7	7.5	70.8	46.0	46.0	46.0	7	15	57.5	7	15	41.0	6	6.5	6	6.5	61.6	165	177	189	7	6.5	54.0	5	12	6	8	0
34 FT	23	26	17	11	6	6	6	6	66.4	47.0	47.0	47.0	7	15	56.5	7	15	40.0	6	6.5	6	7	61.9	166	178	190	7	6.5	54.5	5	12	6	7.5	0
36 FT	23	27	17	11	7	7.5	7	7	71.3	47.0	47.0	47.0	7	15	56.5	7	15	41.0	6	6.5	6	6.5	62.0	167	179	191	7	6	54.5	5	12	6	7.5	0
38 FT	24	28	18	11	7	7.5	7	7.5	71.8	48.0	48.0	48.0	7	14	55.5	7	14	40.0	6	6	6	6.5	62.4	168	180	192	7	6	54.5	5	12	6	7	0
40 FT	25	29	19	11	7	7.5	7	7.5	72.4	49.0	49.0	49.0	7	14	55.0	7	14	39.0	6	6	6	6.5	62.6	169	181	193	8	7.5	60.5	5	12	6	6.5	0
42 FT	26	30	19	11	7	7.5	7	7	72.5	50.0	50.0	50.0	7	13	54.5	7	13	38.0	6	6	6	6.5	62.9	170	182	194	8	7.5	60.5	5	12	6	6.5	0
44 FT	27	31	20	11	7	7	7	7.5	73.0	51.0	51.0	51.0	7	14	54.0	7	14	38.0	6	6	6	6	63.3	171	183	195	8	7	60.5	5	12	6	6.5	0
46 FT	28	32	20	11	7	7	7	6.5	73.1	52.0	52.0	52.0	7	14	53.5	7	14	38.0	6	6	6	6	63.5	172	184	196	8	7	60.5	5	12	6	6.5	0
48 FT	28	32	21	11	7	6.5	7	6.5	73.6	52.0	52.0	52.0	7	14	53.5	7	14	37.5	7	7	6	6	63.5	172	184	196	8	7	60.5	5	12	6	6	0
50 FT	28	33	22	11	7	6.5	7	6.5	74.1	52.0	52.0	52.0	7	13	53.5	7	13	37.5	7	7.5	6	6	63.9	173	185	197	8	7	60.5	5	12	6	6	0

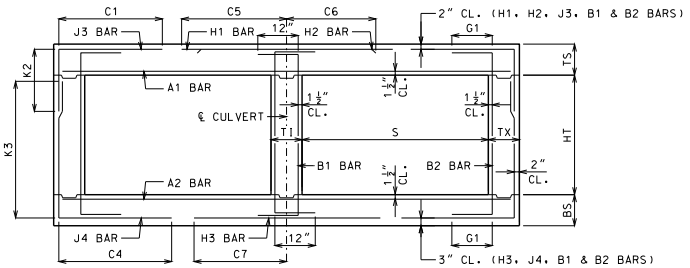

BAR DIMENSIONS DIAGRAM
SYMMETRICAL ABOUT ℄ CULVERT.

GENERAL NOTES:

IF DESIGN FILL IS BETWEEN TABULATED DESIGN FILLS, USE THE NEXT GREATER TABULATED DESIGN FILL, EXCEPT FOR DESIGN FILLS BETWEEN 2 FEET AND 4 FEET. FOR DESIGN FILLS BETWEEN 2 FEET AND 4 FEET USE THE GREATER MEMBER THICKNESS, AREA OF REINFORCEMENT AND BAR DIMENSIONS FROM THE 2 FEET AND 4 FEET TABULATED DESIGN FILLS. AREA OF REINFORCEMENT EQUALS BAR AREA PER FOOT SPACING.

SPECIAL DESIGNS ARE REQUIRED WHEN THE DESIGN FILL IS LESS THAN 1 FOOT OR GREATER THAN 50 FEET.

DIMENSIONS ARE IN INCHES UNLESS OTHERWISE SPECIFIED.

DESIGN FILLS ARE MEASURED FROM THE TOP OF TOP SLAB TO THE TOP OF EARTH FILL OR ROADWAY.

CULVERTS MEET STRENGTH AND SERVICEABILITY REQUIREMENTS FOR THE DESIGN VEHICULAR LIVE LOAD HL-93 MINUS THE LANE LOAD.

MISSOURI HIGHWAYS AND TRANSPORTATION COMMISSION
105 WEST CAPITOL
JEFFERSON CITY, MO 65102
1-888-ASK-MODOT (1-888-275-6636)

STATE OF MISSOURI
DENNIS W. HECKMANN
NUMBER PE-27141
PROFESSIONAL ENGINEER
THIS SHEET HAS BEEN SIGNED, SEALED AND DATED ELECTRONICALLY.

CONCRETE DOUBLE BOX CULVERT

MEMBER THICKNESS
BAR SIZE, SPACING & DIMENSIONS

SPAN (S): 11 FEET
HEIGHT (HT): 12 THRU 14 FEET

DATE EFFECTIVE: 10/01/2011
DATE PREPARED: 9/8/2011

703.47

SHEET NO.
17 OF 27

IF A SEAL IS PRESENT ON THIS SHEET IT HAS BEEN ELECTRONICALLY SEALED AND DATED.

SPAN (S) = 12 FT HEIGHT (HT) = 6 FT OR 7 FT OR 8 FT

DESIGN FILL	MEMBER THICKNESS				TOP SLAB BARS													BOTTOM SLAB BARS											WALL BARS				
					A1 BARS		J3 BARS			K2			H1 BARS			H2 BARS		A2 BARS		J4 BARS			K3			H3 BARS			B1 BARS		B2 BARS		
	TS	BS	TX	TI	SIZE	SPA.	SIZE	SPA.	C1	HT=6′	HT=7′	HT=8′	SIZE	SPA.	C5	SIZE	SPA.	C6	SIZE	SPA.	SIZE	SPA.	C4	HT=6′	HT=7′	HT=8′	SIZE	SPA.	C7	SIZE	SPA.	SIZE	SPA.	G1
1 FT	14	10	8	8	5	6	4	6	56.1	30.0	30.0	30.0	5	12	115.0	5	12	31.5	5	7.5	5	6.5	52.4	78	90	102	6	6.5	56.5	5	12	5	12	12
2 FT	15	11	8	8	6	8	4	6.5	59.1	31.0	31.0	31.0	6	16	118.0	6	16	39.0	5	7.5	5	7.5	47.9	79	91	103	6	6.5	56.0	5	12	5	12	12
4 FT	11	10	8	8	5	6.5	5	7	43.6	31.0	31.0	31.0	6	15	77.5	6	15	36.5	5	6.5	5	6	42.6	78	90	102	7	6.5	58.5	5	12	5	12	12
6 FT	11	11	8	8	5	7	5	6.5	40.9	27.0	31.0	31.0	6	14	63.0	6	14	35.0	5	6.5	5	7	39.3	79	91	103	7	6.5	57.5	5	12	5	12	12
8 FT	11	13	8	8	5	7	5	6	39.1	27.0	27.0	31.0	6	12	58.0	6	12	34.0	5	6	5	8.5	36.3	81	93	105	6	6	54.5	5	12	5	12	0
10 FT	12	14	8	8	5	6.5	5	6.5	37.0	28.0	28.0	32.0	6	12	56.5	6	12	33.5	6	8	5	8.5	34.5	82	94	106	6	6	54.5	5	12	5	12	0
12 FT	14	15	8	8	5	6	5	8	34.6	30.0	34.0	34.0	6	13	55.5	6	13	33.5	6	7.5	5	8.5	33.8	83	95	107	7	7	57.0	5	12	5	12	0
14 FT	15	16	8	8	6	8	5	7.5	38.4	31.0	35.0	35.0	6	12	61.0	6	12	39.5	6	7.5	5	8	32.9	84	96	108	7	7	57.0	5	12	5	12	0
16 FT	16	17	8	8	6	8	5	7	37.5	32.0	36.0	36.0	7	16	65.5	7	16	44.5	6	7	5	7	32.3	85	97	109	7	6.5	57.0	5	12	5	12	0
18 FT	17	19	8	8	6	7.5	5	6.5	37.0	37.0	37.0	37.0	7	15	65.0	7	15	44.0	6	7	5	6.5	31.6	87	99	111	7	7	57.0	5	12	5	10.5	0
20 FT	18	20	8	8	6	7	5	6.5	36.4	38.0	38.0	38.0	7	15	64.5	7	15	44.0	6	6.5	5	6	31.3	88	100	112	7	7	57.0	5	12	5	9.5	0
22 FT	19	21	8	8	6	6	5	6	36.0	39.0	39.0	39.0	7	14	64.0	7	14	44.0	6	6.5	6	7.5	34.1	89	101	113	7	7	57.0	5	12	5	9.5	0
24 FT	21	22	8	8	6	6	6	7	39.6	45.0	45.0	45.0	7	15	63.5	7	15	44.0	6	6.5	6	7	34.4	90	102	114	7	7	56.5	5	12	5	9.5	0
26 FT	21	23	8	8	6	6	6	7	38.3	45.0	45.0	45.0	7	14	63.0	7	14	43.5	6	6.5	6	6.5	32.8	91	103	115	7	7	56.5	5	12	5	9.5	0
28 FT	23	24	8	8	6	6	6	6	38.3	47.0	47.0	47.0	7	15	62.0	7	15	43.0	6	6	6	6	33.0	92	104	116	7	7	56.5	5	12	5	9	0
30 FT	23	25	8	8	7	7	6	6	38.3	47.0	47.0	47.0	7	14	62.0	7	14	43.5	6	6	6	6	33.0	93	105	117	7	6.5	56.5	5	12	5	8.5	0
32 FT	25	27	9	8	7	7.5	6	6.5	39.1	49.0	49.0	49.0	7	14	61.0	7	14	41.5	6	6	6	6.5	33.8	95	107	119	7	6	56.5	5	12	5	8.5	0
34 FT	25	28	9	8	7	6.5	6	6.5	39.3	49.0	49.0	49.0	7	13	61.0	7	13	42.5	6	6	6	6	33.8	96	108	120	7	6	56.5	5	12	5	8.5	0
36 FT	26	29	9	8	7	6.5	6	6.5	39.3	50.0	50.0	50.0	7	13	60.0	7	13	41.5	6	6	6	6	33.9	97	109	121	8	7.5	62.5	5	12	5	8	0
38 FT	27	30	10	8	7	6.5	6	7	40.1	51.0	51.0	51.0	7	13	59.0	7	13	41.0	6	6	6	6.5	34.5	98	110	122	8	7.5	62.5	5	12	5	8	0
40 FT	28	31	10	8	7	6.5	6	6.5	40.1	52.0	52.0	52.0	7	12	58.5	7	12	40.0	7	8	6	6	34.6	99	111	123	8	7	62.5	5	12	5	8	0
42 FT	29	32	10	8	7	6.5	6	6.5	40.1	53.0	53.0	53.0	7	12	57.5	7	12	39.0	7	8	6	6	34.9	100	112	124	8	7	62.5	5	12	5	7.5	0
44 FT	30	33	10	8	7	6.5	6	6	40.3	54.0	54.0	54.0	7	12	56.5	7	12	38.5	7	7.5	7	6.5	38.1	101	113	125	8	6.5	62.0	5	12	5	7	0
46 FT	31	34	10	8	7	6	6	6	40.3	55.0	55.0	55.0	8	15	64.0	8	15	45.5	7	7.5	7	6.5	38.3	102	114	126	8	6.5	62.0	5	12	5	6.5	0
48 FT	31	34	11	8	7	6	6	6.5	41.0	55.0	55.0	55.0	8	15	64.0	8	15	46.0	7	6.5	6	6	35.6	102	114	126	8	6.5	62.5	5	12	5	7.5	0
50 FT	32	35	11	8	8	7.5	6	6.5	41.0	56.0	56.0	56.0	8	15	63.5	8	15	45.5	7	7	6	6	35.8	103	115	127	8	6.5	62.0	5	12	5	7	0

SPAN (S) = 12 FT HEIGHT (HT) = 9 FT OR 10 FT OR 11 FT

DESIGN FILL	MEMBER THICKNESS				TOP SLAB BARS													BOTTOM SLAB BARS											WALL BARS				
					A1 BARS		J3 BARS			K2			H1 BARS			H2 BARS		A2 BARS		J4 BARS			K3			H3 BARS			B1 BARS		B2 BARS		
	TS	BS	TX	TI	SIZE	SPA.	SIZE	SPA.	C1	HT=9′	HT=10′	HT=11′	SIZE	SPA.	C5	SIZE	SPA.	C6	SIZE	SPA.	SIZE	SPA.	C4	HT=9′	HT=10′	HT=11′	SIZE	SPA.	C7	SIZE	SPA.	SIZE	SPA.	G1
1 FT	14	11	8	9	5	6	5	8	58.3	34.0	34.0	34.0	5	12	117.5	5	12	32.0	5	7.5	6	6.5	77.5	115	127	139	6	7	57.0	5	12	5	10	12
2 FT	15	12	8	9	6	8	5	8	62.3	35.0	35.0	35.0	6	16	121.5	6	16	39.5	5	7.5	6	7	71.9	116	128	140	6	7	56.5	5	12	5	10	12
4 FT	11	11	9	9	5	6.5	6	7	76.1	31.0	31.0	35.0	6	15	86.0	6	15	37.0	5	6.5	6	7	61.8	115	127	139	6	6	56.0	5	11.5	5	10.5	12
6 FT	11	12	9	9	5	7	6	7	59.0	31.0	31.0	35.0	6	14	63.0	6	14	35.5	5	6	6	7	57.6	116	128	140	6	6	55.0	5	12	5	10	12
8 FT	11	13	9	9	5	7	6	7	54.0	31.0	31.0	35.0	6	13	58.0	6	13	34.5	5	6	6	7	54.5	117	129	141	6	6	55.0	5	12	5	9.5	0
10 FT	12	14	10	9	5	7	5	6	49.0	32.0	32.0	32.0	6	12	56.0	6	12	34.0	6	8	5	6.5	49.3	118	130	142	7	7	57.5	5	12	5	10	0
12 FT	13	15	10	9	5	6.5	6	7.5	50.1	33.0	33.0	33.0	6	12	55.0	6	12	33.5	6	7.5	5	6.5	47.6	119	131	143	7	7	57.5	5	12	5	9	0
14 FT	15	16	10	9	6	8	5	6	50.6	35.0	35.0	35.0	6	12	60.5	6	12	39.5	6	7	5	6	46.4	120	132	144	7	7	57.0	5	12	5	8	0
16 FT	16	17	10	9	6	8	6	7.5	53.8	36.0	36.0	36.0	6	12	60.0	6	12	39.5	6	6.5	5	6	45.4	121	133	145	7	6.5	57.0	5	12	5	8	0
18 FT	17	19	10	9	6	7.5	6	7	53.1	37.0	37.0	41.0	7	16	64.5	7	16	44.5	6	7	6	7.5	47.8	123	135	147	7	7	57.0	5	12	5	8	0
20 FT	18	20	11	9	6	7	6	7.5	53.1	38.0	38.0	38.0	7	15	64.0	7	15	44.0	6	6.5	5	6	44.6	124	136	148	7	7	57.0	5	12	5	7.5	0
22 FT	19	21	12	9	6	6.5	6	7.5	53.5	39.0	39.0	39.0	7	15	63.5	7	15	44.0	6	6.5	5	6.5	44.8	125	137	149	7	7	57.0	5	12	5	7.5	0
24 FT	20	23	12	9	6	6.5	6	7	53.4	40.0	40.0	40.0	7	15	63.0	7	15	44.0	6	6.5	5	6.5	44.6	127	139	151	7	7	57.0	5	12	5	7	0
26 FT	21	23	12	9	6	6	6	7.5	51.4	41.0	41.0	41.0	7	15	62.0	7	15	43.5	6	6	5	6.5	42.8	127	139	151	7	7	57.0	5	12	5	7	0
28 FT	22	25	12	9	6	6	6	7	51.4	42.0	42.0	42.0	7	15	61.5	7	15	43.5	6	6.5	5	6.5	42.9	129	141	153	7	6.5	57.0	5	12	5	7	0
30 FT	23	26	12	9	7	7.5	6	6.5	51.3	43.0	43.0	43.0	7	15	61.0	7	15	43.5	6	6	5	6	43.0	130	142	154	7	6.5	57.0	5	12	5	7	0
32 FT	24	27	13	9	7	7.5	6	7	52.0	44.0	44.0	44.0	7	14	60.5	7	14	42.5	6	6	5	6	43.4	131	143	155	7	6	57.0	5	12	5	6.5	0
34 FT	25	28	13	9	7	7	6	7	52.0	45.0	45.0	45.0	7	14	59.5	7	14	41.5	6	6	5	6	43.5	132	144	156	7	6	57.0	5	12	5	6.5	0
36 FT	26	29	13	9	7	7	6	6	51.9	46.0	50.0	50.0	7	13	58.5	7	13	41.0	6	6	6	8.5	46.6	133	145	157	8	7.5	63.0	5	12	5	6.5	0
38 FT	27	30	14	9	7	7	6	6.5	52.6	47.0	51.0	51.0	7	13	57.5	7	13	40.0	7	8	6	8	47.1	134	146	158	8	7.5	63.0	5	12	5	6	0
40 FT	28	31	14	9	7	6.5	6	6.5	52.6	52.0	52.0	52.0	7	12	56.5	7	12	39.0	7	7.5	6	7.5	47.3	135	147	159	8	7	63.0	5	12	5	6	0
42 FT	28	32	15	9	7	6	6	6.5	53.5	52.0	52.0	52.0	7	12	56.5	7	12	39.5	7	7.5	6	7.5	47.5	136	148	160	8	7	63.0	5	12	6	8	0
44 FT	29	33	15	9	7	6	6	6.5	53.4	53.0	53.0	53.0	7	12	56.0	7	12	38.5	7	7.5	6	7	47.8	137	149	161	8	6.5	63.0	5	12	6	8	0
46 FT	30	34	15	9	7	6	6	6	53.4	54.0	54.0	54.0	7	12	55.5	7	12	38.0	7	7.5	6	7	47.9	138	150	162	8	6.5	63.0	5	12	6	8	0
48 FT	31	35	16	9	7	6	6	6.5	54.1	55.0	55.0	55.0	7	12	55.0	7	12	37.5	7	7	6	6.5	48.4	139	151	163	8	6.5	63.0	5	12	6	8	0
50 FT	31	36	16	9	8	7.5	6	6	54.3	55.0	55.0	55.0	7	12	55.0	7	12	37.5	7	7	6	6.5	48.4	140	152	164	8	6.5	63.0	5	12	6	8	0

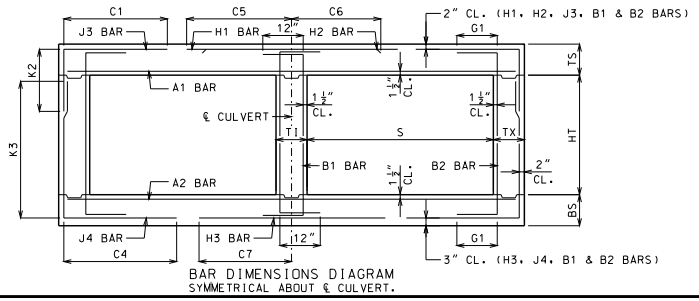

BAR DIMENSIONS DIAGRAM
SYMMETRICAL ABOUT ℄ CULVERT.

GENERAL NOTES:

IF DESIGN FILL IS BETWEEN TABULATED DESIGN FILLS, USE THE NEXT GREATER TABULATED DESIGN FILL, EXCEPT FOR DESIGN FILLS BETWEEN 2 FEET AND 4 FEET. FOR DESIGN FILLS BETWEEN 2 FEET AND 4 FEET USE THE GREATER MEMBER THICKNESS, AREA OF REINFORCEMENT AND BAR DIMENSIONS FROM THE 2 FEET AND 4 FEET TABULATED DESIGN FILLS. AREA OF REINFORCEMENT EQUALS BAR AREA PER FOOT SPACING.

SPECIAL DESIGNS ARE REQUIRED WHEN THE DESIGN FILL IS LESS THAN 1 FOOT OR GREATER THAN 50 FEET.

DIMENSIONS ARE IN INCHES UNLESS OTHERWISE SPECIFIED.

DESIGN FILLS ARE MEASURED FROM THE TOP OF TOP SLAB TO THE TOP OF EARTH FILL OR ROADWAY.

CULVERTS MEET STRENGTH AND SERVICEABILITY REQUIREMENTS FOR THE DESIGN VEHICULAR LIVE LOAD HL-93 MINUS THE LANE LOAD.

MISSOURI HIGHWAYS AND TRANSPORTATION COMMISSION
105 WEST CAPITOL
JEFFERSON CITY, MO 65102
1-888-ASK-MODOT (1-888-275-6636)

STATE OF MISSOURI
DENNIS W. HECKMAN
NUMBER PE-27141
PROFESSIONAL ENGINEER
THIS SHEET HAS BEEN SIGNED, SEALED AND DATED ELECTRONICALLY.

CONCRETE DOUBLE BOX CULVERT

MEMBER THICKNESS
BAR SIZE, SPACING & DIMENSIONS

SPAN (S): 12 FEET
HEIGHT (HT): 6 THRU 11 FEET

DATE EFFECTIVE: 10/01/2011
DATE PREPARED: 9/8/2011

703.47

SHEET NO.
18 OF 27

IF A SEAL IS PRESENT ON THIS SHEET IT HAS BEEN ELECTRONICALLY SEALED AND DATED.

SPAN (S) = 12 FT HEIGHT (HT) = 12 FT OR 13 FT																															
DESIGN FILL	MEMBER THICKNESS				TOP SLAB BARS												BOTTOM SLAB BARS											WALL BARS				
					A1 BARS		J3 BARS					H1 BARS			H2 BARS			A2 BARS		J4 BARS					H3 BARS			B1 BARS		B2 BARS		
	TS	BS	TX	TI	SIZE	SPA.	SIZE	SPA.	C1	K2 HT=12'	K2 HT=13'	SIZE	SPA.	C5	SIZE	SPA.	C6	SIZE	SPA.	SIZE	SPA.	C4	K3 HT=12'	K3 HT=13'	SIZE	SPA.	C7	SIZE	SPA.	SIZE	SPA.	G1
1 FT	14	11	9	10	5	6	5	6.5	59.0	34.0	34.0	5	12	118.0	5	12	32.5	5	7	6	6	88.9	151	163	6	6.5	57.5	5	12	5	8.5	12
2 FT	15	12	9	10	6	8	5	7	63.0	35.0	35.0	6	16	122.0	6	16	39.5	5	7	6	6	83.6	152	164	6	7	57.0	5	12	5	8.5	12
4 FT	11	12	9	10	5	6.5	6	7	61.0	35.0	35.0	6	15	120.0	6	15	37.0	5	6.5	6	6	76.5	152	164	6	6.5	56.5	5	12	5	8.5	12
6 FT	11	12	9	10	5	7	6	6.5	73.5	35.0	35.0	6	14	63.5	6	14	35.5	5	6	6	6	70.0	152	164	6	6	55.5	5	12	5	8.5	12
8 FT	11	13	10	10	5	7	6	7	63.9	31.0	35.0	6	13	58.0	6	13	34.5	5	6	6	6.5	65.8	153	165	6	6	55.0	5	12	5	8	0
10 FT	12	14	10	10	5	7	6	7	61.6	36.0	36.0	6	12	56.5	6	12	34.5	6	8	6	6	63.1	154	166	7	7	57.5	5	12	5	8	0
12 FT	13	15	11	10	5	6.5	6	7.5	59.9	33.0	37.0	6	12	55.0	6	12	34.0	6	7.5	6	6.5	61.4	155	167	7	7	57.5	5	12	5	7.5	0
14 FT	14	16	12	10	5	6	6	7.5	58.8	34.0	38.0	6	12	54.5	6	12	34.0	6	7	6	7.5	60.0	156	168	7	7	57.5	5	12	5	7	0
16 FT	16	18	12	10	6	8	6	7	64.1	36.0	40.0	6	12	60.0	6	12	40.0	6	7	6	7.5	59.5	158	170	6	6	54.0	5	12	5	7	0
18 FT	17	19	12	10	6	7.5	6	6.5	63.1	37.0	41.0	6	12	59.5	6	12	39.5	6	7	6	6.5	58.5	159	171	7	7	57.0	5	12	5	7	0
20 FT	18	20	13	10	6	7	6	6.5	62.6	38.0	42.0	6	12	58.5	6	12	39.5	6	6.5	6	7.5	57.9	160	172	7	7	57.0	5	12	5	6.5	0
22 FT	19	21	13	10	6	6.5	6	6.5	62.3	39.0	43.0	7	16	63.0	7	16	44.5	6	6	6	6.5	57.5	161	173	7	7	57.0	5	12	5	6.5	0
24 FT	20	23	14	10	6	6.5	6	6.5	62.5	40.0	44.0	7	16	62.5	7	16	44.0	6	6.5	6	7.5	57.8	163	175	7	7	57.0	5	12	5	6	0
26 FT	21	24	14	10	6	6	6	6	62.3	41.0	45.0	7	15	62.0	7	15	44.0	6	6.5	6	7	57.6	164	176	7	7	57.0	5	12	5	6	0
28 FT	22	25	14	10	6	6	6	6	59.8	42.0	46.0	7	15	61.0	7	15	43.5	6	6.5	6	7.5	55.1	165	177	7	6.5	57.0	5	12	5	6	0
30 FT	23	26	15	10	7	8	6	6	60.3	47.0	47.0	7	15	60.0	7	15	42.5	6	6	6	7.5	55.4	166	178	7	6.5	57.0	5	12	6	8	0
32 FT	24	27	15	10	7	7.5	6	6	60.3	48.0	48.0	7	14	59.5	7	14	42.0	6	6	6	7.5	55.5	167	179	7	6	57.0	5	12	6	8	0
34 FT	25	28	16	10	7	7.5	6	6	60.9	49.0	49.0	7	14	58.5	7	14	41.0	6	6	6	7.5	55.8	168	180	7	6	57.0	5	12	6	8	0
36 FT	25	29	16	10	7	6.5	7	7.5	65.8	49.0	49.0	7	13	58.5	7	13	41.5	6	6	6	7.5	55.8	169	181	8	7.5	63.0	5	12	6	8	0
38 FT	26	30	17	10	7	7	6	6	61.5	50.0	50.0	7	13	57.5	7	13	40.5	7	7.5	6	7	56.1	170	182	8	7.5	63.0	5	12	6	7.5	0
40 FT	27	31	17	10	7	6.5	7	7.5	66.5	51.0	51.0	7	13	57.0	7	13	40.0	7	7.5	6	7	56.3	171	183	8	7	63.0	5	12	6	7.5	0
42 FT	28	32	18	10	7	6.5	7	7.5	67.1	52.0	52.0	7	12	56.5	7	12	39.0	7	7.5	6	6.5	56.6	172	184	8	7	63.0	5	12	6	7	0
44 FT	29	33	18	10	7	6.5	7	7	67.1	53.0	53.0	7	12	56.0	7	12	38.0	7	7.5	6	6.5	56.9	173	185	8	6.5	63.0	5	12	6	7	0
46 FT	29	34	19	10	7	6	7	7.5	67.9	53.0	53.0	7	12	56.0	7	12	38.5	7	7.5	6	6.5	57.0	174	186	8	6.5	63.0	5	12	6	6.5	0
48 FT	30	35	19	10	7	6	7	6.5	67.9	54.0	54.0	7	12	55.0	7	12	38.0	7	7	6	6.5	57.3	175	187	8	6.5	63.0	5	12	6	6.5	0
50 FT	31	36	20	10	7	6	7	7	68.6	55.0	55.0	7	13	54.5	7	13	37.5	7	7	6	6.5	57.6	176	188	8	6	63.0	5	12	6	6.5	0

SPAN (S) = 12 FT HEIGHT (HT) = 14 FT OR 15 FT																															
DESIGN FILL	MEMBER THICKNESS				TOP SLAB BARS												BOTTOM SLAB BARS											WALL BARS				
					A1 BARS		J3 BARS					H1 BARS			H2 BARS			A2 BARS		J4 BARS					H3 BARS			B1 BARS		B2 BARS		
	TS	BS	TX	TI	SIZE	SPA.	SIZE	SPA.	C1	K2 HT=14'	K2 HT=15'	SIZE	SPA.	C5	SIZE	SPA.	C6	SIZE	SPA.	SIZE	SPA.	C4	K3 HT=14'	K3 HT=15'	SIZE	SPA.	C7	SIZE	SPA.	SIZE	SPA.	G1
1 FT	14	12	10	12	5	6	5	6	60.0	34.0	34.0	5	12	119.0	5	12	32.5	5	7	6	6	98.8	176	188	6	7	58.0	5	12	5	8	12
2 FT	15	12	10	12	6	8	6	8	67.0	35.0	39.0	6	16	126.0	6	16	40.0	5	6.5	6	6	92.5	176	188	6	6.5	57.0	5	12	5	8	12
4 FT	11	13	10	12	5	6.5	6	6.5	62.0	35.0	35.0	6	16	121.0	6	16	37.5	5	6.5	6	6	89.8	177	189	6	7	57.0	5	12	5	7	12
6 FT	11	13	11	12	5	7	6	7	83.8	31.0	35.0	6	15	61.0	6	15	36.0	5	6	6	6.5	81.4	177	189	6	6.5	56.0	5	12	5	7	12
8 FT	11	13	12	12	5	7	6	7.5	73.9	35.0	35.0	6	13	57.5	6	13	35.0	5	6	6	6.5	76.1	177	189	7	7	58.0	5	12	5	7	0
10 FT	12	14	12	12	5	7	6	7	71.4	36.0	36.0	6	13	56.0	6	13	35.0	6	8	6	6.5	74.1	178	190	7	7	58.0	5	12	5	7	0
12 FT	13	15	13	12	5	6.5	6	7.5	68.8	37.0	37.0	6	13	55.0	6	13	34.5	6	7.5	6	6.5	71.6	179	191	7	7	57.5	5	12	5	6.5	0
14 FT	14	16	13	12	5	6	6	6.5	67.3	38.0	38.0	6	12	54.5	6	12	34.5	6	6.5	6	6	70.1	180	192	7	7	57.5	5	12	5	6.5	0
16 FT	15	18	14	12	6	8	6	6.5	72.1	39.0	39.0	6	12	60.0	6	12	40.5	6	7	6	6.5	69.5	182	194	6	6	54.5	5	12	5	6	0
18 FT	17	19	14	12	6	7.5	6	6	72.1	41.0	41.0	6	12	59.5	6	12	40.5	6	6.5	6	6	68.1	183	195	6	6	54.5	5	12	5	6	0
20 FT	18	20	15	12	6	7	6	6	71.5	42.0	42.0	6	12	59.0	6	12	40.0	6	6.5	6	6	67.1	184	196	7	7	57.5	5	12	6	8	0
22 FT	19	22	16	12	6	6.5	6	6	71.4	43.0	43.0	6	12	58.5	6	12	40.0	6	6.5	6	6	67.4	186	198	7	7	57.5	5	12	6	8	0
24 FT	20	23	16	12	6	6.5	6	6	71.3	44.0	44.0	6	12	58.0	6	12	40.0	6	6.5	6	6	67.1	187	199	7	7	57.5	5	12	6	8	0
26 FT	21	24	17	12	6	6	6	6	71.4	45.0	45.0	6	12	57.0	6	12	39.5	6	6	6	6	67.1	188	200	7	7	57.5	5	12	6	7.5	0
28 FT	22	25	17	12	6	6	6	6	69.1	46.0	46.0	7	15	61.5	7	15	44.0	6	6	6	6.5	64.9	189	201	7	6.5	57.5	5	12	6	7.5	0
30 FT	23	26	17	12	6	6	7	7.5	74.1	47.0	47.0	7	15	61.0	7	15	43.0	6	6	6	6.5	64.9	190	202	7	6.5	57.5	5	12	6	7.5	0
32 FT	23	27	17	12	7	7	7	6.5	74.0	47.0	47.0	7	14	61.0	7	14	44.0	6	6	6	6	65.0	191	203	7	6	57.5	5	12	6	7.5	0
34 FT	24	28	18	12	7	7	7	7	74.5	48.0	48.0	7	14	60.0	7	14	43.0	6	6	6	6	65.3	192	204	7	6	57.5	5	12	6	7	0
36 FT	25	29	19	12	7	7	7	7	75.0	49.0	49.0	7	14	59.0	7	14	42.0	7	7.5	6	6.5	65.5	193	205	8	7.5	63.5	5	12	6	6.5	0
38 FT	26	30	20	12	7	7	7	7.5	75.5	50.0	50.0	7	13	58.0	7	13	41.5	7	7.5	6	6	65.9	194	206	8	7.5	63.5	5	12	6	6.5	0
40 FT	27	31	20	12	7	7	7	6.5	75.6	51.0	51.0	7	13	57.5	7	13	40.5	7	7.5	6	6	66.0	195	207	8	7	63.5	5	12	6	6.5	0
42 FT	28	32	21	12	7	6.5	7	7	76.3	52.0	52.0	7	12	57.0	7	12	39.5	7	7	6	6	66.4	196	208	8	7	63.5	5	12	6	6	0
44 FT	28	33	22	12	7	6.5	7	7	76.6	52.0	58.0	7	12	57.0	7	12	40.0	7	7	7	7.5	69.6	197	209	8	6.5	63.5	5	12	6	6	0
46 FT	29	34	22	12	7	6.5	7	6	76.8	53.0	59.0	7	12	56.5	7	12	39.0	7	7	7	7.5	69.9	198	210	8	6.5	63.5	5	12	6	6	0
48 FT	30	35	24	12	7	6	7	7	78.0	54.0	60.0	7	12	56.0	7	12	39.0	7	7	7	7.5	70.4	199	211	8	6.5	64.0	5	12	6	6	0
50 FT	30	36	24	12	7	6	7	6	78.0	54.0	60.0	7	12	56.0	7	12	39.0	7	7	7	7.5	70.5	200	212	8	6	64.0	5	12	7	8	0

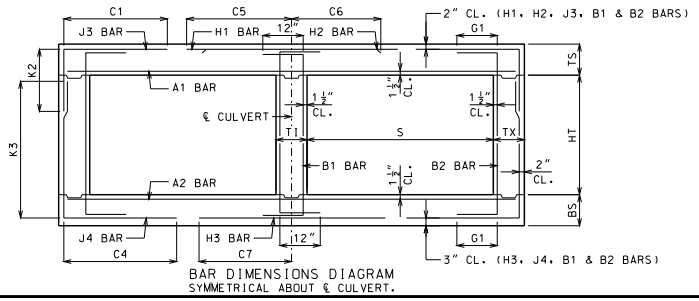

BAR DIMENSIONS DIAGRAM
SYMMETRICAL ABOUT ℄ CULVERT.

GENERAL NOTES:

IF DESIGN FILL IS BETWEEN TABULATED DESIGN FILLS, USE THE NEXT GREATER TABULATED DESIGN FILL, EXCEPT FOR DESIGN FILLS BETWEEN 2 FEET AND 4 FEET. FOR DESIGN FILLS BETWEEN 2 FEET AND 4 FEET USE THE GREATER MEMBER THICKNESS, AREA OF REINFORCEMENT AND BAR DIMENSIONS FROM THE 2 FEET AND 4 FEET TABULATED DESIGN FILLS. AREA OF REINFORCEMENT EQUALS BAR AREA PER FOOT SPACING.

SPECIAL DESIGNS ARE REQUIRED WHEN THE DESIGN FILL IS LESS THAN 1 FOOT OR GREATER THAN 50 FEET.

DIMENSIONS ARE IN INCHES UNLESS OTHERWISE SPECIFIED.

DESIGN FILLS ARE MEASURED FROM THE TOP OF TOP SLAB TO THE TOP OF EARTH FILL OR ROADWAY.

CULVERTS MEET STRENGTH AND SERVICEABILITY REQUIREMENTS FOR THE DESIGN VEHICULAR LIVE LOAD HL-93 MINUS THE LANE LOAD.

MISSOURI HIGHWAYS AND TRANSPORTATION COMMISSION
105 WEST CAPITOL
JEFFERSON CITY, MO 65102
1-888-ASK-MODOT (1-888-275-6636)

STATE OF MISSOURI
DENNIS W. HECKMANN
NUMBER PE-27141
PROFESSIONAL ENGINEER
THIS SHEET HAS BEEN SIGNED, SEALED AND DATED ELECTRONICALLY.

CONCRETE DOUBLE BOX CULVERT

MEMBER THICKNESS
BAR SIZE, SPACING & DIMENSIONS

SPAN (S): 12 FEET
HEIGHT (HT): 12 THRU 15 FEET

DATE EFFECTIVE: 10/01/2011
DATE PREPARED: 9/8/2011

703.47

SHEET NO.
19 OF 27

IF A SEAL IS PRESENT ON THIS SHEET IT HAS BEEN ELECTRONICALLY SEALED AND DATED.

SPAN (S) = 13 FT HEIGHT (HT) = 7 FT OR 8 FT OR 9 FT

DESIGN FILL	MEMBER THICKNESS				TOP SLAB BARS												BOTTOM SLAB BARS											WALL BARS				
					A1 BARS		J3 BARS						H1 BARS			H2 BARS			A2 BARS		J4 BARS						H3 BARS			B1 BARS		B2 BARS	
										K2												K3									
	TS	BS	TX	TI	SIZE	SPA.	SIZE	SPA.	C1	HT=7′	HT=8′	HT=9′	SIZE	SPA.	C5	SIZE	SPA.	C6	SIZE	SPA.	SIZE	SPA.	C4	HT=7′	HT=8′	HT=9′	SIZE	SPA.	C7	SIZE	SPA.	SIZE	SPA.	G1
1 FT	14	10	8	8	5	6	5	8.5	61.8	30.0	34.0	34.0	5	12	125.5	5	12	36.5	5	7	6	7	61.0	90	102	114	6	6	60.0	5	12	5	12	12
2 FT	15	12	8	8	6	8	5	8	65.8	31.0	35.0	35.0	6	16	129.5	6	16	43.5	5	7	5	7	53.8	92	104	116	6	6.5	59.5	5	12	5	12	12
4 FT	11	11	8	8	6	8	6	7	52.1	31.0	31.0	31.0	6	13	82.0	6	13	38.0	5	6.5	5	6	46.5	91	103	115	7	6.5	62.0	5	11	5	12	12
6 FT	12	12	8	8	5	6.5	5	6.5	44.1	32.0	32.0	32.0	6	13	68.0	6	13	36.5	5	6	5	6.5	42.8	92	104	116	7	6.5	61.0	5	12	5	12	12
8 FT	12	13	8	8	5	6	5	6	41.5	32.0	32.0	32.0	7	16	65.0	7	16	38.5	5	6	5	6.5	40.0	93	105	117	7	6.5	60.5	5	12	5	12	0
10 FT	13	15	8	8	5	6	5	6	39.5	29.0	33.0	33.0	7	15	63.0	7	15	38.0	6	7.5	5	8	38.0	95	107	119	7	7	60.5	5	12	5	12	0
12 FT	15	16	8	8	6	8	5	6.5	42.4	35.0	35.0	35.0	7	16	70.0	7	16	46.0	6	7	5	7.5	37.1	96	108	120	7	6.5	60.0	5	12	5	11	0
14 FT	16	17	8	8	6	8	5	6	41.1	36.0	36.0	36.0	7	15	69.0	7	15	46.0	6	7	5	7	36.1	97	109	121	7	6.5	60.0	5	12	5	10	0
16 FT	17	18	8	8	6	7.5	5	6	40.1	37.0	37.0	37.0	7	14	68.5	7	14	45.5	6	6	5	6.5	35.4	98	110	122	7	6.5	60.0	5	12	5	9.5	0
18 FT	18	20	8	8	6	6.5	6	8	43.5	38.0	38.0	38.0	7	14	68.0	7	14	45.5	6	6.5	5	6	34.8	100	112	124	7	6.5	60.0	5	12	5	9.5	0
20 FT	20	21	8	8	6	6.5	6	7.5	42.6	44.0	44.0	44.0	7	14	67.0	7	14	45.5	6	6	6	7.5	37.5	101	113	125	7	6.5	60.0	5	12	5	9	0
22 FT	21	23	8	8	6	6	6	6.5	42.5	45.0	45.0	45.0	7	14	66.5	7	14	45.0	6	6	6	6.5	37.3	103	115	127	7	6.5	60.0	5	12	5	8	0
24 FT	22	24	9	8	6	6	6	7.5	43.1	42.0	42.0	46.0	7	13	66.0	7	13	45.0	6	6	6	7	37.6	104	116	128	7	6.5	60.0	5	12	5	8.5	0
26 FT	23	25	9	8	7	7.5	6	6.5	42.9	47.0	47.0	47.0	7	13	65.5	7	13	45.0	6	6	6	7	37.6	105	117	129	7	6.5	60.0	5	12	5	8.5	0
28 FT	24	26	9	8	7	7.5	6	7	41.3	48.0	48.0	48.0	7	13	64.5	7	13	44.5	7	8	6	6.5	36.1	106	118	130	7	6.5	59.5	5	12	5	8.5	0
30 FT	25	27	9	8	7	7	6	6	41.3	49.0	49.0	49.0	7	13	64.0	7	13	44.5	7	7.5	6	6.5	36.3	107	119	131	7	6	59.5	5	12	5	7.5	0
32 FT	26	29	10	8	7	7	6	7	42.3	50.0	50.0	50.0	7	13	63.5	7	13	44.0	7	8	6	6.5	36.9	109	121	133	8	7.5	65.5	5	12	5	8	0
34 FT	27	30	10	8	7	6.5	6	6.5	42.3	51.0	51.0	51.0	7	13	62.5	7	13	43.5	7	7.5	6	6.5	37.0	110	122	134	8	7.5	65.5	5	12	5	7.5	0
36 FT	28	31	11	8	7	6.5	6	7.5	43.1	52.0	52.0	52.0	7	12	62.0	7	12	42.5	7	7.5	6	7	37.5	111	123	135	8	7	65.5	5	12	5	7.5	0
38 FT	29	32	11	8	7	6	6	7	43.1	53.0	53.0	53.0	7	12	61.0	7	12	41.5	7	7.5	6	6.5	37.6	112	124	136	8	7	65.5	5	12	5	7.5	0
40 FT	30	33	11	8	7	6	6	7	43.1	54.0	54.0	54.0	7	12	60.0	7	12	41.0	7	7	6	6.5	37.9	113	125	137	8	6.5	65.5	5	12	5	7	0
42 FT	31	34	12	8	7	6	6	7.5	44.0	55.0	55.0	55.0	8	15	67.0	8	15	48.0	7	7	6	7	38.4	114	126	138	8	6.5	65.5	5	12	5	7	0
44 FT	32	35	12	8	8	7.5	6	7	44.0	56.0	56.0	56.0	8	14	66.5	8	14	47.0	7	7	6	6.5	38.5	115	127	139	8	6.5	65.5	5	12	5	7	0
46 FT	33	36	12	8	8	7	6	7	44.0	57.0	57.0	57.0	8	14	66.0	8	14	46.0	7	7	6	6.5	38.8	116	128	140	8	6	65.5	5	12	5	6.5	0
48 FT	33	37	12	8	8	6.5	6	7	44.0	57.0	57.0	57.0	8	13	66.0	8	13	46.5	7	6.5	6	6.5	38.8	117	129	141	8	6	65.5	5	12	5	6.5	0
50 FT	34	38	12	8	8	7	6	6	44.0	58.0	58.0	58.0	8	14	65.0	8	14	46.0	7	6.5	6	6	39.0	118	130	142	8	6	65.5	5	12	5	6	0

SPAN (S) = 13 FT HEIGHT (HT) = 10 FT OR 11 FT OR 12 FT

DESIGN FILL	MEMBER THICKNESS				TOP SLAB BARS												BOTTOM SLAB BARS											WALL BARS				
					A1 BARS		J3 BARS						H1 BARS			H2 BARS			A2 BARS		J4 BARS						H3 BARS			B1 BARS		B2 BARS	
										K2												K3									
	TS	BS	TX	TI	SIZE	SPA.	SIZE	SPA.	C1	HT=10′	HT=11′	HT=12′	SIZE	SPA.	C5	SIZE	SPA.	C6	SIZE	SPA.	SIZE	SPA.	C4	HT=10′	HT=11′	HT=12′	SIZE	SPA.	C7	SIZE	SPA.	SIZE	SPA.	G1
1 FT	14	11	9	10	5	6	5	7.5	62.6	34.0	34.0	34.0	5	12	126.5	5	12	36.5	5	6.5	6	6.5	81.1	127	139	151	6	6.5	60.5	5	11.5	5	9.5	12
2 FT	15	12	9	10	6	8	5	7.5	66.6	35.0	35.0	35.0	6	16	130.5	6	16	43.5	5	6.5	6	6.5	75.6	128	140	152	6	6.5	60.0	5	12	5	9	12
4 FT	11	11	9	10	6	8	6	7	78.5	35.0	35.0	35.0	6	13	84.0	6	13	38.0	5	6.5	6	6	66.3	127	139	151	7	6.5	62.0	5	9	5	8.5	12
6 FT	12	12	9	10	5	6.5	6	6.5	63.6	32.0	36.0	36.0	6	13	67.0	6	13	37.0	5	6	6	6	61.5	128	140	152	7	6.5	61.5	5	12	5	8.5	12
8 FT	12	14	9	10	5	6	6	6.5	58.3	32.0	32.0	36.0	6	12	61.5	6	12	36.0	6	8	6	6.5	59.1	130	142	154	7	7	61.0	5	12	5	8.5	0
10 FT	13	15	9	10	5	6	6	6	55.4	33.0	33.0	37.0	7	15	63.0	7	15	38.5	6	7.5	6	6.5	56.6	131	143	155	7	7	61.0	5	12	5	8.5	0
12 FT	14	16	10	10	5	6	6	6.5	53.6	34.0	34.0	38.0	7	15	61.5	7	15	38.5	6	7	6	7	54.6	132	144	156	7	6.5	60.5	5	12	5	8	0
14 FT	16	17	10	10	6	8	6	7	58.0	36.0	36.0	40.0	7	15	69.0	7	15	46.5	6	7	6	6.5	53.3	133	145	157	7	6.5	60.5	5	12	5	8	0
16 FT	17	19	11	10	6	7.5	6	7	57.5	37.0	37.0	41.0	7	15	68.5	7	15	46.0	6	6.5	6	8	52.4	135	147	159	7	7	60.5	5	12	5	7.5	0
18 FT	18	20	12	10	6	7	6	7.5	57.4	38.0	38.0	38.0	7	14	68.0	7	14	46.0	6	6.5	5	6	48.8	136	148	160	7	6.5	60.5	5	12	5	7	0
20 FT	19	21	12	10	6	6.5	6	7	56.6	39.0	39.0	43.0	7	14	67.5	7	14	46.0	6	6	6	8	51.1	137	149	161	7	6.5	60.5	5	12	5	7	0
22 FT	21	23	12	10	6	6	6	6.5	56.1	41.0	41.0	45.0	7	14	66.5	7	14	45.5	6	6	6	7.5	51.0	139	151	163	7	6.5	60.5	5	12	5	7	0
24 FT	22	24	13	10	6	6	6	7	56.5	42.0	42.0	46.0	7	14	66.0	7	14	45.5	6	6	6	8	51.1	140	152	164	7	6.5	60.5	5	12	5	6.5	0
26 FT	23	25	13	10	7	7.5	6	6.5	56.3	43.0	43.0	47.0	7	14	65.5	7	14	45.5	7	7.5	6	7.5	51.0	141	153	165	7	6.5	60.5	5	12	5	6.5	0
28 FT	24	26	13	10	7	7.5	6	6.5	54.4	44.0	44.0	48.0	7	14	64.5	7	14	45.0	7	7.5	6	8	49.1	142	154	166	7	6.5	60.0	5	12	5	6.5	0
30 FT	25	28	13	10	7	7	6	6	54.4	45.0	45.0	49.0	7	14	64.0	7	14	45.0	7	8	6	8	49.3	144	156	168	7	6	60.0	5	12	5	6.5	0
32 FT	26	29	14	10	7	7	6	6.5	55.1	46.0	50.0	50.0	7	13	63.5	7	13	44.0	7	7.5	6	8.5	49.8	145	157	169	8	7.5	66.0	5	12	5	6	0
34 FT	27	30	14	10	7	6.5	6	6	55.0	47.0	51.0	51.0	7	13	62.5	7	13	43.0	7	7.5	6	8	49.8	146	158	170	8	7.5	66.0	5	12	5	6	0
36 FT	28	31	15	10	7	6.5	6	6.5	55.8	52.0	52.0	52.0	7	12	61.5	7	12	42.5	7	7	6	7.5	50.3	147	159	171	8	7	66.0	5	12	6	8	0
38 FT	29	32	15	10	7	6	6	6	55.6	53.0	53.0	53.0	7	12	60.5	7	12	41.5	7	7	6	7.5	50.4	148	160	172	8	7	66.0	5	12	6	8	0
40 FT	30	33	16	10	7	6	6	6	56.4	54.0	54.0	54.0	7	12	59.5	7	12	41.0	7	6.5	6	7	50.8	149	161	173	8	6.5	66.0	5	12	6	8	0
42 FT	31	35	16	10	7	6	6	6	56.5	55.0	55.0	55.0	8	15	67.0	8	15	48.0	7	7	6	6.5	51.0	151	163	175	8	6.5	66.0	5	12	6	8	0
44 FT	31	35	16	10	8	7	7	7.5	61.4	55.0	55.0	55.0	8	14	67.0	8	14	48.5	7	6	6	6.5	50.9	151	163	175	8	6.5	66.0	5	12	6	8	0
46 FT	32	36	17	10	8	7.5	6	6	57.1	56.0	56.0	56.0	8	14	66.5	8	14	47.5	7	6	6	6.5	51.4	152	164	176	8	6	66.0	5	12	6	7.5	0
48 FT	33	37	17	10	8	7	7	7.5	62.1	57.0	57.0	57.0	8	14	66.0	8	14	47.0	7	6	6	6.5	51.5	153	165	177	8	6	66.0	5	12	6	7.5	0
50 FT	34	38	17	10	8	7	7	7	62.1	58.0	58.0	58.0	8	14	65.5	8	14	46.5	7	6	6	6	51.8	154	166	178	8	6	66.0	5	12	6	7.5	0

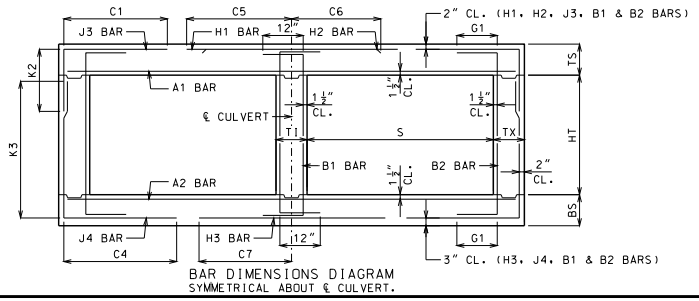

BAR DIMENSIONS DIAGRAM
SYMMETRICAL ABOUT ℄ CULVERT.

GENERAL NOTES:

IF DESIGN FILL IS BETWEEN TABULATED DESIGN FILLS, USE THE NEXT GREATER TABULATED DESIGN FILL, EXCEPT FOR DESIGN FILLS BETWEEN 2 FEET AND 4 FEET. FOR DESIGN FILLS BETWEEN 2 FEET AND 4 FEET USE THE GREATER MEMBER THICKNESS, AREA OF REINFORCEMENT AND BAR DIMENSIONS FROM THE 2 FEET AND 4 FEET TABULATED DESIGN FILLS. AREA OF REINFORCEMENT EQUALS BAR AREA PER FOOT SPACING.

SPECIAL DESIGNS ARE REQUIRED WHEN THE DESIGN FILL IS LESS THAN 1 FOOT OR GREATER THAN 50 FEET.

DIMENSIONS ARE IN INCHES UNLESS OTHERWISE SPECIFIED.

DESIGN FILLS ARE MEASURED FROM THE TOP OF TOP SLAB TO THE TOP OF EARTH FILL OR ROADWAY.

CULVERTS MEET STRENGTH AND SERVICEABILITY REQUIREMENTS FOR THE DESIGN VEHICULAR LIVE LOAD HL-93 MINUS THE LANE LOAD.

MISSOURI HIGHWAYS AND TRANSPORTATION COMMISSION
105 WEST CAPITOL
JEFFERSON CITY, MO 65102
1-888-ASK-MODOT (1-888-275-6636)

STATE OF MISSOURI
DENNIS W. HECKMAN
NUMBER PE-27141
PROFESSIONAL ENGINEER
THIS SHEET HAS BEEN SIGNED, SEALED AND DATED ELECTRONICALLY.

CONCRETE DOUBLE BOX CULVERT

MEMBER THICKNESS
BAR SIZE, SPACING & DIMENSIONS

SPAN (S): 13 FEET
HEIGHT (HT): 7 THRU 12 FEET

DATE EFFECTIVE: 10/01/2011
DATE PREPARED: 9/8/2011

703.47

SHEET NO.
20 OF 27

IF A SEAL IS PRESENT ON THIS SHEET IT HAS BEEN ELECTRONICALLY SEALED AND DATED.

SPAN (S) = 13 FT HEIGHT (HT) = 13 FT OR 14 FT

DESIGN FILL	MEMBER THICKNESS				TOP SLAB BARS												BOTTOM SLAB BARS										WALL BARS				
					A1 BARS		J3 BARS					H1 BARS			H2 BARS			A2 BARS		J4 BARS					H3 BARS			B1 BARS		B2 BARS		
										K2											K3										
	TS	BS	TX	TI	SIZE	SPA.	SIZE	SPA.	C1	HT=13'	HT=14'	SIZE	SPA.	C5	SIZE	SPA.	C6	SIZE	SPA.	SIZE	SPA.	C4	HT=13'	HT=14'	SIZE	SPA.	C7	SIZE	SPA.	SIZE	SPA.	G1
1 FT	14	11	11	11	5	6	5	7	64.1	34.0	34.0	5	12	127.5	5	12	36.5	5	6.5	5	6	85.3	163	175	6	6	60.5	5	12	5	8	12
2 FT	15	12	11	11	6	8	5	7	68.1	35.0	35.0	6	16	131.5	6	16	43.5	5	6.5	5	6	80.9	164	176	6	6.5	60.0	5	12	5	7.5	12
4 FT	11	12	11	11	5	6	5	6	92.9	31.0	31.0	6	13	82.5	6	13	38.0	5	6	5	6	75.5	164	176	7	7	62.5	5	11.5	5	7.5	12
6 FT	11	12	11	11	5	6	6	7.5	74.6	31.0	35.0	6	12	64.5	6	12	37.0	5	6	6	6.5	72.1	164	176	7	6.5	61.5	5	12	5	7.5	12
8 FT	12	14	11	11	5	6.5	6	7.5	68.5	32.0	36.0	6	12	61.5	6	12	36.5	6	8	6	7	70.1	166	178	7	7	61.5	5	12	5	7.5	0
10 FT	13	15	11	11	5	6.5	6	7	65.9	37.0	37.0	6	12	59.5	6	12	36.0	6	7.5	6	6.5	67.4	167	179	7	6.5	61.0	5	12	5	7.5	0
12 FT	14	16	12	11	5	6	6	7	64.0	38.0	38.0	7	15	61.5	7	15	38.5	6	7	6	7	65.5	168	180	7	6.5	60.5	5	12	5	7	0
14 FT	15	17	12	11	6	7.5	6	6.5	68.5	39.0	39.0	7	15	69.0	7	15	46.5	6	6.5	6	6	64.1	169	181	7	6.5	60.5	5	12	5	7	0
16 FT	17	19	13	11	6	7.5	6	6.5	68.0	41.0	41.0	7	15	68.0	7	15	46.5	6	6.5	6	7	63.4	171	183	7	6.5	60.5	5	12	5	6.5	0
18 FT	18	20	13	11	6	7	6	6	66.9	42.0	42.0	7	15	67.5	7	15	46.5	6	6	6	6	62.4	172	184	7	6.5	60.5	5	12	5	6.5	0
20 FT	19	22	14	11	6	6.5	6	6	66.5	43.0	43.0	7	14	67.0	7	14	46.0	6	6	6	7	62.0	174	186	7	7	60.5	5	12	5	6	0
22 FT	20	23	14	11	6	6	7	8	70.6	44.0	44.0	7	14	66.5	7	14	46.0	6	6	6	6	61.3	175	187	7	6.5	60.5	5	12	5	6	0
24 FT	22	25	15	11	6	6	6	6	66.1	46.0	46.0	7	15	65.5	7	15	45.5	6	6	6	7	61.5	177	189	7	6.5	60.5	5	12	6	8	0
26 FT	23	25	15	11	7	7.5	7	7.5	70.6	47.0	47.0	7	14	65.0	7	14	45.5	7	7	6	6	60.9	177	189	7	6.5	60.5	5	12	6	8	0
28 FT	24	27	16	11	7	7.5	7	8	71.0	48.0	48.0	7	14	64.5	7	14	45.0	7	8	6	7	61.3	179	191	7	6	60.5	5	12	6	8	0
30 FT	25	28	16	11	7	7	7	8	68.5	49.0	49.0	7	14	63.5	7	14	44.0	7	7.5	6	7	58.9	180	192	7	6	60.5	5	12	6	8	0
32 FT	26	29	16	11	7	7	7	7.5	68.4	50.0	50.0	7	13	62.5	7	13	43.5	7	7.5	6	6.5	58.9	181	193	8	7.5	66.5	5	12	6	8	0
34 FT	27	30	17	11	7	6.5	7	7.5	69.0	51.0	51.0	7	13	61.5	7	13	42.5	7	7.5	6	7	59.1	182	194	8	7.5	66.5	5	12	6	7.5	0
36 FT	27	31	17	11	7	6	7	6.5	68.9	51.0	51.0	7	12	61.5	7	12	43.5	7	7	6	7	59.1	183	195	8	7	66.5	5	12	6	7.5	0
38 FT	28	33	18	11	7	6	7	7	69.8	52.0	52.0	7	12	60.0	7	12	42.5	7	7	6	6.5	59.6	185	197	8	6.5	66.5	5	12	6	7	0
40 FT	29	34	19	11	7	6	7	7	70.4	53.0	53.0	7	12	59.5	7	12	41.5	7	7	6	6.5	60.0	186	198	8	6.5	66.5	5	12	6	6.5	0
42 FT	30	35	19	11	7	6	7	6.5	70.4	54.0	54.0	7	12	59.0	7	12	40.5	7	7	6	6.5	60.1	187	199	8	6.5	66.5	5	12	6	6.5	0
44 FT	31	36	20	11	7	6	7	7	71.0	55.0	55.0	8	15	66.5	8	15	47.5	7	7	6	6	60.5	188	200	8	6	66.5	5	12	6	6.5	0
46 FT	32	37	21	11	8	7.5	7	7	71.8	56.0	56.0	8	15	66.0	8	15	47.0	7	6.5	6	6	60.8	189	201	8	6	66.5	5	12	6	6	0
48 FT	32	38	21	11	8	7	7	6	71.8	56.0	56.0	8	14	66.0	8	14	47.0	7	6.5	6	6	60.9	190	202	8	6	66.5	5	12	6	6	0
50 FT	33	39	22	11	8	7	7	6.5	72.5	57.0	57.0	8	15	65.5	8	15	47.0	7	6.5	6	6	61.3	191	203	8	6	66.5	5	12	6	6	0

SPAN (S) = 13 FT HEIGHT (HT) = 15 FT OR 16 FT

DESIGN FILL	MEMBER THICKNESS				TOP SLAB BARS												BOTTOM SLAB BARS										WALL BARS				
					A1 BARS		J3 BARS					H1 BARS			H2 BARS			A2 BARS		J4 BARS					H3 BARS			B1 BARS		B2 BARS		
										K2											K3										
	TS	BS	TX	TI	SIZE	SPA.	SIZE	SPA.	C1	HT=15'	HT=16'	SIZE	SPA.	C5	SIZE	SPA.	C6	SIZE	SPA.	SIZE	SPA.	C4	HT=15'	HT=16'	SIZE	SPA.	C7	SIZE	SPA.	SIZE	SPA.	G1
1 FT	14	12	12	13	5	6	5	6	65.0	34.0	34.0	5	12	128.5	5	12	36.0	5	6.5	6	7	99.8	188	200	6	6.5	61.0	5	12	5	7	12
2 FT	15	13	12	13	6	8	6	8.5	72.0	35.0	39.0	6	16	135.5	6	16	43.5	5	6.5	6	7	96.4	189	201	6	6.5	60.5	5	12	5	7	12
4 FT	11	13	12	13	5	6	6	7	115.0	35.0	35.0	6	14	81.0	6	14	38.5	5	6	6	6.5	91.6	189	201	6	6	60.5	5	12	5	7	12
6 FT	11	13	12	13	5	6.5	6	6.5	84.8	35.0	35.0	6	13	63.5	6	13	37.5	5	6	6	6	84.8	189	201	7	7	62.0	5	12	5	6.5	12
8 FT	12	14	13	13	5	6.5	6	7	78.8	36.0	36.0	6	13	61.0	6	13	37.0	6	8	6	6.5	80.6	190	202	7	7	61.5	5	12	5	6.5	0
10 FT	13	15	13	13	5	6.5	6	7	75.9	37.0	37.0	6	12	59.5	6	12	36.5	6	7.5	6	6.5	78.4	191	203	7	6.5	61.0	5	12	5	6.5	0
12 FT	14	16	14	13	5	6	6	7	72.9	38.0	38.0	6	12	58.5	6	12	36.5	6	6.5	6	6.5	75.6	192	204	7	6.5	61.0	5	12	5	6	0
14 FT	15	18	14	13	6	8	6	6	77.1	39.0	39.0	7	16	69.0	7	16	47.0	6	6.5	6	6	75.3	194	206	7	7	61.0	5	12	5	6	0
16 FT	16	19	15	13	6	7.5	6	6	76.0	40.0	40.0	7	15	68.0	7	15	47.0	6	6.5	6	6	73.3	195	207	7	6.5	61.0	5	12	6	8	0
18 FT	18	20	16	13	6	7	6	6	76.0	42.0	42.0	7	15	67.5	7	15	47.0	6	6	6	6	71.6	196	208	7	6.5	61.0	5	12	6	8	0
20 FT	19	22	16	13	6	6.5	7	8	80.4	43.0	49.0	7	15	67.5	7	15	47.0	6	6	7	7.5	74.5	198	210	7	7	61.0	5	12	6	8	0
22 FT	20	23	17	13	6	6.5	7	8	79.9	44.0	50.0	7	14	67.0	7	14	46.5	6	6	7	7.5	73.9	199	211	7	6.5	61.0	5	12	6	7.5	0
24 FT	21	24	17	13	6	6	7	7.5	79.6	45.0	51.0	7	14	66.5	7	14	46.5	7	7	7	7	73.6	200	212	7	6.5	61.0	5	12	6	7.5	0
26 FT	23	26	18	13	7	7.5	7	7.5	80.1	47.0	53.0	7	15	65.5	7	15	46.0	7	8	7	8	73.9	202	214	7	6.5	61.0	5	12	6	7	0
28 FT	23	27	19	13	7	7.5	7	7.5	80.0	47.0	47.0	7	14	65.0	7	14	46.0	7	7.5	6	6	70.9	203	215	7	6	61.0	5	12	6	6.5	0
30 FT	24	28	19	13	7	7.5	7	7.5	77.8	48.0	48.0	7	14	64.5	7	14	46.0	7	7.5	6	6	68.5	204	216	7	6	61.0	5	12	6	6.5	0
32 FT	25	29	19	13	7	7	7	7	77.8	49.0	49.0	7	14	63.5	7	14	45.5	7	7.5	6	6	68.6	205	217	8	7.5	67.0	5	12	6	6.5	0
34 FT	26	30	20	13	7	7	7	7	78.3	50.0	50.0	7	13	63.0	7	13	44.5	7	6.5	6	6	68.9	206	218	8	7.5	67.0	5	12	6	6.5	0
36 FT	27	32	21	13	7	6.5	7	7	78.9	51.0	51.0	7	13	62.0	7	13	43.5	7	7	6	6	69.4	208	220	8	7	67.0	5	12	6	6	0
38 FT	28	33	22	13	7	6.5	7	7	79.4	52.0	58.0	7	12	61.0	7	12	43.0	7	7	7	7.5	72.6	209	221	8	6.5	67.0	5	12	6	6	0
40 FT	29	34	22	13	7	6.5	7	6.5	79.5	59.0	59.0	7	12	60.0	7	12	42.0	7	7	7	7.5	72.9	210	222	8	6.5	67.0	5	12	6	6	0
42 FT	30	35	23	13	7	6	7	6.5	80.1	60.0	60.0	7	12	60.0	7	12	41.0	7	7	7	7.5	73.1	211	223	8	6.5	67.0	5	12	7	7.5	0
44 FT	31	36	24	13	7	6	7	6.5	80.8	55.0	61.0	8	15	67.5	8	15	48.5	7	6.5	7	7	73.5	212	224	8	6	67.0	5	12	7	7.5	0
46 FT	32	37	24	13	7	6	7	6	80.8	56.0	62.0	8	15	67.0	8	15	48.0	7	6.5	7	7	73.6	213	225	8	6	67.0	5	12	7	7.5	0
48 FT	32	38	26	13	8	7.5	7	6	81.9	56.0	62.0	8	14	67.0	8	14	48.0	7	6.5	7	7.5	74.1	214	226	8	6	67.0	5	12	7	7.5	0
50 FT	33	39	27	13	8	7	7	6	82.6	57.0	63.0	8	15	66.0	8	15	47.5	7	6.5	7	7.5	74.5	215	227	8	6	67.0	5	12	7	8	0

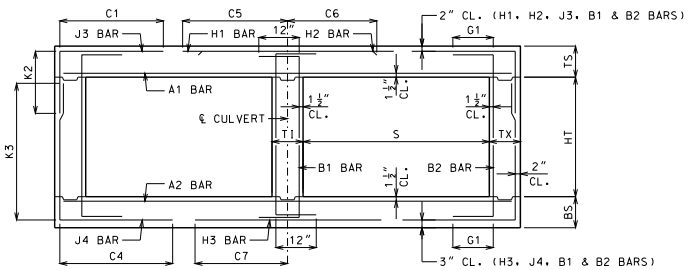

BAR DIMENSIONS DIAGRAM
SYMMETRICAL ABOUT ℄ CULVERT.

GENERAL NOTES:

IF DESIGN FILL IS BETWEEN TABULATED DESIGN FILLS, USE THE NEXT GREATER TABULATED DESIGN FILL, EXCEPT FOR DESIGN FILLS BETWEEN 2 FEET AND 4 FEET. FOR DESIGN FILLS BETWEEN 2 FEET AND 4 FEET USE THE GREATER MEMBER THICKNESS, AREA OF REINFORCEMENT AND BAR DIMENSIONS FROM THE 2 FEET AND 4 FEET TABULATED DESIGN FILLS. AREA OF REINFORCEMENT EQUALS BAR AREA PER FOOT SPACING.

SPECIAL DESIGNS ARE REQUIRED WHEN THE DESIGN FILL IS LESS THAN 1 FOOT OR GREATER THAN 50 FEET.

DIMENSIONS ARE IN INCHES UNLESS OTHERWISE SPECIFIED.

DESIGN FILLS ARE MEASURED FROM THE TOP OF TOP SLAB TO THE TOP OF EARTH FILL OR ROADWAY.

CULVERTS MEET STRENGTH AND SERVICEABILITY REQUIREMENTS FOR THE DESIGN VEHICULAR LIVE LOAD HL-93 MINUS THE LANE LOAD.

MISSOURI HIGHWAYS AND TRANSPORTATION COMMISSION
105 WEST CAPITOL
JEFFERSON CITY, MO 65102
1-888-ASK-MODOT (1-888-275-6636)

STATE OF MISSOURI
DENNIS W. HECKMANN
NUMBER PE-27141
PROFESSIONAL ENGINEER
THIS SHEET HAS BEEN SIGNED, SEALED AND DATED ELECTRONICALLY.

CONCRETE DOUBLE BOX CULVERT

MEMBER THICKNESS
BAR SIZE, SPACING & DIMENSIONS

SPAN (S): 13 FEET
HEIGHT (HT): 13 THRU 16 FEET

DATE EFFECTIVE: 10/01/2011
DATE PREPARED: 9/8/2011

703.47

SHEET NO.
21 OF 27

IF A SEAL IS PRESENT ON THIS SHEET IT HAS BEEN ELECTRONICALLY SEALED AND DATED.

SPAN (S) = 14 FT HEIGHT (HT) = 7 FT OR 8 FT OR 9 FT

DESIGN FILL	MEMBER THICKNESS				TOP SLAB BARS												BOTTOM SLAB BARS												WALL BARS				
					A1 BARS		J3 BARS			K2			H1 BARS			H2 BARS			A2 BARS		J4 BARS			K3			H3 BARS			B1 BARS		B2 BARS	
	TS	BS	TX	TI	SIZE	SPA.	SIZE	SPA.	C1	HT=7′	HT=8′	HT=9′	SIZE	SPA.	C5	SIZE	SPA.	C6	SIZE	SPA.	SIZE	SPA.	C4	HT=7′	HT=8′	HT=9′	SIZE	SPA.	C7	SIZE	SPA.	SIZE	SPA.	G1
1 FT	15	11	8	8	6	8	5	8	69.3	31.0	35.0	35.0	6	16	137.5	6	16	46.5	5	6.5	5	6	57.8	91	103	115	6	6	63.0	5	12	5	12	12
2 FT	15	12	8	8	6	8	5	8	69.3	35.0	35.0	35.0	6	16	137.5	6	16	48.0	5	6	5	6.5	52.5	92	104	116	6	6	62.5	5	12	5	12	12
4 FT	12	11	8	8	6	7.5	5	6	48.0	32.0	32.0	32.0	6	12	86.0	6	12	39.5	5	6.5	6	7	49.3	91	103	115	7	6	64.5	5	12	5	12	12
6 FT	12	13	8	8	6	8	6	7.5	47.6	32.0	32.0	32.0	7	15	74.0	7	15	41.0	5	6	5	7	41.9	93	105	117	7	6.5	64.5	5	12	5	12	12
8 FT	13	14	8	8	5	6	5	6.5	41.1	33.0	33.0	33.0	7	15	68.5	7	15	40.0	6	8	5	7.5	39.1	94	106	118	7	6.5	64.0	5	12	5	12	0
10 FT	14	15	8	8	6	8	5	6.5	38.6	34.0	34.0	34.0	7	14	66.5	7	14	39.5	6	7.5	5	7.5	37.4	95	107	119	7	6	63.5	5	12	5	12	0
12 FT	16	17	8	8	6	8	5	6.5	41.5	36.0	36.0	36.0	7	14	73.0	7	14	47.5	6	7	5	7	36.1	97	109	121	7	6.5	63.5	5	12	5	11	0
14 FT	17	18	8	8	6	7.5	5	6	40.3	37.0	37.0	37.0	7	14	72.5	7	14	47.0	6	6.5	5	6.5	35.1	98	110	122	7	6.5	63.0	5	12	5	10	0
16 FT	18	20	8	8	6	7	6	8	43.4	38.0	38.0	38.0	7	13	71.5	7	13	47.0	6	6	5	6	34.4	100	112	124	7	6.5	63.0	5	12	5	9.5	0
18 FT	20	21	8	8	6	6.5	6	7.5	42.4	44.0	44.0	44.0	7	13	71.0	7	13	46.5	6	6	6	7.5	37.0	101	113	125	7	6.5	63.0	5	12	5	9.5	0
20 FT	21	22	8	8	6	6	6	7	41.8	45.0	45.0	45.0	7	13	70.5	7	13	46.5	7	7.5	6	7	36.5	102	114	126	7	6	63.0	5	12	5	9	0
22 FT	23	24	8	8	7	7.5	6	6	41.3	47.0	47.0	47.0	7	13	69.5	7	13	46.5	7	7.5	6	6	36.4	104	116	128	7	6	63.0	5	12	5	8	0
24 FT	24	26	9	8	7	7.5	6	7	42.1	48.0	48.0	48.0	7	13	69.0	7	13	46.0	7	7.5	6	6.5	36.8	106	118	130	7	6.5	63.0	5	12	5	8.5	0
26 FT	25	27	9	8	7	7	6	6.5	41.9	49.0	49.0	49.0	7	12	68.5	7	12	46.0	7	7.5	6	6.5	36.6	107	119	131	7	6	63.0	5	12	5	8	0
28 FT	26	28	9	8	7	7	6	6	41.8	50.0	50.0	50.0	7	12	68.0	7	12	46.0	7	7.5	6	6	36.6	108	120	132	7	6	63.0	5	12	5	7.5	0
30 FT	27	29	9	8	7	6.5	6	6	41.1	51.0	51.0	51.0	7	12	67.0	7	12	45.5	7	7	6	6	35.4	109	121	133	8	7.5	68.5	5	12	5	7.5	0
32 FT	28	31	10	8	7	6.5	6	6.5	41.8	52.0	52.0	52.0	7	12	66.0	7	12	45.0	7	7	6	6	35.9	111	123	135	8	7	68.5	5	12	5	8	0
34 FT	29	32	10	8	7	6	6	6.5	41.8	53.0	53.0	53.0	7	12	65.5	7	12	44.5	7	7	6	6	36.0	112	124	136	8	7	68.5	5	12	5	7.5	0
36 FT	31	33	10	8	7	6	6	6	41.8	55.0	55.0	55.0	8	15	71.5	8	15	50.5	7	7	7	6.5	39.4	113	125	137	8	6.5	68.5	5	12	5	6.5	0
38 FT	31	34	11	8	8	7	6	6.5	42.3	55.0	55.0	55.0	8	14	71.5	8	14	51.0	7	6.5	6	6	36.8	114	126	138	8	6.5	68.5	5	12	5	7.5	0
40 FT	33	35	11	8	8	7.5	6	6	42.3	57.0	57.0	57.0	8	14	69.5	8	14	49.0	7	6	6	6	37.0	115	127	139	8	6.5	68.5	5	12	5	7	0
42 FT	33	37	11	8	8	7	6	6	42.3	57.0	57.0	57.0	8	14	69.5	8	14	49.5	7	6.5	7	6.5	40.1	117	129	141	8	6	68.5	5	12	5	6.5	0
44 FT	34	38	12	8	8	7	6	6.5	43.3	58.0	58.0	58.0	8	14	69.0	8	14	48.5	7	6.5	6	6	37.6	118	130	142	8	6	68.5	5	12	5	7	0
46 FT	35	39	12	8	8	6.5	6	6.5	43.1	59.0	59.0	59.0	8	13	68.5	8	13	47.5	7	6.5	6	6	37.9	119	131	143	8	6	68.5	5	12	5	6.5	0
48 FT	36	40	12	8	8	6.5	6	6.5	43.1	60.0	60.0	60.0	8	13	67.5	8	13	46.5	7	6.5	6	6	38.1	120	132	144	9	7	74.5	5	11.5	5	6	0
50 FT	37	41	12	8	8	6.5	6	6	43.3	61.0	61.0	61.0	8	13	67.0	8	13	46.5	7	6	7	6.5	41.3	121	133	145	9	7	74.5	5	8.5	6	8	0

SPAN (S) = 14 FT HEIGHT (HT) = 10 FT OR 11 FT OR 12 FT

DESIGN FILL	MEMBER THICKNESS				TOP SLAB BARS												BOTTOM SLAB BARS												WALL BARS				
					A1 BARS		J3 BARS			K2			H1 BARS			H2 BARS			A2 BARS		J4 BARS			K3			H3 BARS			B1 BARS		B2 BARS	
	TS	BS	TX	TI	SIZE	SPA.	SIZE	SPA.	C1	HT=10′	HT=11′	HT=12′	SIZE	SPA.	C5	SIZE	SPA.	C6	SIZE	SPA.	SIZE	SPA.	C4	HT=10′	HT=11′	HT=12′	SIZE	SPA.	C7	SIZE	SPA.	SIZE	SPA.	G1
1 FT	15	12	8	10	6	8	5	7	69.6	35.0	35.0	35.0	6	16	138.5	6	16	47.0	5	6.5	6	6	83.9	128	140	152	6	6.5	63.5	5	12	5	9.5	12
2 FT	15	13	8	10	6	8	5	6.5	69.6	35.0	35.0	35.0	6	16	138.5	6	16	48.0	5	6	6	6	77.4	129	141	153	6	6.5	63.0	5	12	5	9.5	12
4 FT	12	12	10	10	6	8	5	6	70.1	32.0	32.0	32.0	6	13	85.5	6	13	40.0	5	6	6	7	65.5	128	140	152	7	6.5	65.5	5	10	5	9.5	12
6 FT	12	13	10	10	6	8.5	5	6	58.6	32.0	32.0	32.0	6	12	69.0	6	12	38.0	5	6	6	7	60.8	129	141	153	7	6.5	64.5	5	12	5	9.5	12
8 FT	13	14	10	10	5	6	6	7	57.1	33.0	33.0	37.0	7	15	68.0	7	15	40.5	6	8	6	7	57.4	130	142	154	7	6.5	64.0	5	12	5	9	0
10 FT	14	16	10	10	5	6	6	7	54.4	34.0	34.0	34.0	7	15	66.5	7	15	40.0	6	7	5	6	52.0	132	144	156	7	6.5	64.0	5	12	5	8	0
12 FT	15	17	10	10	6	8	6	7	58.6	35.0	35.0	39.0	7	14	73.0	7	14	48.0	6	7	6	7.5	53.1	133	145	157	7	6.5	63.5	5	12	5	8	0
14 FT	17	18	10	10	6	7.5	6	7	57.1	37.0	37.0	41.0	7	14	72.5	7	14	47.5	6	6.5	6	6.5	52.0	134	146	158	7	6.5	63.5	5	12	5	8	0
16 FT	18	20	11	10	6	7	6	7	57.0	38.0	38.0	42.0	7	14	71.5	7	14	47.5	6	6	6	8	51.5	136	148	160	7	6.5	63.5	5	12	5	7.5	0
18 FT	19	21	12	10	6	6.5	6	7	56.9	39.0	39.0	43.0	7	13	71.0	7	13	47.5	6	6	6	8.5	51.1	137	149	161	7	6.5	63.5	5	12	5	7	0
20 FT	21	23	12	10	6	6	6	7	56.1	41.0	41.0	45.0	7	13	70.5	7	13	47.0	7	8	6	8	50.8	139	151	163	7	6.5	63.5	5	12	5	7	0
22 FT	22	24	12	10	6	6	6	6.5	55.5	42.0	42.0	46.0	7	13	70.0	7	13	47.0	7	7.5	6	7.5	50.1	140	152	164	7	6.5	63.5	5	12	5	7	0
24 FT	23	26	13	10	7	7	6	6.5	55.9	43.0	43.0	47.0	7	12	69.5	7	12	47.0	7	7.5	6	8.5	50.3	142	154	166	7	6.5	63.5	5	12	5	6.5	0
26 FT	25	27	13	10	7	7	6	6.5	55.5	45.0	45.0	49.0	7	13	68.5	7	13	46.5	7	7.5	6	8	50.3	143	155	167	7	6	63.5	5	12	5	6.5	0
28 FT	26	29	14	10	7	7	6	6.5	56.3	46.0	50.0	50.0	7	13	67.5	7	13	46.5	7	7.5	6	8.5	50.5	145	157	169	8	7.5	69.5	5	12	5	6	0
30 FT	27	30	14	10	7	6.5	6	6.5	56.0	47.0	51.0	51.0	7	13	67.0	7	13	46.0	7	7	6	8	50.5	146	158	170	8	7.5	69.5	5	12	5	6	0
32 FT	28	31	14	10	7	6.5	6	6.5	54.3	52.0	52.0	52.0	7	12	66.0	7	12	45.5	7	7	6	7.5	48.9	147	159	171	8	7	69.5	5	12	5	6	0
34 FT	29	32	14	10	7	6	6	6	54.1	53.0	53.0	53.0	7	12	65.0	7	12	44.5	7	7	6	7.5	48.9	148	160	172	8	7	69.0	5	12	5	6	0
36 FT	30	33	15	10	7	6	6	6.5	54.9	54.0	54.0	54.0	7	12	64.0	7	12	44.0	7	6	6	7	49.4	149	161	173	8	6.5	69.5	5	12	6	8	0
38 FT	31	35	15	10	8	7.5	6	6	55.0	55.0	55.0	55.0	8	15	71.0	8	15	51.0	7	6.5	6	6.5	49.6	151	163	175	8	6.5	69.0	5	12	6	8	0
40 FT	32	36	16	10	8	7.5	6	6	55.8	56.0	56.0	56.0	8	14	70.0	8	14	50.0	7	6.5	6	6.5	50.0	152	164	176	8	6	69.5	5	12	6	8	0
42 FT	33	37	16	10	8	7	6	6	55.8	57.0	57.0	57.0	8	14	69.5	8	14	49.5	7	6.5	6	6.5	50.1	153	165	177	8	6	69.0	5	12	6	8	0
44 FT	34	38	16	10	8	7	6	6	55.6	58.0	58.0	58.0	8	14	69.0	8	14	48.5	7	6.5	6	6	50.3	154	166	178	8	6	69.0	5	12	6	8	0
46 FT	35	39	17	10	8	7	6	6	56.5	59.0	59.0	59.0	8	13	68.5	8	13	47.5	7	6	6	6	50.8	155	167	179	8	6	69.0	5	12	6	7.5	0
48 FT	35	40	17	10	8	6	7	7.5	61.5	59.0	59.0	59.0	8	12	68.5	8	12	48.0	7	6	6	6	50.8	156	168	180	9	7	75.0	5	12	6	7.5	0
50 FT	36	41	17	10	8	6.5	7	7	61.5	60.0	60.0	66.0	8	13	68.0	8	13	47.5	7	6	7	8	53.9	157	169	181	9	7	75.0	5	12	6	7.5	0

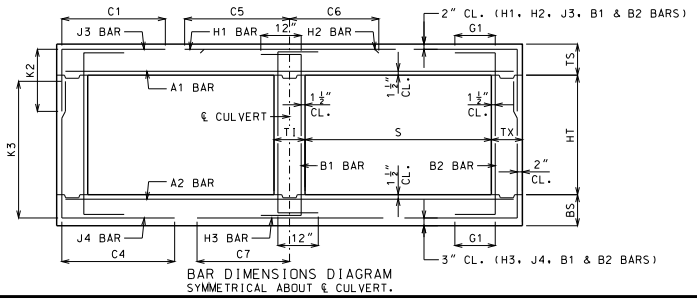

BAR DIMENSIONS DIAGRAM
SYMMETRICAL ABOUT ℄ CULVERT.

GENERAL NOTES:

IF DESIGN FILL IS BETWEEN TABULATED DESIGN FILLS, USE THE NEXT GREATER TABULATED DESIGN FILL, EXCEPT FOR DESIGN FILLS BETWEEN 2 FEET AND 4 FEET. FOR DESIGN FILLS BETWEEN 2 FEET AND 4 FEET USE THE GREATER MEMBER THICKNESS, AREA OF REINFORCEMENT AND BAR DIMENSIONS FROM THE 2 FEET AND 4 FEET TABULATED DESIGN FILLS. AREA OF REINFORCEMENT EQUALS BAR AREA PER FOOT SPACING.

SPECIAL DESIGNS ARE REQUIRED WHEN THE DESIGN FILL IS LESS THAN 1 FOOT OR GREATER THAN 50 FEET.

DIMENSIONS ARE IN INCHES UNLESS OTHERWISE SPECIFIED.

DESIGN FILLS ARE MEASURED FROM THE TOP OF TOP SLAB TO THE TOP OF EARTH FILL OR ROADWAY.

CULVERTS MEET STRENGTH AND SERVICEABILITY REQUIREMENTS FOR THE DESIGN VEHICULAR LIVE LOAD HL-93 MINUS THE LANE LOAD.

MISSOURI HIGHWAYS AND TRANSPORTATION COMMISSION
105 WEST CAPITOL
JEFFERSON CITY, MO 65102
1-888-ASK-MODOT (1-888-275-6636)

STATE OF MISSOURI
DENNIS W. HECKMANN
NUMBER PE-27141
PROFESSIONAL ENGINEER
THIS SHEET HAS BEEN SIGNED, SEALED AND DATED ELECTRONICALLY.

CONCRETE DOUBLE BOX CULVERT

MEMBER THICKNESS
BAR SIZE, SPACING & DIMENSIONS

SPAN (S): 14 FEET
HEIGHT (HT): 7 THRU 12 FEET

DATE EFFECTIVE: 10/01/2011
DATE PREPARED: 9/8/2011

703.47

SHEET NO.
22 OF 27

IF A SEAL IS PRESENT ON THIS SHEET IT HAS BEEN ELECTRONICALLY SEALED AND DATED.

SPAN (S) = 14 FT HEIGHT (HT) = 13 FT OR 14 FT																															
DESIGN FILL	MEMBER THICKNESS				TOP SLAB BARS													BOTTOM SLAB BARS											WALL BARS				
					A1 BARS		J3 BARS					H1 BARS			H2 BARS			A2 BARS		J4 BARS					H3 BARS			B1 BARS		B2 BARS		
	TS	BS	TX	TI	SIZE	SPA.	SIZE	SPA.	C1	K2 HT=13'	K2 HT=14'	SIZE	SPA.	C5	SIZE	SPA.	C6	SIZE	SPA.	SIZE	SPA.	C4	K3 HT=13'	K3 HT=14'	SIZE	SPA.	C7	SIZE	SPA.	SIZE	SPA.	G1
1 FT	15	12	9	11	6	8	5	6	70.4	35.0	35.0	6	16	139.0	6	16	47.0	5	6	6	6	96.1	164	176	6	6	64.0	5	12	5	8.5	12
2 FT	15	13	10	11	6	8	5	6	71.0	35.0	35.0	6	16	139.5	6	16	47.5	5	6	6	6.5	87.6	165	177	6	6.5	63.5	5	12	5	8	12
4 FT	12	12	10	11	6	7.5	6	7.5	100.0	36.0	36.0	6	13	94.5	6	13	40.0	5	6	6	6	77.9	164	176	7	6.5	65.5	5	12	5	8	12
6 FT	12	13	10	11	6	8	6	7	74.8	36.0	36.0	6	12	69.0	6	12	38.5	5	6	6	6	72.4	165	177	7	6.5	65.0	5	12	5	8	12
8 FT	13	14	11	11	5	6	6	7	68.4	37.0	37.0	7	16	68.0	7	16	41.0	6	8	6	7	68.4	166	178	7	6	64.0	5	12	5	7.5	0
10 FT	14	16	11	11	5	6	6	6.5	65.4	38.0	38.0	7	15	66.5	7	15	40.5	6	7	6	6.5	66.8	168	180	7	6.5	64.0	5	12	5	7.5	0
12 FT	15	17	12	11	6	8	6	6.5	69.4	39.0	39.0	7	14	73.0	7	14	48.0	6	7	6	7	64.6	169	181	7	6.5	64.0	5	12	5	7	0
14 FT	17	18	12	11	6	7.5	6	6.5	67.9	41.0	41.0	7	15	72.0	7	15	48.0	6	6	6	6	63.0	170	182	7	6	63.5	5	12	5	7	0
16 FT	18	20	13	11	6	7	6	6.5	66.9	42.0	42.0	7	14	71.5	7	14	47.5	6	6	6	7	62.1	172	184	7	6.5	63.5	5	12	5	6.5	0
18 FT	19	21	13	11	6	6.5	6	6	65.6	43.0	43.0	7	13	71.0	7	13	47.5	7	8	6	6	61.0	173	185	7	6.5	63.5	5	12	5	6.5	0
20 FT	21	23	14	11	6	6	6	6	65.4	45.0	45.0	7	14	70.0	7	14	47.5	7	8	6	7	60.6	175	187	7	6.5	63.5	5	12	5	6	0
22 FT	22	24	14	11	6	6	7	8	69.4	46.0	46.0	7	13	69.5	7	13	47.0	7	7	6	6	59.8	176	188	7	6.5	63.5	5	12	5	6	0
24 FT	23	26	15	11	7	7.5	7	8	69.5	47.0	47.0	7	13	69.0	7	13	47.0	7	7.5	6	7	59.5	178	190	7	6.5	63.5	5	12	6	8	0
26 FT	24	27	15	11	7	7	7	7.5	69.0	48.0	48.0	7	13	68.5	7	13	47.0	7	7	6	6.5	59.3	179	191	7	6	63.5	5	12	6	8	0
28 FT	25	29	16	11	7	6.5	7	7.5	69.5	49.0	49.0	7	13	67.5	7	13	46.5	7	7	6	7	59.5	181	193	8	7.5	69.5	5	12	6	8	0
30 FT	27	30	16	11	7	6.5	7	7	69.3	51.0	51.0	7	13	66.0	7	13	45.5	7	7	6	6.5	59.5	182	194	8	7.5	69.5	5	12	6	8	0
32 FT	28	31	16	11	7	6.5	7	7.5	67.1	52.0	52.0	7	12	65.0	7	12	44.5	7	7	6	7	57.1	183	195	8	7	69.5	5	12	6	8	0
34 FT	29	32	17	11	7	6	7	7.5	67.8	53.0	53.0	7	12	64.0	7	12	44.0	7	6.5	6	7	57.5	184	196	8	7	69.5	5	12	6	7.5	0
36 FT	30	34	17	11	7	6	7	6.5	67.8	54.0	54.0	7	12	63.0	7	12	43.0	7	7	6	7	57.6	186	198	8	6.5	69.5	5	12	6	7.5	0
38 FT	31	35	18	11	7	6	7	7	68.5	55.0	55.0	8	15	70.0	8	15	50.5	7	6.5	6	6.5	58.0	187	199	8	6.5	69.5	5	12	6	7	0
40 FT	32	36	18	11	8	7.5	7	6.5	68.4	56.0	56.0	8	14	69.5	8	14	49.5	7	6.5	6	6.5	58.1	188	200	8	6	69.5	5	12	6	7	0
42 FT	33	37	19	11	8	7	7	7	69.1	57.0	57.0	8	14	69.0	8	14	48.5	7	6.5	6	6.5	58.5	189	201	8	6	69.5	5	12	6	6.5	0
44 FT	33	38	20	11	8	7	7	7	69.9	57.0	57.0	8	14	69.0	8	14	49.0	7	6	6	6	58.9	190	202	8	6	69.5	5	12	6	6.5	0
46 FT	34	39	20	11	8	7	7	6	69.8	58.0	58.0	8	14	68.5	8	14	48.5	7	6	6	6	59.0	191	203	8	6	69.5	5	12	6	6.5	0
48 FT	35	41	21	11	8	6.5	7	6.5	70.6	65.0	65.0	8	13	68.0	8	13	47.5	7	6	7	8	62.5	193	205	9	7	75.5	5	12	6	6	0
50 FT	36	42	22	11	8	6.5	7	6.5	71.4	66.0	66.0	8	14	67.0	8	14	47.5	7	6	7	7.5	63.0	194	206	9	7	75.5	5	12	6	6	0

SPAN (S) = 14 FT HEIGHT (HT) = 15 FT OR 16 FT																															
DESIGN FILL	MEMBER THICKNESS				TOP SLAB BARS													BOTTOM SLAB BARS											WALL BARS				
					A1 BARS		J3 BARS					H1 BARS			H2 BARS			A2 BARS		J4 BARS					H3 BARS			B1 BARS		B2 BARS		
	TS	BS	TX	TI	SIZE	SPA.	SIZE	SPA.	C1	K2 HT=15'	K2 HT=16'	SIZE	SPA.	C5	SIZE	SPA.	C6	SIZE	SPA.	SIZE	SPA.	C4	K3 HT=15'	K3 HT=16'	SIZE	SPA.	C7	SIZE	SPA.	SIZE	SPA.	G1
1 FT	15	13	12	13	6	8	5	6	72.6	35.0	35.0	6	16	141.0	6	16	46.0	5	6.5	6	7.5	102.5	189	201	6	6.5	64.5	5	12	5	7	12
2 FT	15	13	12	13	6	8	6	8	75.6	35.0	39.0	6	16	144.0	6	16	47.5	5	6	6	7	95.8	189	201	6	6	63.5	5	12	5	7	12
4 FT	12	12	12	13	6	8	6	7.5	118.3	36.0	36.0	6	13	86.5	6	13	40.0	5	6	6	6	86.6	188	200	7	6.5	65.5	5	12	5	7	12
6 FT	12	13	12	13	5	6	6	7	86.4	36.0	36.0	6	12	68.0	6	12	39.0	5	6	6	6	83.0	189	201	7	6	65.0	5	12	5	7	12
8 FT	13	15	13	13	5	6	6	7	78.9	37.0	37.0	6	12	64.5	6	12	38.0	6	7.5	6	6.5	80.3	191	203	7	6.5	64.5	5	12	5	6.5	0
10 FT	14	16	13	13	5	6	6	6.5	75.0	38.0	38.0	7	15	66.0	7	15	41.0	6	7	6	6.5	77.3	192	204	7	6.5	64.5	5	12	5	6.5	0
12 FT	15	17	14	13	6	8	6	6.5	78.5	39.0	39.0	7	15	73.0	7	15	48.5	6	6.5	6	6.5	74.1	193	205	7	6.5	64.0	5	12	5	6	0
14 FT	16	19	14	13	6	8	6	6	77.0	40.0	40.0	7	14	72.0	7	14	48.5	6	6	6	6	73.6	195	207	7	6.5	64.0	5	12	5	6	0
16 FT	18	20	15	13	6	7	6	6	76.5	42.0	42.0	7	14	71.5	7	14	48.5	6	6	6	6	72.1	196	208	7	6.5	64.0	5	12	6	8	0
18 FT	19	21	15	13	6	6.5	7	7.5	80.5	43.0	49.0	7	14	71.0	7	14	48.5	7	8	7	7	74.1	197	209	7	6.5	64.0	5	12	6	8	0
20 FT	20	23	16	13	6	6.5	7	7.5	79.9	44.0	50.0	7	13	70.5	7	13	48.0	7	7.5	7	8	73.8	199	211	7	6.5	64.0	5	12	6	8	0
22 FT	22	25	17	13	6	6	7	7.5	79.8	46.0	46.0	7	14	69.5	7	14	48.0	7	7.5	6	6	70.5	201	213	7	6.5	64.0	5	12	6	7.5	0
24 FT	23	26	18	13	7	7.5	7	7.5	79.5	47.0	47.0	7	13	69.0	7	13	47.5	7	7.5	6	6	69.9	202	214	7	6.5	64.0	5	12	6	7	0
26 FT	24	27	18	13	7	7.5	7	7	79.1	48.0	48.0	7	13	68.5	7	13	47.5	7	6.5	6	6	69.6	203	215	7	6	64.0	5	12	6	7	0
28 FT	25	29	19	13	7	7	7	7	79.5	49.0	49.0	7	13	68.0	7	13	47.5	7	7	6	6	70.0	205	217	8	7.5	70.0	5	12	6	6.5	0
30 FT	26	30	20	13	7	6.5	7	7	79.8	50.0	50.0	7	13	67.0	7	13	47.0	7	6.5	6	6	69.9	206	218	8	7.5	70.0	5	12	6	6.5	0
32 FT	27	31	20	13	7	6.5	7	7	77.4	51.0	51.0	7	13	66.5	7	13	47.0	7	6.5	6	6	67.5	207	219	8	7	70.0	5	12	6	6.5	0
34 FT	28	32	20	13	7	6	7	7	77.4	52.0	52.0	7	12	65.5	7	12	46.0	7	6	6	6	67.6	208	220	8	7	70.0	5	12	6	6.5	0
36 FT	29	34	21	13	7	6	7	7	78.0	53.0	53.0	7	12	64.5	7	12	45.0	7	6.5	6	6	68.1	210	222	8	6.5	70.0	5	12	6	6	0
38 FT	30	35	22	13	7	6	7	6.5	78.6	54.0	60.0	7	12	63.5	7	12	44.5	7	6.5	7	7.5	71.4	211	223	8	6.5	70.0	5	12	6	6	0
40 FT	31	36	22	13	8	7.5	7	6	78.6	61.0	61.0	8	15	71.0	8	15	51.5	7	6.5	7	7.5	71.5	212	224	8	6	70.0	5	12	6	6	0
42 FT	32	37	23	13	8	7.5	7	6.5	79.3	56.0	62.0	8	14	70.0	8	14	51.0	7	6	7	7.5	71.8	213	225	8	6	70.0	5	12	7	7.5	0
44 FT	33	39	24	13	8	7	7	6.5	80.0	57.0	63.0	8	14	70.0	8	14	50.0	7	6	7	7	72.4	215	227	8	6	70.0	5	12	7	7.5	0
46 FT	34	40	25	13	8	7	7	6.5	80.6	58.0	64.0	8	14	69.5	8	14	49.0	7	6	7	7.5	72.6	216	228	9	7	76.0	5	12	7	7.5	0
48 FT	35	41	26	13	8	7	7	6	81.4	65.0	65.0	8	14	68.5	8	14	48.5	7	6	7	7.5	73.0	217	229	9	7	76.5	5	12	7	8	0
50 FT	35	42	27	13	8	6.5	7	6	82.0	65.0	65.0	8	13	68.5	8	13	48.5	7	6	7	7.5	73.3	218	230	9	7	76.5	5	12	7	8	0

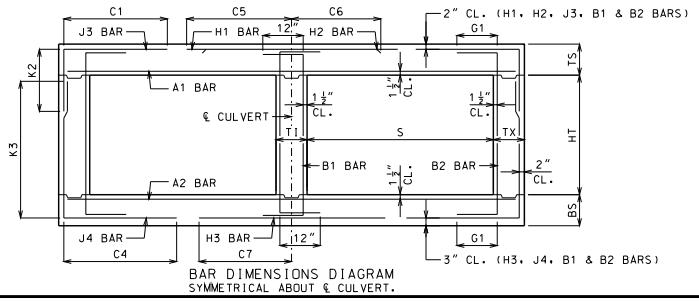

BAR DIMENSIONS DIAGRAM
SYMMETRICAL ABOUT ℄ CULVERT.

GENERAL NOTES:

IF DESIGN FILL IS BETWEEN TABULATED DESIGN FILLS, USE THE NEXT GREATER TABULATED DESIGN FILL, EXCEPT FOR DESIGN FILLS BETWEEN 2 FEET AND 4 FEET. FOR DESIGN FILLS BETWEEN 2 FEET AND 4 FEET USE THE GREATER MEMBER THICKNESS, AREA OF REINFORCEMENT AND BAR DIMENSIONS FROM THE 2 FEET AND 4 FEET TABULATED DESIGN FILLS. AREA OF REINFORCEMENT EQUALS BAR AREA PER FOOT SPACING.

SPECIAL DESIGNS ARE REQUIRED WHEN THE DESIGN FILL IS LESS THAN 1 FOOT OR GREATER THAN 50 FEET.

DIMENSIONS ARE IN INCHES UNLESS OTHERWISE SPECIFIED.

DESIGN FILLS ARE MEASURED FROM THE TOP OF TOP SLAB TO THE TOP OF EARTH FILL OR ROADWAY.

CULVERTS MEET STRENGTH AND SERVICEABILITY REQUIREMENTS FOR THE DESIGN VEHICULAR LIVE LOAD HL-93 MINUS THE LANE LOAD.

MISSOURI HIGHWAYS AND TRANSPORTATION COMMISSION
105 WEST CAPITOL
JEFFERSON CITY, MO 65102
1-888-ASK-MODOT (1-888-275-6636)

STATE OF MISSOURI
DENNIS W. HECKMAN
NUMBER PE-27141
PROFESSIONAL ENGINEER
THIS SHEET HAS BEEN SIGNED, SEALED AND DATED ELECTRONICALLY.

CONCRETE DOUBLE BOX CULVERT

MEMBER THICKNESS
BAR SIZE, SPACING & DIMENSIONS

SPAN (S): 14 FEET
HEIGHT (HT): 13 THRU 16 FEET

DATE EFFECTIVE: 10/01/2011
DATE PREPARED: 9/8/2011

703.47

SHEET NO.
23 OF 27

IF A SEAL IS PRESENT ON THIS SHEET IT HAS BEEN ELECTRONICALLY SEALED AND DATED.

SPAN (S) = 15 FT HEIGHT (HT) = 8 FT OR 9 FT OR 10 FT

DESIGN FILL	MEMBER THICKNESS				TOP SLAB BARS												BOTTOM SLAB BARS												WALL BARS				
					A1 BARS		J3 BARS			K2			H1 BARS			H2 BARS			A2 BARS		J4 BARS			K3			H3 BARS			B1 BARS		B2 BARS		
	TS	BS	TX	TI	SIZE	SPA.	SIZE	SPA.	C1	HT=8′	HT=9′	HT=10′	SIZE	SPA.	C5	SIZE	SPA.	C6	SIZE	SPA.	SIZE	SPA.	C4	HT=8′	HT=9′	HT=10′	SIZE	SPA.	C7	SIZE	SPA.	SIZE	SPA.	G1
1 FT	15	12	8	8	6	8	5	8	72.9	35.0	35.0	35.0	6	16	146.0	6	16	51.0	5	6	5	6	64.9	104	116	128	6	6	66.5	5	12	5	12	12
2 FT	17	13	8	8	6	7.5	5	6.5	72.9	37.0	37.0	37.0	6	14	146.0	6	14	45.5	5	6	5	6	57.8	105	117	129	6	6	65.5	5	12	5	12	12
4 FT	13	12	8	8	6	7	5	6	53.1	33.0	33.0	33.0	6	12	92.5	6	12	41.5	5	6	6	6.5	53.3	104	116	128	7	6	68.0	5	12	5	12	12
6 FT	13	13	8	8	6	7.5	6	7.5	50.4	33.0	33.0	37.0	7	15	78.5	7	15	42.5	5	6	6	7	48.9	105	117	129	7	6	67.0	5	12	5	12	12
8 FT	14	15	8	8	6	8	5	6	44.0	34.0	34.0	34.0	7	14	72.5	7	14	41.5	6	7.5	5	6.5	42.8	107	119	131	7	6	67.0	5	12	5	11	0
10 FT	15	16	8	8	6	7.5	6	8	50.5	35.0	35.0	35.0	7	13	78.0	7	13	49.0	6	7	5	6.5	40.9	108	120	132	7	6	66.5	5	12	5	10	0
12 FT	17	18	8	8	6	7.5	6	8	48.4	37.0	37.0	37.0	7	13	76.5	7	13	48.5	6	6.5	5	6	39.6	110	122	134	7	6	66.5	5	12	5	9.5	0
14 FT	18	19	8	8	6	7	6	7.5	47.0	38.0	38.0	42.0	7	13	75.5	7	13	48.5	6	6	6	8	41.5	111	123	135	7	6	66.5	5	12	5	9.5	0
16 FT	19	21	8	8	6	6	6	6.5	46.1	39.0	43.0	43.0	7	12	75.0	7	12	48.0	6	6	6	7	40.8	113	125	137	7	6	66.5	5	12	5	9	0
18 FT	21	22	9	8	6	6	6	7.5	46.0	41.0	41.0	41.0	7	12	74.0	7	12	48.0	7	7.5	5	6	37.8	114	126	138	7	6	66.0	5	12	5	8.5	0
20 FT	22	24	9	8	6	6	6	6.5	45.5	42.0	42.0	46.0	7	12	73.5	7	12	47.5	7	7.5	6	7	40.3	116	128	140	7	6	66.0	5	12	5	8.5	0
22 FT	24	26	10	8	7	7.5	6	7.5	46.0	44.0	44.0	44.0	7	12	72.5	7	12	47.5	7	7.5	5	6	37.5	118	130	142	7	6	66.0	5	12	5	8	0
24 FT	25	27	11	8	7	7	6	8	46.5	45.0	45.0	45.0	7	12	71.5	7	12	47.0	7	6.5	5	6	37.5	119	131	143	8	7	72.0	5	12	5	7.5	0
26 FT	27	29	11	8	7	6.5	6	8	46.1	47.0	47.0	51.0	7	12	70.5	7	12	47.0	7	7	6	7.5	40.6	121	133	145	8	7	72.0	5	12	5	7.5	0
28 FT	28	30	11	8	7	6.5	6	7	45.9	52.0	52.0	52.0	7	12	69.5	7	12	46.5	7	6.5	6	7	40.5	122	134	146	8	7	72.0	5	12	5	7.5	0
30 FT	29	32	12	8	7	6	6	7.5	46.9	53.0	53.0	53.0	7	12	69.0	7	12	46.5	7	7	6	7.5	41.0	124	136	148	8	7	72.0	5	12	5	7	0
32 FT	30	33	12	8	7	6	6	7.5	45.4	54.0	54.0	54.0	7	12	67.5	7	12	46.0	7	6.5	6	7	39.5	125	137	149	8	6.5	72.0	5	12	5	7	0
34 FT	31	34	12	8	8	7.5	6	7.5	45.3	55.0	55.0	55.0	8	15	75.0	8	15	53.0	7	6.5	6	7	39.6	126	138	150	8	6.5	72.0	5	12	5	7	0
36 FT	32	36	12	8	8	7	6	7	45.4	56.0	56.0	56.0	8	14	73.5	8	14	52.5	7	6.5	6	6.5	39.9	128	140	152	8	6	72.0	5	12	5	7	0
38 FT	33	37	12	8	8	6.5	6	6.5	45.4	57.0	57.0	57.0	8	13	72.5	8	13	51.5	7	6.5	6	6.5	40.0	129	141	153	8	6	72.0	5	12	5	6.5	0
40 FT	35	38	12	8	8	6.5	6	6.5	45.1	59.0	59.0	59.0	8	13	71.0	8	13	49.5	7	6	6	6	40.3	130	142	154	8	6	71.5	5	12	5	6	0
42 FT	35	39	13	8	8	6	6	6.5	46.1	59.0	59.0	59.0	8	12	71.0	8	12	50.0	7	6	6	6	40.6	131	143	155	8	6	72.0	5	12	5	6.5	0
44 FT	36	41	13	8	8	6	6	6.5	46.3	60.0	60.0	60.0	8	12	70.5	8	12	49.0	7	6	7	7	43.9	133	145	157	9	7	77.5	5	9	5	6	0
46 FT	37	42	13	8	8	6	6	6	46.3	61.0	61.0	61.0	8	12	70.0	8	12	48.0	7	6	7	7	44.1	134	146	158	9	7	77.5	5	6.5	6	8.5	0
48 FT	38	43	13	9	8	6	6	6	46.3	62.0	62.0	62.0	8	12	70.5	8	12	48.5	7	6	7	6.5	44.3	135	147	159	9	7	77.5	5	12	6	8	0
50 FT	39	44	14	9	8	6	6	6	47.1	63.0	63.0	63.0	8	12	70.0	8	12	47.5	8	7.5	7	7	44.8	136	148	160	9	6.5	77.5	5	12	6	8	0

SPAN (S) = 15 FT HEIGHT (HT) = 11 FT OR 12 FT OR 13 FT

DESIGN FILL	MEMBER THICKNESS				TOP SLAB BARS												BOTTOM SLAB BARS												WALL BARS				
					A1 BARS		J3 BARS			K2			H1 BARS			H2 BARS			A2 BARS		J4 BARS			K3			H3 BARS			B1 BARS		B2 BARS		
	TS	BS	TX	TI	SIZE	SPA.	SIZE	SPA.	C1	HT=11′	HT=12′	HT=13′	SIZE	SPA.	C5	SIZE	SPA.	C6	SIZE	SPA.	SIZE	SPA.	C4	HT=11′	HT=12′	HT=13′	SIZE	SPA.	C7	SIZE	SPA.	SIZE	SPA.	G1
1 FT	15	12	9	10	6	8	5	6.5	73.9	35.0	35.0	35.0	6	16	147.0	6	16	51.0	5	6	6	6	88.3	140	152	164	6	6	67.0	5	12	5	8.5	12
2 FT	17	13	9	10	6	7.5	5	6.5	73.9	37.0	37.0	37.0	6	14	147.0	6	14	46.0	5	6	6	6	80.4	141	153	165	6	6	66.0	5	12	5	8.5	12
4 FT	13	12	9	10	6	7	6	6	85.5	33.0	37.0	37.0	6	12	96.0	6	12	42.0	5	6	6	6	70.6	140	152	164	7	6	68.5	5	12	5	8.5	12
6 FT	13	14	10	10	6	8	6	7	67.4	33.0	33.0	37.0	7	15	76.5	7	15	43.0	6	8	6	6.5	66.0	142	154	166	7	6.5	68.0	5	12	5	8	12
8 FT	14	15	10	10	6	8	6	6.5	62.0	34.0	34.0	38.0	7	14	72.0	7	14	42.0	6	7.5	6	6.5	62.1	143	155	167	7	6	67.0	5	12	5	8	0
10 FT	15	17	10	10	6	8	6	6.5	64.6	35.0	35.0	39.0	7	14	78.0	7	14	49.5	6	7	6	6.5	59.6	145	157	169	7	6.5	67.0	5	12	5	8	0
12 FT	16	18	11	10	6	7.5	6	6.5	62.6	36.0	36.0	40.0	7	13	76.5	7	13	49.0	6	6.5	6	7.5	57.4	146	158	170	7	6	67.0	5	12	5	7.5	0
14 FT	18	20	12	10	6	7	6	7	62.0	38.0	38.0	42.0	7	13	75.5	7	13	49.0	6	6	6	8	56.4	148	160	172	7	6.5	67.0	5	12	5	7	0
16 FT	19	21	12	10	6	6.5	6	6.5	60.9	39.0	39.0	43.0	7	13	74.5	7	13	48.5	7	8	6	7.5	55.4	149	161	173	7	6	66.5	5	12	5	7	0
18 FT	21	22	12	10	6	6	6	6.5	59.8	41.0	45.0	45.0	7	13	74.0	7	13	48.5	7	7	6	6	54.6	150	162	174	7	6	66.5	5	12	5	7	0
20 FT	22	24	13	10	6	6	6	6.5	59.9	42.0	42.0	46.0	7	12	73.5	7	12	48.5	7	7	6	7.5	54.4	152	164	176	7	6	66.5	5	12	5	6.5	0
22 FT	23	26	13	10	7	7	6	6	59.3	43.0	43.0	47.0	7	12	72.5	7	12	48.0	7	7	6	7	53.9	154	166	178	7	6	66.5	5	12	5	6.5	0
24 FT	25	28	14	10	7	7	6	6	59.5	45.0	45.0	49.0	7	12	71.5	7	12	48.0	7	7	6	7.5	54.0	156	168	180	7	6	66.5	5	12	5	6	0
26 FT	26	29	14	10	7	6.5	6	6	59.0	50.0	50.0	50.0	7	12	71.0	7	12	47.5	7	7	6	7.5	53.6	157	169	181	8	7	72.5	5	12	5	6	0
28 FT	27	31	15	10	7	6	6	6	59.6	51.0	51.0	51.0	7	12	70.5	7	12	47.5	7	7	6	7.5	53.9	159	171	183	8	7	72.5	5	12	6	8	0
30 FT	29	32	15	10	7	6	7	8	64.3	53.0	53.0	53.0	7	12	69.0	7	12	47.0	7	6.5	6	7.5	54.0	160	172	184	8	7	72.5	5	12	6	8	0
32 FT	30	33	16	10	7	6	6	6	59.9	54.0	54.0	54.0	7	12	68.0	7	12	46.5	7	6	6	7	54.3	161	173	185	8	6.5	72.5	5	12	6	8	0
34 FT	31	35	16	10	8	7.5	6	6	58.3	55.0	55.0	55.0	8	15	75.0	8	15	53.0	7	6.5	6	6.5	52.6	163	175	187	8	6.5	72.5	5	12	6	8	0
36 FT	32	36	16	10	8	7.5	7	7.5	63.1	56.0	56.0	56.0	8	14	74.0	8	14	52.5	7	6.5	6	6.5	52.8	164	176	188	8	6	72.5	5	12	6	8	0
38 FT	33	37	16	10	8	7	7	7	63.1	57.0	57.0	57.0	8	14	72.5	8	14	52.0	7	6	6	6.5	52.9	165	177	189	8	6	72.5	5	12	6	8	0
40 FT	34	38	17	10	8	7	7	7.5	63.9	58.0	58.0	58.0	8	14	72.0	8	14	51.0	7	6	6	6	53.3	166	178	190	8	6	72.5	5	12	6	7.5	0
42 FT	35	40	18	10	8	6.5	7	7.5	64.8	59.0	59.0	59.0	8	13	71.5	8	13	50.0	7	6	6	6	53.8	168	180	192	9	7	78.5	5	12	6	7	0
44 FT	36	41	18	10	8	6.5	7	7.5	64.6	60.0	60.0	66.0	8	13	71.0	8	13	49.5	7	6	7	8	56.9	169	181	193	9	7	78.5	5	12	6	7	0
46 FT	37	42	18	10	8	6.5	7	6.5	64.6	61.0	61.0	67.0	8	12	70.5	8	12	48.5	7	6	7	7.5	57.0	170	182	194	9	7	78.5	5	12	6	7	0
48 FT	38	43	19	10	8	6	7	7	65.4	62.0	62.0	68.0	8	13	69.5	8	13	48.0	8	7.5	7	7.5	57.5	171	183	195	9	7	78.5	5	12	6	6.5	0
50 FT	39	44	19	10	8	6	7	6.5	65.3	63.0	63.0	69.0	8	13	69.0	8	13	47.5	8	7.5	7	7	57.6	172	184	196	9	6.5	78.5	5	12	6	6.5	0

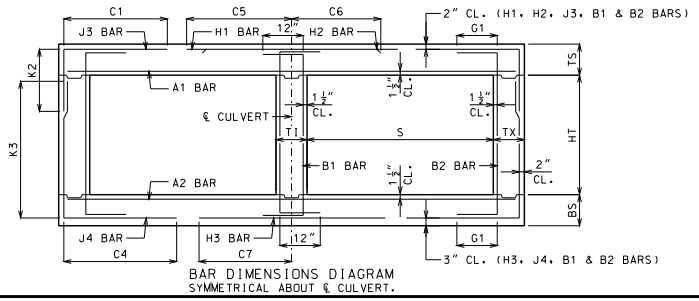

BAR DIMENSIONS DIAGRAM
SYMMETRICAL ABOUT ℄ CULVERT.

GENERAL NOTES:

IF DESIGN FILL IS BETWEEN TABULATED DESIGN FILLS, USE THE NEXT GREATER TABULATED DESIGN FILL, EXCEPT FOR DESIGN FILLS BETWEEN 2 FEET AND 4 FEET. FOR DESIGN FILLS BETWEEN 2 FEET AND 4 FEET USE THE GREATER MEMBER THICKNESS, AREA OF REINFORCEMENT AND BAR DIMENSIONS FROM THE 2 FEET AND 4 FEET TABULATED DESIGN FILLS. AREA OF REINFORCEMENT EQUALS BAR AREA PER FOOT SPACING.

SPECIAL DESIGNS ARE REQUIRED WHEN THE DESIGN FILL IS LESS THAN 1 FOOT OR GREATER THAN 50 FEET.

DIMENSIONS ARE IN INCHES UNLESS OTHERWISE SPECIFIED.

DESIGN FILLS ARE MEASURED FROM THE TOP OF TOP SLAB TO THE TOP OF EARTH FILL OR ROADWAY.

CULVERTS MEET STRENGTH AND SERVICEABILITY REQUIREMENTS FOR THE DESIGN VEHICULAR LIVE LOAD HL-93 MINUS THE LANE LOAD.

MISSOURI HIGHWAYS AND TRANSPORTATION COMMISSION
105 WEST CAPITOL
JEFFERSON CITY, MO 65102
1-888-ASK-MODOT (1-888-275-6636)

STATE OF MISSOURI
DENNIS W. HECKMANN
NUMBER PE-27141
PROFESSIONAL ENGINEER
THIS SHEET HAS BEEN SIGNED, SEALED AND DATED ELECTRONICALLY.

CONCRETE DOUBLE BOX CULVERT

MEMBER THICKNESS
BAR SIZE, SPACING & DIMENSIONS

SPAN (S): 15 FEET
HEIGHT (HT): 8 THRU 13 FEET

DATE EFFECTIVE: 10/01/2011
DATE PREPARED: 9/8/2011

703.47

SHEET NO.
24 OF 27

IF A SEAL IS PRESENT ON THIS SHEET IT HAS BEEN ELECTRONICALLY SEALED AND DATED.

SPAN (S) = 15 FT HEIGHT (HT) = 14 FT OR 15 FT OR 16 FT

DESIGN FILL	MEMBER THICKNESS				TOP SLAB BARS													BOTTOM SLAB BARS												WALL BARS				
					A1 BARS		J3 BARS						H1 BARS			H2 BARS			A2 BARS		J4 BARS					H3 BARS			B1 BARS		B2 BARS		
										K2													K3									
	TS	BS	TX	TI	SIZE	SPA.	SIZE	SPA.	C1	HT=14'	HT=15'	HT=16'	SIZE	SPA.	C5	SIZE	SPA.	C6	SIZE	SPA.	SIZE	SPA.	C4	HT=14'	HT=15'	HT=16'	SIZE	SPA.	C7	SIZE	SPA.	SIZE	SPA.	G1
1 FT	15	13	12	13	6	8	6	8.5	79.3	35.0	35.0	39.0	6	16	152.5	6	16	50.0	5	6	6	7	102.4	177	189	201	6	6	67.5	5	11	5	7	12
2 FT	16	14	12	13	6	7.5	5	6	76.3	36.0	36.0	36.0	6	15	149.5	6	15	48.5	6	8	6	7.5	96.3	178	190	202	6	6	67.0	5	12	5	7	12
4 FT	12	13	12	13	6	7	6	7	101.4	36.0	36.0	36.0	6	12	86.5	6	12	41.5	5	6	6	6.5	88.5	177	189	201	7	6.5	69.0	5	10.5	5	7	12
6 FT	13	14	12	13	6	8	6	6.5	86.3	37.0	37.0	37.0	7	16	74.5	7	16	43.5	6	8	6	6.5	82.9	178	190	202	7	6	68.0	5	12	5	7	12
8 FT	13	15	13	13	6	8	6	6.5	76.4	37.0	37.0	37.0	7	14	70.5	7	14	42.5	6	7.5	6	6.5	77.9	179	191	203	7	6	68.0	5	12	5	6.5	0
10 FT	15	17	13	13	6	8	6	6	80.6	39.0	39.0	39.0	7	14	77.5	7	14	50.5	6	7	6	6.5	76.0	181	193	205	7	6.5	67.5	5	12	5	6.5	0
12 FT	16	18	14	13	6	8	6	6	78.4	40.0	40.0	40.0	7	14	76.5	7	14	50.0	6	6.5	6	6.5	73.8	182	194	206	7	6	67.5	5	12	5	6	0
14 FT	17	20	14	13	6	7.5	7	7.5	81.6	41.0	41.0	41.0	7	13	75.5	7	13	50.0	6	6	6	6	72.9	184	196	208	7	6	67.5	5	12	5	6	0
16 FT	19	21	15	13	6	6.5	7	8	80.9	43.0	43.0	49.0	7	13	75.0	7	13	49.5	7	8	7	8	74.4	185	197	209	7	6	67.0	5	12	6	8	0
18 FT	20	23	16	13	6	6.5	7	8	80.1	44.0	44.0	44.0	7	13	74.0	7	13	49.5	7	7.5	6	6	70.8	187	199	211	7	6	67.0	5	12	6	8	0
20 FT	21	24	17	13	6	6	7	7.5	79.5	45.0	45.0	45.0	7	12	73.5	7	12	49.5	7	7	6	6	69.8	188	200	212	7	6	67.0	5	12	6	7.5	0
22 FT	23	26	17	13	7	7.5	7	7.5	78.9	47.0	47.0	47.0	7	12	73.0	7	12	49.0	7	7	6	6	69.4	190	202	214	7	6	67.0	5	12	6	7.5	0
24 FT	24	28	18	13	7	7	7	7.5	78.6	48.0	48.0	48.0	7	12	72.5	7	12	49.0	7	7	6	6.5	69.0	192	204	216	7	6	67.0	5	12	6	7	0
26 FT	26	29	18	13	7	7	7	7	78.1	50.0	50.0	50.0	7	12	71.5	7	12	49.0	7	6	6	6	68.5	193	205	217	8	7	73.0	5	12	6	7	0
28 FT	27	31	19	13	7	6.5	7	7	78.5	51.0	51.0	51.0	7	12	71.0	7	12	48.5	7	6.5	6	6	68.6	195	207	219	8	7	73.0	5	12	6	6.5	0
30 FT	28	32	19	13	7	6	7	6	78.1	52.0	52.0	52.0	7	12	70.5	7	12	48.5	7	6.5	6	6	68.5	196	208	220	8	7	73.0	5	12	6	6.5	0
32 FT	30	34	20	13	7	6.5	7	6.5	78.8	54.0	54.0	54.0	7	12	69.0	7	12	47.0	7	6.5	6	6	68.9	198	210	222	8	6.5	73.0	5	12	6	6.5	0
34 FT	31	35	20	13	7	6	7	6.5	76.3	55.0	55.0	55.0	8	15	76.0	8	15	54.0	7	6.5	6	6	66.4	199	211	223	8	6.5	73.0	5	12	6	6.5	0
36 FT	32	36	21	13	8	7.5	7	6.5	76.8	56.0	56.0	56.0	8	14	75.0	8	14	53.5	7	6	6	6	66.6	200	212	224	8	6	73.0	5	12	6	6	0
38 FT	33	37	21	13	8	7	7	6	76.8	57.0	57.0	57.0	8	14	74.0	8	14	53.0	7	6	6	6	66.6	201	213	225	8	6	73.0	5	12	6	6	0
40 FT	34	39	22	13	8	7	7	6	77.5	58.0	58.0	64.0	8	14	73.0	8	14	52.0	7	6	7	7.5	70.1	203	215	227	8	6	73.0	5	12	6	6	0
42 FT	35	40	23	13	8	7	7	6.5	78.1	59.0	59.0	65.0	8	13	72.5	8	13	51.0	7	6	7	7.5	70.4	204	216	228	9	7	79.0	5	12	7	7.5	0
44 FT	35	41	24	13	8	6	7	6	78.9	65.0	65.0	65.0	8	12	72.5	8	12	52.0	8	7.5	7	7	70.6	205	217	229	9	7	79.5	5	12	7	8	0
46 FT	36	42	25	13	8	6	7	6	79.5	66.0	66.0	66.0	8	12	72.0	8	12	51.0	8	7	7	7.5	70.9	206	218	230	9	7	79.5	5	12	7	8	0
48 FT	37	43	26	13	8	6.5	7	6	80.3	67.0	67.0	67.0	8	12	71.5	8	12	50.0	8	6.5	7	7.5	71.3	207	219	231	9	7	79.5	5	12	7	8	0
50 FT	38	45	27	13	8	6	7	6	81.1	68.0	68.0	68.0	8	12	71.0	8	12	49.0	8	7	7	7	71.8	209	221	233	9	6.5	79.5	5	12	7	8	0

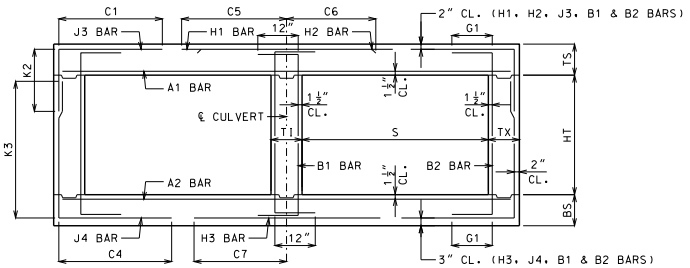

BAR DIMENSIONS DIAGRAM
SYMMETRICAL ABOUT ℄ CULVERT.

GENERAL NOTES:

IF DESIGN FILL IS BETWEEN TABULATED DESIGN FILLS, USE THE NEXT GREATER TABULATED DESIGN FILL, EXCEPT FOR DESIGN FILLS BETWEEN 2 FEET AND 4 FEET. FOR DESIGN FILLS BETWEEN 2 FEET AND 4 FEET USE THE GREATER MEMBER THICKNESS, AREA OF REINFORCEMENT AND BAR DIMENSIONS FROM THE 2 FEET AND 4 FEET TABULATED DESIGN FILLS. AREA OF REINFORCEMENT EQUALS BAR AREA PER FOOT SPACING.

SPECIAL DESIGNS ARE REQUIRED WHEN THE DESIGN FILL IS LESS THAN 1 FOOT OR GREATER THAN 50 FEET.

DIMENSIONS ARE IN INCHES UNLESS OTHERWISE SPECIFIED.

DESIGN FILLS ARE MEASURED FROM THE TOP OF TOP SLAB TO THE TOP OF EARTH FILL OR ROADWAY.

CULVERTS MEET STRENGTH AND SERVICEABILITY REQUIREMENTS FOR THE DESIGN VEHICULAR LIVE LOAD HL-93 MINUS THE LANE LOAD.

MISSOURI HIGHWAYS AND TRANSPORTATION COMMISSION
105 WEST CAPITOL
JEFFERSON CITY, MO 65102
1-888-ASK-MODOT (1-888-275-6636)

STATE OF MISSOURI
DENNIS W. HECKMANN
NUMBER PE-27141
PROFESSIONAL ENGINEER
THIS SHEET HAS BEEN SIGNED, SEALED AND DATED ELECTRONICALLY.

CONCRETE DOUBLE BOX CULVERT

MEMBER THICKNESS
BAR SIZE, SPACING & DIMENSIONS

SPAN (S): 15 FEET
HEIGHT (HT): 14 THRU 16 FEET

DATE EFFECTIVE: 10/01/2011
DATE PREPARED: 9/8/2011

703.47

SHEET NO.
25 OF 27

IF A SEAL IS PRESENT ON THIS SHEET IT HAS BEEN ELECTRONICALLY SEALED AND DATED.

SPAN (S) = 16 FT HEIGHT (HT) = 8 FT OR 9 FT OR 10 FT

DESIGN FILL	MEMBER THICKNESS				TOP SLAB BARS												BOTTOM SLAB BARS											WALL BARS				
					A1 BARS		J3 BARS						H1 BARS			H2 BARS			A2 BARS		J4 BARS					H3 BARS			B1 BARS		B2 BARS		
										K2													K3									
	TS	BS	TX	TI	SIZE	SPA.	SIZE	SPA.	C1	HT=8′	HT=9′	HT=10′	SIZE	SPA.	C5	SIZE	SPA.	C6	SIZE	SPA.	SIZE	SPA.	C4	HT=8′	HT=9′	HT=10′	SIZE	SPA.	C7	SIZE	SPA.	SIZE	SPA.	G1
1 FT	15	12	8	8	6	7.5	5	8	76.5	35.0	35.0	35.0	6	15	154.5	6	15	54.0	5	6	6	7	66.9	104	116	128	7	7	72.5	5	12	5	12	12
2 FT	17	13	8	8	6	7	5	6.5	76.5	37.0	37.0	37.0	6	14	154.5	6	14	50.0	5	6	5	6	56.4	105	117	129	7	7	71.5	5	12	5	12	12
4 FT	13	13	8	8	6	6.5	6	7	55.6	33.0	33.0	33.0	7	14	97.0	7	14	45.5	5	6	5	6	49.6	105	117	129	7	6	71.0	5	12	5	12	12
6 FT	14	14	8	8	6	7	5	6	47.1	34.0	34.0	34.0	7	14	82.0	7	14	44.0	6	8	5	6	45.1	106	118	130	7	6	70.5	5	12	5	12	12
8 FT	15	16	8	8	6	7.5	5	6	48.4	35.0	35.0	35.0	7	13	84.0	7	13	51.0	6	7	5	7	41.9	108	120	132	7	6	70.0	5	12	5	11	0
10 FT	16	17	8	8	6	7	6	8	49.6	36.0	36.0	36.0	7	12	81.5	7	12	50.5	6	7	5	6.5	39.9	109	121	133	7	6	69.5	5	12	5	10	0
12 FT	18	19	8	8	6	7	6	7.5	47.5	38.0	38.0	38.0	7	12	80.0	7	12	50.0	6	6	5	6	38.6	111	123	135	7	6	69.5	5	12	5	9.5	0
14 FT	19	20	8	8	6	6.5	6	7	46.0	39.0	39.0	43.0	7	12	79.0	7	12	49.5	6	6	6	7.5	40.5	112	124	136	7	6	69.5	5	12	5	9.5	0
16 FT	21	22	8	8	6	6	6	7	44.9	45.0	45.0	45.0	7	12	78.0	7	12	49.5	7	7.5	6	7	39.9	114	126	138	7	6	69.5	5	12	5	8.5	0
18 FT	22	23	9	8	6	6	6	7.5	45.1	42.0	42.0	42.0	8	15	85.0	8	15	57.0	7	6.5	5	6	36.8	115	127	139	8	6.5	75.5	5	12	5	8.5	0
20 FT	24	25	9	8	7	7.5	6	7	44.4	48.0	48.0	48.0	8	15	84.0	8	15	57.0	7	7	6	7	39.4	117	129	141	8	7	75.5	5	12	5	8.5	0
22 FT	25	27	10	8	7	7	6	7.5	45.0	45.0	45.0	49.0	8	14	83.5	8	14	56.5	7	6.5	6	7	39.5	119	131	143	8	7	75.5	5	12	5	8	0
24 FT	27	29	10	8	7	6.5	6	6.5	44.5	51.0	51.0	51.0	8	14	82.5	8	14	56.5	7	6.5	6	6.5	39.3	121	133	145	8	7	75.0	5	12	5	8	0
26 FT	28	31	11	8	7	6	6	7.5	45.3	52.0	52.0	52.0	8	14	81.5	8	14	56.0	7	6.5	6	7	39.5	123	135	147	8	7	75.0	5	12	5	7.5	0
28 FT	30	32	11	8	7	6	6	7	44.9	54.0	54.0	54.0	8	14	80.5	8	14	56.0	7	6.5	6	6.5	39.6	124	136	148	8	7	75.0	5	12	5	7.5	0
30 FT	31	34	11	8	8	7.5	6	6	44.9	55.0	55.0	55.0	8	14	79.5	8	14	55.5	7	6.5	6	6	39.6	126	138	150	8	6.5	75.0	5	12	5	7	0
32 FT	32	35	12	8	8	7	6	7	45.8	56.0	56.0	56.0	8	14	78.5	8	14	55.0	7	6	6	6.5	40.0	127	139	151	8	6.5	75.0	5	12	5	7	0
34 FT	33	36	12	8	8	7	6	7	45.3	57.0	57.0	57.0	8	14	77.5	8	14	54.5	7	6	6	6.5	39.3	128	140	152	8	6	75.0	5	12	5	7	0
36 FT	35	38	12	8	8	6.5	6	6.5	45.3	59.0	59.0	59.0	8	13	75.0	8	13	52.0	7	6	6	6	39.3	130	142	154	8	6	75.0	5	12	5	7	0
38 FT	36	39	12	8	8	6.5	6	6.5	45.3	60.0	60.0	60.0	8	13	74.0	8	13	51.5	7	6	6	6	39.3	131	143	155	8	6	75.0	5	12	5	6.5	0
40 FT	37	41	12	8	8	6.5	6	6	45.3	61.0	61.0	61.0	8	12	73.5	8	12	50.5	7	6	7	6.5	42.5	133	145	157	9	7	80.5	5	11	5	6	0
42 FT	38	42	12	8	8	6	6	6	45.3	62.0	62.0	62.0	8	12	73.0	8	12	50.0	7	6	7	6	42.6	134	146	158	9	7	80.5	5	7	6	8	0
44 FT	39	43	13	9	8	6	6	6	45.8	63.0	63.0	63.0	8	12	73.5	8	12	50.5	8	7.5	7	6.5	43.1	135	147	159	9	7	81.0	5	12	5	6	0
46 FT	40	44	13	9	8	6	7	7	50.8	70.0	70.0	70.0	8	12	73.0	8	12	49.5	8	7.5	7	6.5	43.4	136	148	160	9	6.5	80.5	5	12	6	8	0
48 FT	41	45	13	9	9	7.5	7	7	50.8	71.0	71.0	71.0	9	15	80.5	9	15	56.5	8	7	7	6.5	43.5	137	149	161	9	6.5	80.5	5	12	6	7.5	0
50 FT	42	46	13	9	9	7	7	6.5	50.8	72.0	72.0	72.0	9	14	80.0	9	14	56.0	8	7	7	6	43.8	138	150	162	9	6.5	80.5	5	9.5	6	7	0

SPAN (S) = 16 FT HEIGHT (HT) = 11 FT OR 12 FT OR 13 FT

DESIGN FILL	MEMBER THICKNESS				TOP SLAB BARS												BOTTOM SLAB BARS											WALL BARS				
					A1 BARS		J3 BARS						H1 BARS			H2 BARS			A2 BARS		J4 BARS					H3 BARS			B1 BARS		B2 BARS		
										K2													K3									
	TS	BS	TX	TI	SIZE	SPA.	SIZE	SPA.	C1	HT=11′	HT=12′	HT=13′	SIZE	SPA.	C5	SIZE	SPA.	C6	SIZE	SPA.	SIZE	SPA.	C4	HT=11′	HT=12′	HT=13′	SIZE	SPA.	C7	SIZE	SPA.	SIZE	SPA.	G1
1 FT	15	13	9	10	6	7.5	5	6	77.5	35.0	35.0	35.0	6	15	155.5	6	15	53.5	5	6	6	6	89.5	141	153	165	6	6	70.0	5	11.5	5	8.5	12
2 FT	17	14	9	10	6	7.5	5	6.5	77.5	37.0	37.0	37.0	6	14	155.5	6	14	50.0	6	8	6	6.5	79.8	142	154	166	6	6	69.5	5	12	5	8.5	12
4 FT	13	13	10	10	6	6.5	6	7	76.9	33.0	37.0	37.0	7	15	96.5	7	15	46.0	5	6	6	6.5	70.0	141	153	165	7	6	71.5	5	11	5	8.5	12
6 FT	13	14	10	10	6	7	6	7	65.3	33.0	37.0	37.0	7	13	79.5	7	13	44.0	6	8	6	6.5	64.5	142	154	166	7	6	71.0	5	12	5	8	12
8 FT	14	16	10	10	6	7	6	6.5	60.3	34.0	34.0	38.0	7	13	75.0	7	13	43.0	6	7	6	7	60.6	144	156	168	7	6	70.5	5	12	5	8	0
10 FT	16	17	10	10	6	7	6	6.5	63.1	36.0	40.0	40.0	7	13	81.5	7	13	51.0	6	7	6	6.5	57.8	145	157	169	7	6	70.0	5	12	5	8	0
12 FT	17	19	11	10	6	7	6	6.5	62.3	37.0	37.0	41.0	7	12	80.0	7	12	50.5	6	6	6	7.5	56.5	147	159	171	7	6	70.0	5	12	5	7.5	0
14 FT	19	21	12	10	6	6.5	6	7	61.5	39.0	39.0	43.0	7	12	78.5	7	12	50.5	7	8	6	8	55.8	149	161	173	7	6	70.0	5	12	5	7	0
16 FT	20	22	12	10	6	6.5	6	6.5	60.3	40.0	40.0	44.0	7	12	78.0	7	12	50.0	7	7.5	6	7	54.6	150	162	174	7	6	70.0	5	12	5	7	0
18 FT	22	24	12	10	6	6	6	6	59.3	42.0	46.0	46.0	7	12	77.0	7	12	50.0	7	7	6	6.5	54.0	152	164	176	7	6	69.5	5	12	5	7	0
20 FT	23	25	13	10	7	7.5	6	6	59.1	43.0	43.0	47.0	8	15	84.5	8	15	57.5	7	6.5	6	7	53.6	153	165	177	8	7	75.5	5	12	5	6.5	0
22 FT	25	27	13	10	7	7	6	6	58.4	45.0	45.0	49.0	8	15	83.5	8	15	57.5	7	6.5	6	7	53.1	155	167	179	8	7	75.5	5	12	5	6.5	0
24 FT	27	29	14	10	7	6.5	6	6	58.6	51.0	51.0	51.0	8	15	82.5	8	15	57.0	7	6.5	6	7.5	53.3	157	169	181	8	7	75.5	5	12	5	6	0
26 FT	28	31	14	10	7	6.5	6	6	58.3	52.0	52.0	52.0	8	14	82.0	8	14	57.0	7	6.5	6	7.5	52.9	159	171	183	8	7	75.5	5	12	5	6	0
28 FT	30	33	15	10	7	6	6	6	58.8	54.0	54.0	54.0	8	15	80.5	8	15	56.5	7	6.5	6	7	53.3	161	173	185	8	6.5	75.5	5	12	6	8	0
30 FT	31	34	15	10	8	7.5	7	8	63.5	55.0	55.0	55.0	8	15	79.5	8	15	56.0	7	6	6	7	53.1	162	174	186	8	6.5	75.5	5	12	6	8	0
32 FT	32	35	15	10	8	7.5	7	7	63.3	56.0	56.0	56.0	8	14	79.0	8	14	55.5	7	6	6	6.5	53.0	163	175	187	8	6.5	75.5	5	12	6	8	0
34 FT	33	37	16	10	8	7	7	7.5	64.0	57.0	57.0	57.0	8	14	77.5	8	14	55.0	7	6	6	6.5	53.5	165	177	189	8	6	75.5	5	12	6	8	0
36 FT	34	38	16	10	8	7	7	7.5	62.4	58.0	58.0	58.0	8	14	76.5	8	14	54.0	7	6	6	6	51.9	166	178	190	8	6	75.5	5	12	6	8	0
38 FT	35	40	16	10	8	6.5	7	7	62.4	59.0	59.0	59.0	8	13	75.0	8	13	53.5	7	6	6	6	52.0	168	180	192	9	7	81.5	5	12	6	8	0
40 FT	36	41	17	10	8	6	7	7.5	63.1	60.0	60.0	66.0	8	12	74.5	8	12	52.5	8	7.5	7	8	55.5	169	181	193	9	7	81.5	5	12	6	7.5	0
42 FT	38	42	17	10	8	6	7	7.5	62.9	62.0	62.0	68.0	8	12	73.5	8	12	50.0	8	7.5	7	7.5	55.8	170	182	194	9	7	81.5	5	12	6	7.5	0
44 FT	39	43	18	10	8	6	7	7.5	63.8	63.0	63.0	69.0	8	12	73.0	8	12	49.0	8	7	7	7.5	56.1	171	183	195	9	7	81.5	5	12	6	7	0
46 FT	40	44	18	10	8	6	7	7.5	63.6	70.0	70.0	70.0	8	12	72.0	8	12	48.5	8	6.5	7	7	56.3	172	184	196	9	6.5	81.5	5	12	6	7	0
48 FT	40	46	19	10	8	6	7	7	64.8	70.0	70.0	70.0	8	12	72.0	8	12	49.0	8	7	7	7	56.6	174	186	198	9	6.5	81.5	5	12	6	6.5	0
50 FT	41	47	19	10	9	7.5	7	6.5	64.6	71.0	71.0	71.0	8	12	71.5	8	12	48.5	8	7	7	6.5	56.9	175	187	199	9	6	81.5	5	12	6	6.5	0

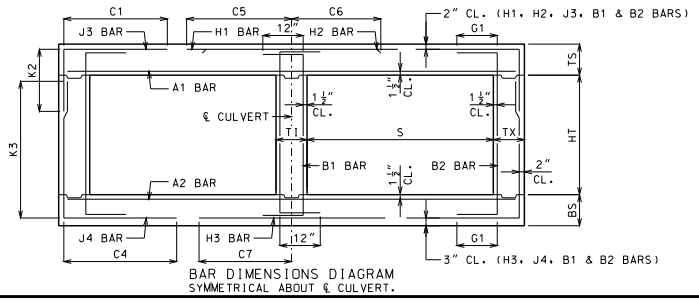

BAR DIMENSIONS DIAGRAM
SYMMETRICAL ABOUT ℄ CULVERT.

GENERAL NOTES:

IF DESIGN FILL IS BETWEEN TABULATED DESIGN FILLS, USE THE NEXT GREATER TABULATED DESIGN FILL, EXCEPT FOR DESIGN FILLS BETWEEN 2 FEET AND 4 FEET. FOR DESIGN FILLS BETWEEN 2 FEET AND 4 FEET USE THE GREATER MEMBER THICKNESS, AREA OF REINFORCEMENT AND BAR DIMENSIONS FROM THE 2 FEET AND 4 FEET TABULATED DESIGN FILLS. AREA OF REINFORCEMENT EQUALS BAR AREA PER FOOT SPACING.

SPECIAL DESIGNS ARE REQUIRED WHEN THE DESIGN FILL IS LESS THAN 1 FOOT OR GREATER THAN 50 FEET.

DIMENSIONS ARE IN INCHES UNLESS OTHERWISE SPECIFIED.

DESIGN FILLS ARE MEASURED FROM THE TOP OF TOP SLAB TO THE TOP OF EARTH FILL OR ROADWAY.

CULVERTS MEET STRENGTH AND SERVICEABILITY REQUIREMENTS FOR THE DESIGN VEHICULAR LIVE LOAD HL-93 MINUS THE LANE LOAD.

MISSOURI HIGHWAYS AND TRANSPORTATION COMMISSION
105 WEST CAPITOL
JEFFERSON CITY, MO 65102
1-888-ASK-MODOT (1-888-275-6636)

STATE OF MISSOURI
DENNIS W. HECKMAN
NUMBER PE-27141
PROFESSIONAL ENGINEER
THIS SHEET HAS BEEN SIGNED, SEALED AND DATED ELECTRONICALLY.

CONCRETE DOUBLE BOX CULVERT

MEMBER THICKNESS
BAR SIZE, SPACING & DIMENSIONS

SPAN (S): 16 FEET
HEIGHT (HT): 8 THRU 13 FEET

DATE EFFECTIVE: 10/01/2011
DATE PREPARED: 9/8/2011

703.47

SHEET NO. 26 OF 27

IF A SEAL IS PRESENT ON THIS SHEET IT HAS BEEN ELECTRONICALLY SEALED AND DATED.

SPAN (S) = 16 FT HEIGHT (HT) = 14 FT OR 15 FT OR 16 FT

DESIGN FILL	MEMBER THICKNESS				TOP SLAB BARS													BOTTOM SLAB BARS												WALL BARS				
					A1 BARS		J3 BARS			K2			H1 BARS			H2 BARS		A2 BARS		J4 BARS			K3			H3 BARS			B1 BARS		B2 BARS		
	TS	BS	TX	TI	SIZE	SPA.	SIZE	SPA.	C1	HT=14'	HT=15'	HT=16'	SIZE	SPA.	C5	SIZE	SPA.	C6	SIZE	SPA.	SIZE	SPA.	C4	HT=14'	HT=15'	HT=16'	SIZE	SPA.	C7	SIZE	SPA.	SIZE	SPA.	G1
1 FT	15	13	12	13	6	7.5	6	8	82.9	35.0	35.0	39.0	6	15	160.5	6	15	53.0	5	6	6	7	101.1	177	189	201	6	6	70.5	5	10	5	7	12
2 FT	17	14	12	13	6	7.5	6	8.5	82.9	37.0	37.0	41.0	6	14	160.5	6	14	50.0	6	8	6	7	95.1	178	190	202	7	7	73.0	5	12	5	7	12
4 FT	13	13	12	13	6	7	6	7	99.8	37.0	37.0	37.0	7	15	94.0	7	15	46.0	6	8.5	6	6	86.1	177	189	201	7	6	72.0	5	11	5	7	12
6 FT	13	15	12	13	6	7	6	6.5	82.6	37.0	37.0	37.0	7	14	77.5	7	14	44.5	6	7.5	6	6.5	82.5	179	191	203	7	6	71.5	5	12	5	7	12
8 FT	14	16	13	13	6	7.5	6	6.5	76.6	38.0	38.0	38.0	7	13	74.5	7	13	44.0	6	7	6	6.5	77.6	180	192	204	7	6	71.0	5	12	5	6.5	0
10 FT	15	18	13	13	6	6.5	6	6	79.5	39.0	39.0	39.0	7	13	80.5	7	13	51.5	6	6.5	6	6	75.6	182	194	206	7	6	71.0	5	12	5	6.5	0
12 FT	17	19	14	13	6	7	6	6	77.8	41.0	41.0	41.0	7	13	79.5	7	13	51.5	6	6	6	6	73.1	183	195	207	7	6	70.5	5	12	5	6	0
14 FT	18	21	15	13	6	7	6	6	76.3	42.0	42.0	42.0	7	12	78.5	7	12	51.0	7	8	6	6	71.8	185	197	209	7	6	70.5	5	12	6	8	0
16 FT	20	22	15	13	6	6.5	7	7.5	79.9	44.0	44.0	44.0	7	12	78.0	7	12	51.0	7	7.5	6	6	70.3	186	198	210	7	6	70.0	5	12	6	8	0
18 FT	22	24	15	13	6	6	7	7	78.8	46.0	46.0	52.0	7	12	77.5	7	12	51.0	7	7	7	7	72.4	188	200	212	7	6	70.0	5	12	6	8	0
20 FT	23	25	16	13	7	7.5	7	7	78.0	47.0	47.0	53.0	8	15	85.0	8	15	58.5	7	6	7	7.5	71.4	189	201	213	8	7	76.0	5	12	6	8	0
22 FT	25	27	17	13	7	7	7	7.5	77.8	49.0	49.0	49.0	7	12	76.0	7	12	50.5	7	6	6	6	68.0	191	203	215	8	7	76.0	5	12	6	7.5	0
24 FT	26	29	17	13	7	7	7	7	76.9	50.0	50.0	56.0	8	15	83.5	8	15	58.5	7	6.5	7	7.5	70.4	193	205	217	8	7	76.0	5	12	6	7.5	0
26 FT	28	31	18	13	7	6.5	7	7	76.9	52.0	52.0	52.0	8	15	82.5	8	15	58.0	7	6.5	6	6	67.1	195	207	219	8	7	76.5	5	12	6	7	0
28 FT	29	33	19	13	7	6	7	7	77.1	53.0	53.0	53.0	8	15	82.0	8	15	58.0	7	6	6	6	67.1	197	209	221	8	6.5	76.5	5	12	6	6.5	0
30 FT	31	34	19	13	8	7.5	7	6.5	76.8	55.0	55.0	55.0	8	15	80.5	8	15	57.0	7	6	6	6	67.0	198	210	222	8	6.5	76.0	5	12	6	6.5	0
32 FT	32	36	20	13	8	7.5	7	6.5	77.3	56.0	56.0	56.0	8	14	79.5	8	14	56.5	7	6	6	6	67.3	200	212	224	8	6	76.5	5	12	6	6.5	0
34 FT	33	37	21	13	8	7	7	6.5	77.6	57.0	57.0	57.0	8	14	78.5	8	14	55.5	7	6	6	6	67.3	201	213	225	8	6	76.5	5	12	6	6	0
36 FT	34	38	21	13	8	7	7	6.5	75.5	58.0	58.0	58.0	8	14	77.5	8	14	55.0	8	7	6	6	64.9	202	214	226	8	6	76.5	5	12	6	6	0
38 FT	35	40	21	13	8	6.5	7	6	75.5	59.0	59.0	59.0	8	13	76.5	8	13	54.0	8	7.5	6	6	65.1	204	216	228	9	7	82.0	5	12	6	6	0
40 FT	36	41	22	13	8	6.5	7	6	76.1	66.0	66.0	66.0	8	13	75.5	8	13	53.5	8	7.5	7	7.5	68.5	205	217	229	9	7	82.0	5	12	6	6	0
42 FT	37	42	23	13	8	6.5	7	6.5	76.9	67.0	67.0	67.0	8	12	75.0	8	12	52.5	8	6.5	7	7.5	68.8	206	218	230	9	7	82.5	5	12	7	7.5	0
44 FT	38	44	24	13	8	6	7	6	77.6	68.0	68.0	68.0	8	12	74.5	8	12	52.0	8	7	7	7	69.4	208	220	232	9	6.5	82.5	5	12	7	7.5	0
46 FT	39	45	25	13	8	6	7	6	78.4	69.0	69.0	69.0	8	12	74.0	8	12	51.0	8	7	7	7	69.8	209	221	233	9	6.5	82.5	5	12	7	7.5	0
48 FT	40	46	26	13	8	6	7	6	79.1	70.0	70.0	70.0	8	12	73.5	8	12	50.0	8	6.5	7	7	70.1	210	222	234	9	6.5	82.5	5	12	7	8	0
50 FT	41	47	27	13	9	7.5	7	6	79.9	71.0	71.0	71.0	8	12	73.0	8	12	49.5	8	6	7	6.5	70.5	211	223	235	9	6	82.5	5	12	7	8	0

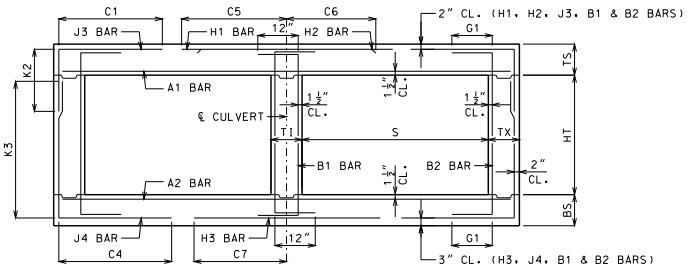

BAR DIMENSIONS DIAGRAM
SYMMETRICAL ABOUT ℄ CULVERT.

GENERAL NOTES:

IF DESIGN FILL IS BETWEEN TABULATED DESIGN FILLS, USE THE NEXT GREATER TABULATED DESIGN FILL, EXCEPT FOR DESIGN FILLS BETWEEN 2 FEET AND 4 FEET. FOR DESIGN FILLS BETWEEN 2 FEET AND 4 FEET USE THE GREATER MEMBER THICKNESS, AREA OF REINFORCEMENT AND BAR DIMENSIONS FROM THE 2 FEET AND 4 FEET TABULATED DESIGN FILLS. AREA OF REINFORCEMENT EQUALS BAR AREA PER FOOT SPACING.

SPECIAL DESIGNS ARE REQUIRED WHEN THE DESIGN FILL IS LESS THAN 1 FOOT OR GREATER THAN 50 FEET.

DIMENSIONS ARE IN INCHES UNLESS OTHERWISE SPECIFIED.

DESIGN FILLS ARE MEASURED FROM THE TOP OF TOP SLAB TO THE TOP OF EARTH FILL OR ROADWAY.

CULVERTS MEET STRENGTH AND SERVICEABILITY REQUIREMENTS FOR THE DESIGN VEHICULAR LIVE LOAD HL-93 MINUS THE LANE LOAD.

MISSOURI HIGHWAYS AND TRANSPORTATION COMMISSION
105 WEST CAPITOL
JEFFERSON CITY, MO 65102
1-888-ASK-MODOT (1-888-275-6636)

STATE OF MISSOURI
DENNIS W. HECKMANN
NUMBER PE-27141
PROFESSIONAL ENGINEER
THIS SHEET HAS BEEN SIGNED, SEALED AND DATED ELECTRONICALLY.

CONCRETE DOUBLE BOX CULVERT

MEMBER THICKNESS
BAR SIZE, SPACING & DIMENSIONS

SPAN (S): 16 FEET
HEIGHT (HT): 14 THRU 16 FEET

DATE EFFECTIVE: 10/01/2011
DATE PREPARED: 9/8/2011

703.47

SHEET NO.
27 OF 27

IF A SEAL IS PRESENT ON THIS SHEET IT HAS BEEN ELECTRONICALLY SEALED AND DATED.

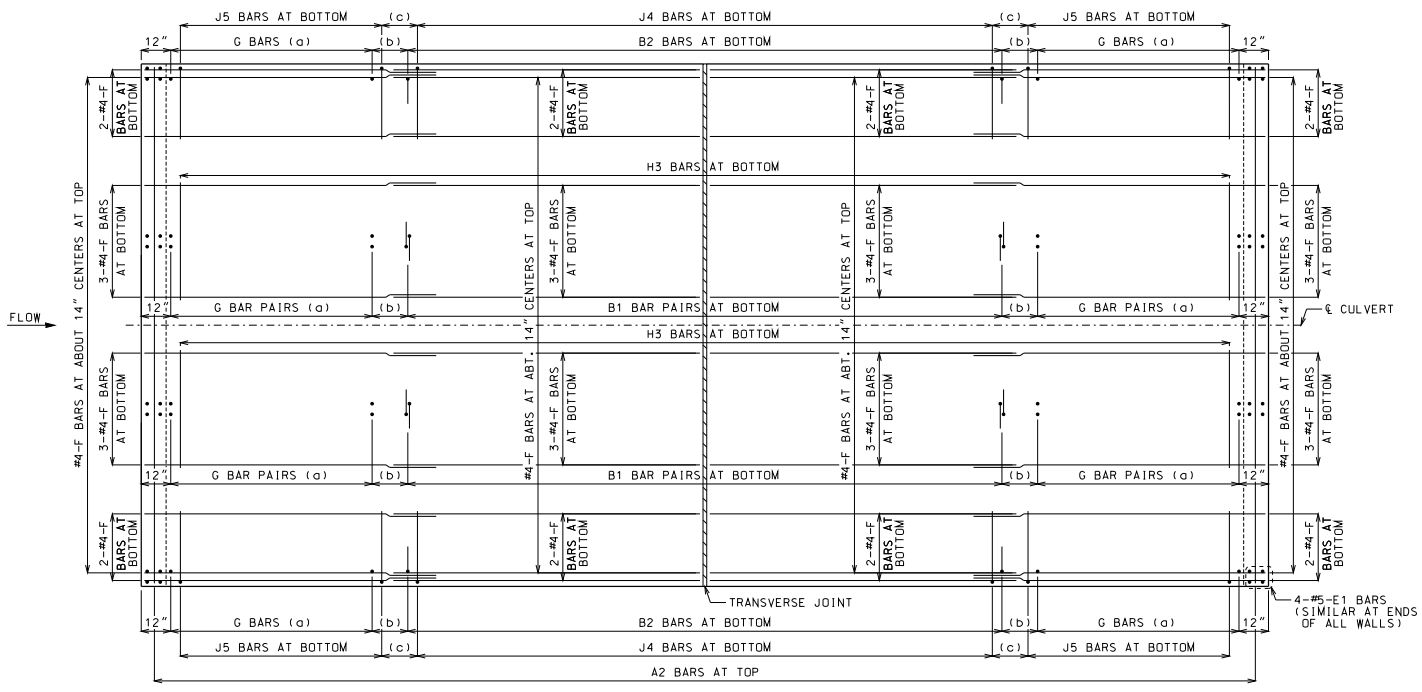

PLAN OF BOTTOM SLAB

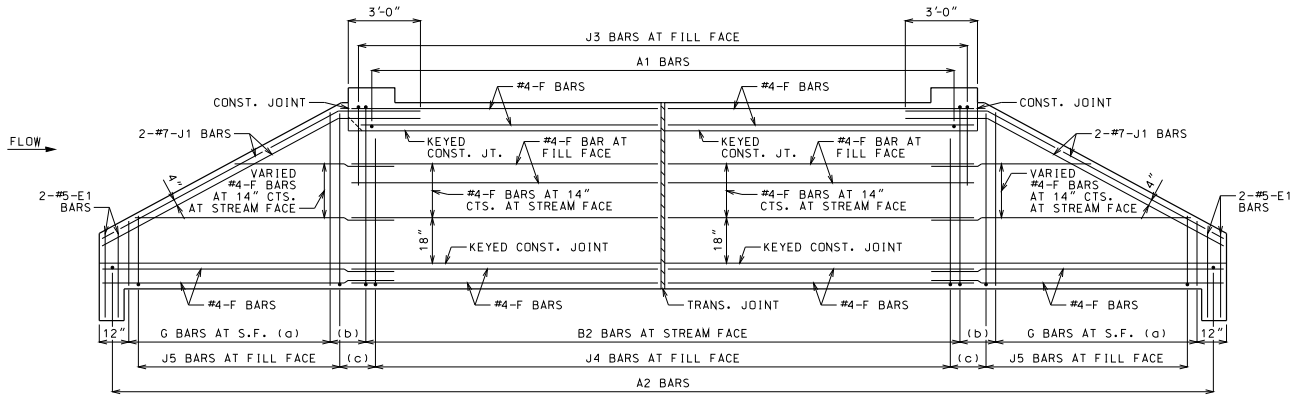

ELEVATION OF EXTERIOR WALL

J1 BARS MAY BE BENT IN FIELD OR SHOP.

LAYING OUT TRANVERSE JOINTS

UNLESS SHOWN ON BRIDGE PLANS

USE A TRANSVERSE JOINT WHEN BARREL LENGTH IS OVER 80 FEET. USE ADDITIONAL JOINTS TO LIMIT CUT SECTION LENGTH AND END SECTION BARREL LENGTH MEASURED ALONG CENTERLINE OF CULVERT TO 50 FEET.

MINIMUM END SECTION LENGTH SHALL BE 3 FEET MEASURED ALONG THE SHORTEST WALL FROM THE INSIDE FACE OF HEADWALL TO THE TRANSVERSE JOINT.

TO AVOID LOCATING TRANSVERSE JOINTS UNDER A TRAVELED WAY WITH DESIGN FILLS 2 FEET OR LESS THE FOLLOWING SHALL APPLY:

BARREL LENGTH UP TO 90 FEET WITHOUT A TRANSVERSE JOINT

CUT SECTION LENGTHS UP TO 60 FEET

WHEN BARREL AND CUT SECTION LENGTH RESTRICTIONS REQUIRE TRANSVERSE JOINTS TO BE LOCATED UNDER A TRAVELED WAY WITH DESIGN FILLS 2 FEET OR LESS, THE JOINTS SHALL BE LOCATED TO MINIMIZE THE LENGTH OF JOINT UNDER THE TRAVELED WAY.

TRAVELED WAY IS THE ROADWAY WIDTH MINUS SHOULDER WIDTHS.

FOR CUT SECTION DETAILS, SEE 703.86.

GENERAL NOTES:

FOR SECTIONS THRU BARREL, WINGS AND HEADWALLS, SEE SHEET 3 OF 3. FOR BAR SIZES, SPACING AND DIMENSIONS OF ALL REINFORCEMENT EXCEPT J5 BARS, SEE 703.87. FOR J5 BARS, SEE 703.37.

CONSTRUCTION JOINT KEY NOT SHOWN FOR CLARITY IN PLAN AND ELEVATION, SEE SHEET 3 OF 3 FOR DETAILS.

DRAWING NOT TO SCALE. FOLLOW DIMENSIONS.

MINIMUM CLEARANCE TO REINFORCING STEEL SHALL BE 1½".

LAP LONGITUDINAL BARS A MINIMUM OF 23" AT SPLICES.

BEVELED HEADWALL SHALL BE LOCATED AT UPSTREAM END.

(a) SAME SIZE AND SPACING AS ADJACENT B BARS

(b) VARIES, 12" MAXIMUM

(c) J4 BAR SPACING

MISSOURI HIGHWAYS AND TRANSPORTATION COMMISSION
105 WEST CAPITOL
JEFFERSON CITY, MO 65102
1-888-ASK-MODOT (1-888-275-6636)

STATE OF MISSOURI
DENNIS W. HECKMAN
NUMBER PE-27141
PROFESSIONAL ENGINEER
THIS SHEET HAS BEEN SIGNED, SEALED AND DATED ELECTRONICALLY.

CONCRETE TRIPLE BOX CULVERT

SKEW: SQUARE
WINGS: STRAIGHT

REINFORCEMENT

DATE EFFECTIVE:	12/01/2011	703.80H	SHEET NO. 1 OF 3
DATE PREPARED:	9/29/2011		

IF A SEAL IS PRESENT ON THIS SHEET IT HAS BEEN ELECTRONICALLY SEALED AND DATED.

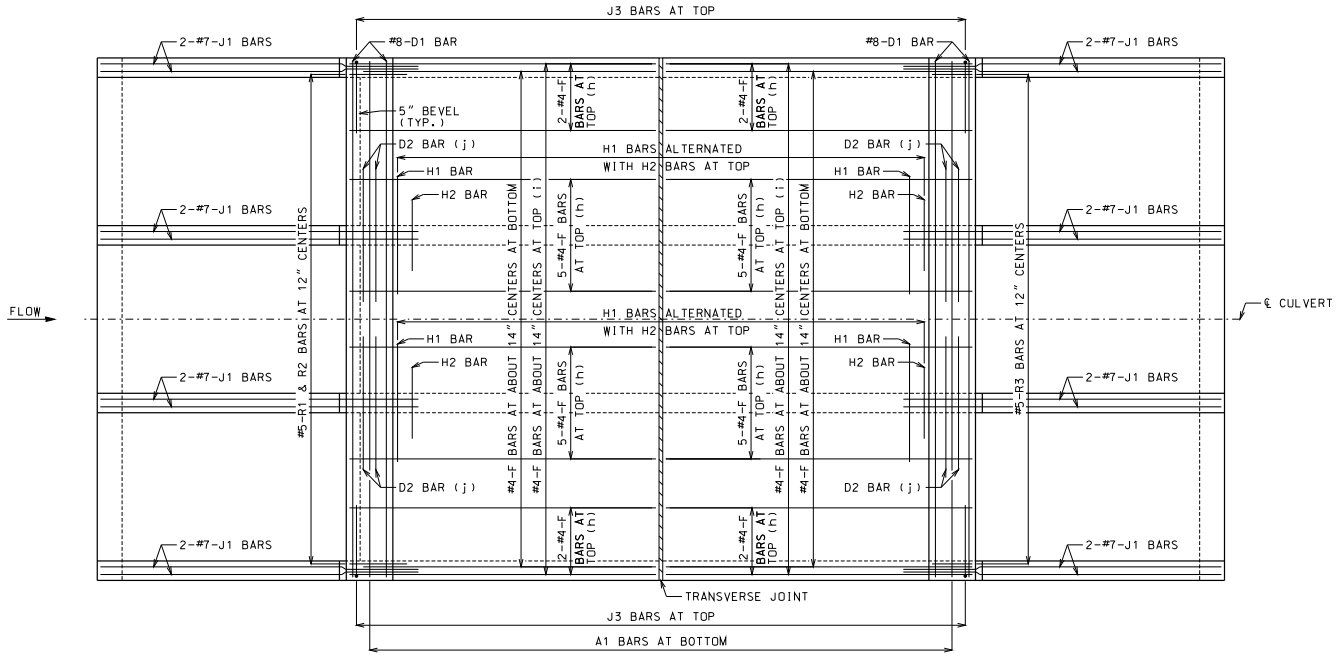

PLAN OF TOP SLAB

B BARS IN WALLS ARE NOT SHOWN FOR CLARITY.
FOR PLACEMENT, SEE SHEET 1 OF 3.

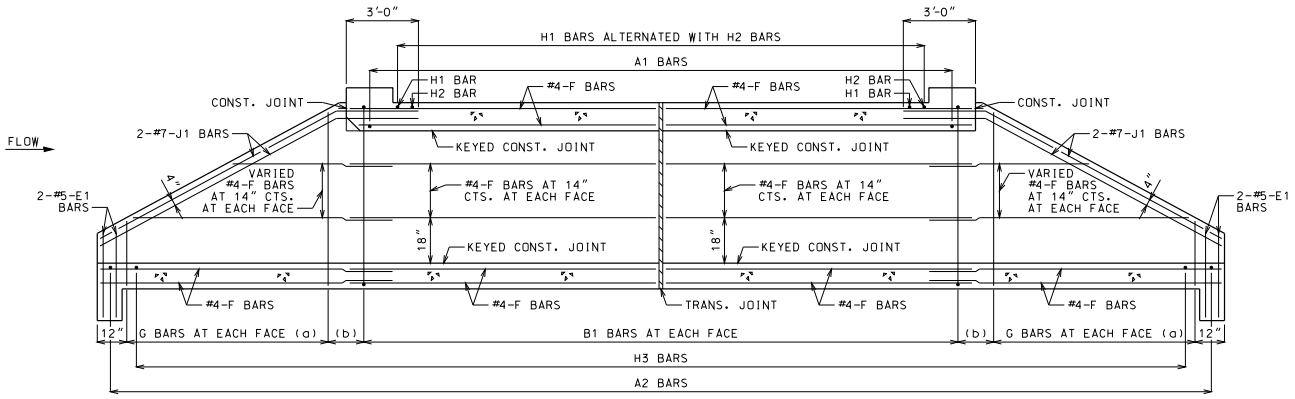

SECTION NEAR INTERIOR WALL

J1 BARS MAY BE BENT IN FIELD OR SHOP.

GENERAL NOTES:

FOR SECTIONS THRU BARREL, WINGS AND HEADWALLS, SEE SHEET 3 OF 3. FOR BAR SIZES, SPACING AND DIMENSIONS OF ALL REINFORCEMENT EXCEPT J5 BARS, SEE 703.87. FOR J5 BARS, SEE 703.37.

CONSTRUCTION JOINT KEY NOT SHOWN FOR CLARITY IN PLAN AND SECTION, SEE SHEET 3 OF 3 FOR DETAILS.

DRAWING NOT TO SCALE. FOLLOW DIMENSIONS.

MINIMUM CLEARANCE TO REINFORCING STEEL SHALL BE 1½".

LAP LONGITUDINAL BARS A MINIMUM OF 23" AT SPLICES.

BEVELED HEADWALL SHALL BE LOCATED AT UPSTREAM END.

(a) SAME SIZE AND SPACING AS ADJACENT B BARS

(b) VARIES, 12" MAXIMUM

(c) NOT SPECIFIED ON THIS SHEET

(d) NOT SPECIFIED ON THIS SHEET

(e) NOT SPECIFIED ON THIS SHEET

(f) NOT SPECIFIED ON THIS SHEET

(g) NOT SPECIFIED ON THIS SHEET

(h) FOR DESIGN FILLS OVER 2'-0"

(i) FOR DESIGN FILLS 2'-0" OR LESS

(j) NOT REQUIRED FOR CLEAR SPANS ≤ 10'-0"
#8 FOR CLEAR SPAN > 10'-0"
#9 FOR CLEAR SPAN > 13'-0"

IF REQUIRED, THE MINIMUM LENGTH EACH SIDE OF ℄ WALL SHALL BE THE GREATER OF 48 BAR DIAMETERS OR ¼ CLEAR SPAN. THE CLEAR SPAN IS PARALLEL TO LONG DIRECTION OF HEADWALL.

IF A SEAL IS PRESENT ON THIS SHEET IT HAS BEEN ELECTRONICALLY SEALED AND DATED.

MISSOURI HIGHWAYS AND TRANSPORTATION COMMISSION
105 WEST CAPITOL
JEFFERSON CITY, MO 65102
1-888-ASK-MODOT (1-888-275-6636)

STATE OF MISSOURI
DENNIS W. HECKMAN
NUMBER PE-27141
PROFESSIONAL ENGINEER
THIS SHEET HAS BEEN SIGNED, SEALED AND DATED ELECTRONICALLY.

CONCRETE TRIPLE BOX CULVERT

SKEW: SQUARE
WINGS: STRAIGHT

REINFORCEMENT

DATE EFFECTIVE:	12/01/2011	703.80H	SHEET NO. 2 OF 3
DATE PREPARED:	9/29/2011		

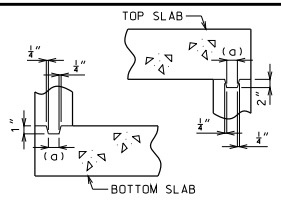

KEYED CONSTRUCTION JOINT

(a) APPROXIMATELY ONE-THIRD OF WALL THICKNESS

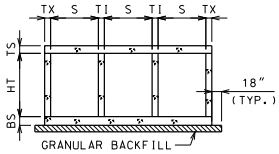

GRANULAR BACKFILL LIMITS AND MEMBER DIMENSIONS

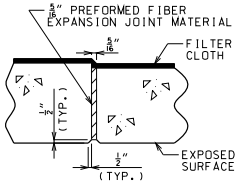

TRANSVERSE JOINT THRU BARREL

PREFORMED FIBER EXPANSION JOINT MATERIAL SHALL BE SECURELY STITCHED TO ONE FACE OF THE CONCRETE WITH NO. 10 GAGE COPPER WIRE OR NO. 12 GAGE SOFT DRAWN GALVANIZED STEEL WIRE.

FILTER CLOTH 3 FEET IN WIDTH AND DOUBLE THICKNESS SHALL BE CENTERED ON TRANSVERSE JOINTS IN TOP SLAB AND SIDEWALLS WITH EDGES SEALED WITH MASTIC OR TWO SIDED TAPE. FILTER CLOTH SHALL BE A SUBSURFACE DRAINAGE GEOTEXTILE IN ACCORDANCE WITH SECTION 1011 OF THE STANDARD SPECIFICATIONS FOR HIGHWAY CONSTRUCTION. COST OF FURNISHING AND INSTALLING FILTER CLOTH WILL BE CONSIDERED COMPLETELY COVERED BY THE CONTRACT UNIT PRICE FOR OTHER ITEMS.

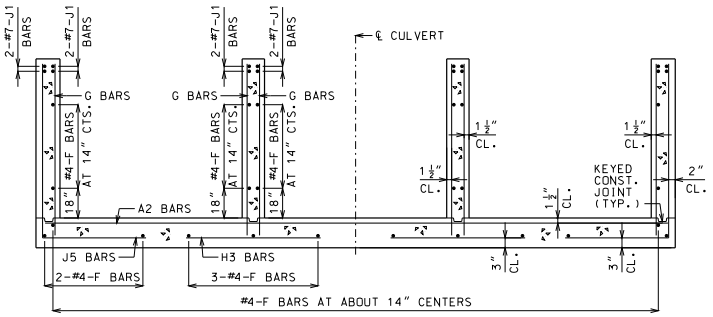

UPSTREAM AND DOWNSTREAM WINGS REINFORCEMENT

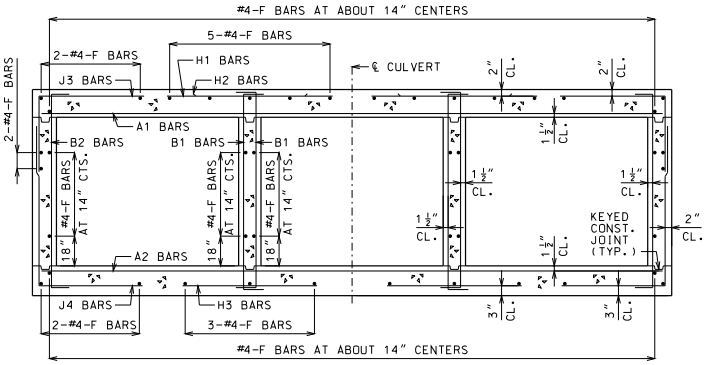

BARREL REINFORCEMENT

FOR DESIGN FILLS OVER 2'-0"

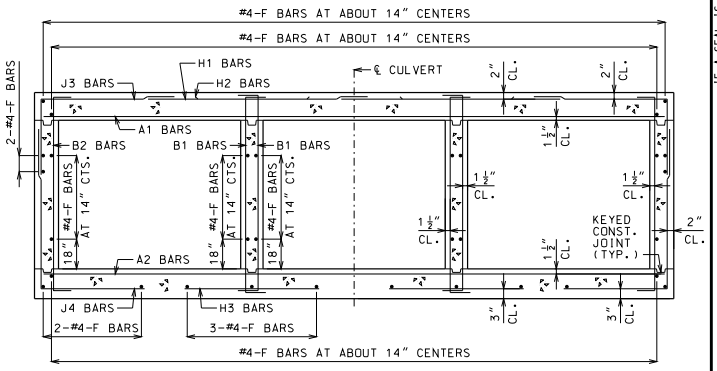

BARREL REINFORCEMENT

FOR DESIGN FILLS 2'-0" OR LESS

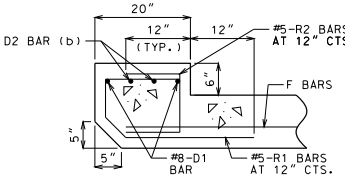

UPSTREAM HEADWALL REINFORCEMENT

NEAR INTERIOR WALL

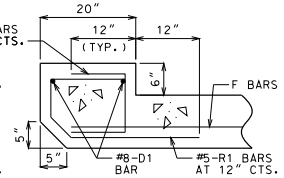

UPSTREAM HEADWALL REINFORCEMENT

NEAR MIDSPAN

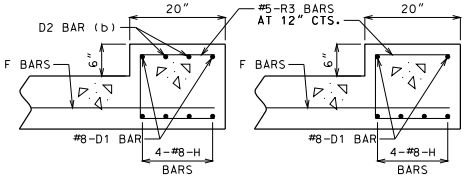

DOWNSTREAM HEADWALL REINFORCEMENT

NEAR INTERIOR WALL

DOWNSTREAM HEADWALL REINFORCEMENT

NEAR MIDSPAN

(b) NOT REQUIRED FOR CLEAR SPANS ≤ 10'-0"
#8 FOR CLEAR SPAN > 10'-0"
#9 FOR CLEAR SPAN > 13'-0"

IF D2 BARS ARE REQUIRED, THE MINIMUM LENGTH EACH SIDE OF ℄ WALL SHALL BE THE GREATER OF 48 BAR DIAMETERS OR ¼ CLEAR SPAN. THE CLEAR SPAN IS PARALLEL TO LONG DIRECTION OF HEADWALL.

GENERAL NOTES:

FOR MEMBER THICKNESS AND FOR BAR SIZES, SPACING AND DIMENSIONS OF ALL REINFORCEMENT EXCEPT J5 BARS, SEE 703.87. FOR J5 BARS, SEE 703.37.

BARREL AND WINGS SECTIONS ARE SYMMETRICAL ABOUT AND NORMAL TO ℄ CULVERT. HEADWALL SECTIONS ARE NORMAL TO LONG DIRECTION OF HEADWALL.

DRAWING NOT TO SCALE. FOLLOW DIMENSIONS.

MINIMUM CLEARANCE TO REINFORCING STEEL SHALL BE 1½".

MISSOURI HIGHWAYS AND TRANSPORTATION COMMISSION
105 WEST CAPITOL
JEFFERSON CITY, MO 65102
1-888-ASK-MODOT (1-888-275-6636)

STATE OF MISSOURI
DENNIS W. HECKMAN
NUMBER PE-27141
PROFESSIONAL ENGINEER
THIS SHEET HAS BEEN SIGNED, SEALED AND DATED ELECTRONICALLY.

CONCRETE TRIPLE BOX CULVERT

SKEW: SQUARE
WINGS: STRAIGHT

SECTIONS

DATE EFFECTIVE:	12/01/2011	703.80H	SHEET NO. 3 OF 3
DATE PREPARED:	9/29/2011		

IF A SEAL IS PRESENT ON THIS SHEET IT HAS BEEN ELECTRONICALLY SEALED AND DATED.

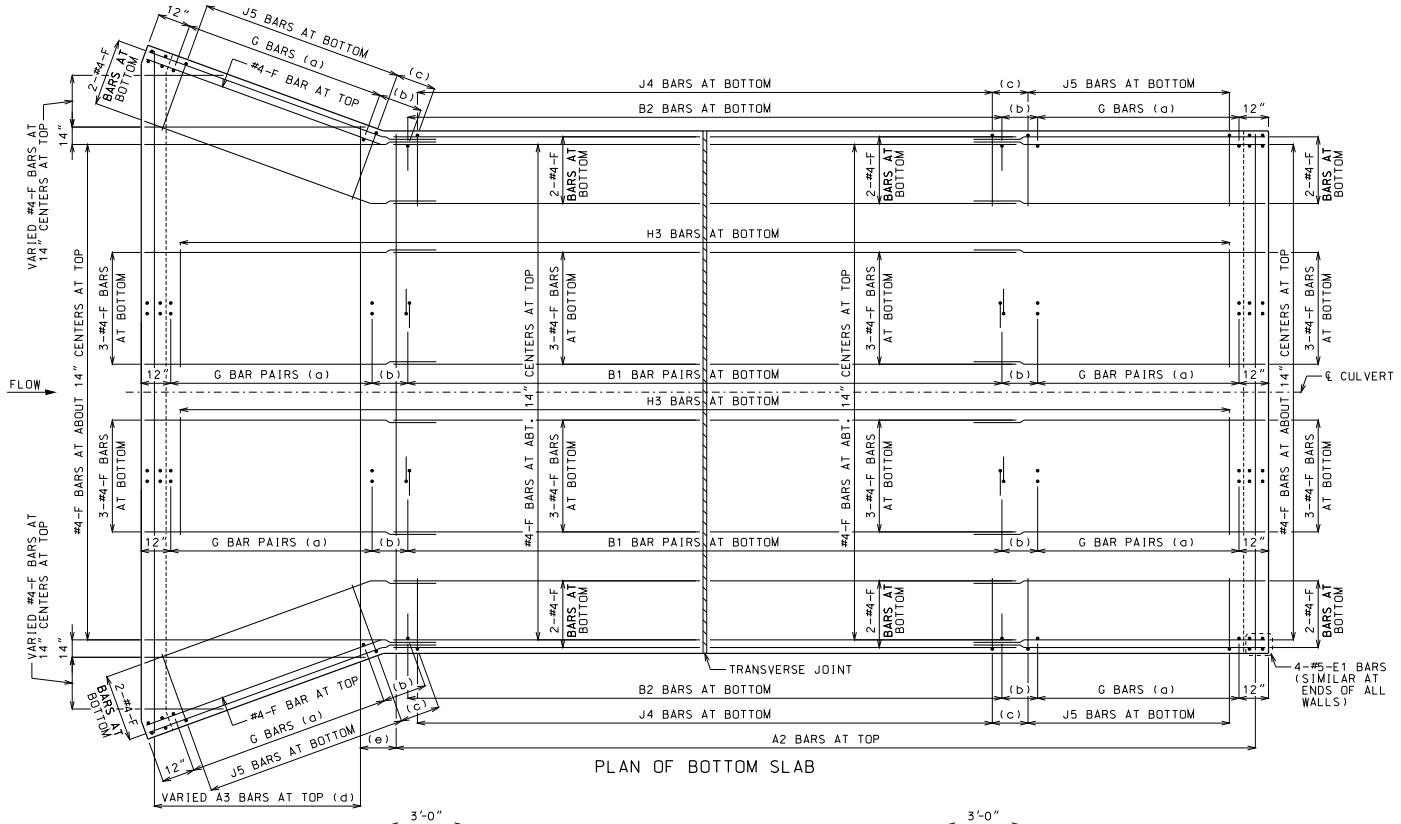

PLAN OF BOTTOM SLAB

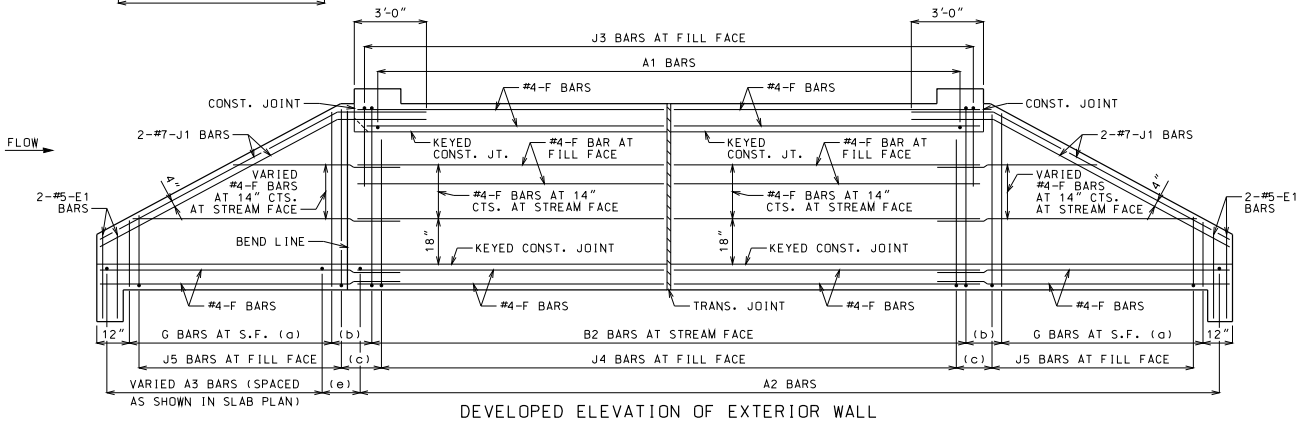

DEVELOPED ELEVATION OF EXTERIOR WALL

J1 BARS MAY BE BENT IN FIELD OR SHOP.

LAYING OUT TRANVERSE JOINTS

UNLESS SHOWN ON BRIDGE PLANS

USE A TRANSVERSE JOINT WHEN BARREL LENGTH IS OVER 80 FEET. USE ADDITIONAL JOINTS TO LIMIT CUT SECTION LENGTH AND END SECTION BARREL LENGTH MEASURED ALONG CENTERLINE OF CULVERT TO 50 FEET.

MINIMUM END SECTION LENGTH SHALL BE 3 FEET MEASURED ALONG THE SHORTEST WALL FROM THE INSIDE FACE OF HEADWALL TO THE TRANSVERSE JOINT.

TO AVOID LOCATING TRANSVERSE JOINTS UNDER A TRAVELED WAY WITH DESIGN FILLS 2 FEET OR LESS THE FOLLOWING SHALL APPLY:

BARREL LENGTH UP TO 90 FEET WITHOUT A TRANSVERSE JOINT

CUT SECTION LENGTHS UP TO 60 FEET

WHEN BARREL AND CUT SECTION LENGTH RESTRICTIONS REQUIRE TRANSVERSE JOINTS TO BE LOCATED UNDER A TRAVELED WAY WITH DESIGN FILLS 2 FEET OR LESS, THE JOINTS SHALL BE LOCATED TO MINIMIZE THE LENGTH OF JOINT UNDER THE TRAVELED WAY.

TRAVELED WAY IS THE ROADWAY WIDTH MINUS SHOULDER WIDTHS.

FOR CUT SECTION DETAILS, SEE 703.86.

GENERAL NOTES:

FOR SECTIONS THRU BARREL, WINGS AND HEADWALLS, SEE SHEET 3 OF 3. FOR BAR SIZES, SPACING AND DIMENSIONS OF ALL REINFORCEMENT EXCEPT J5 BARS, SEE 703.87. FOR J5 BARS, SEE 703.37.

CONSTRUCTION JOINT KEY NOT SHOWN FOR CLARITY IN PLAN AND ELEVATION, SEE SHEET 3 OF 3 FOR DETAILS.

DRAWING NOT TO SCALE. FOLLOW DIMENSIONS.

MINIMUM CLEARANCE TO REINFORCING STEEL SHALL BE 1½".

LAP LONGITUDINAL BARS A MINIMUM OF 23" AT SPLICES.

BEVELED HEADWALL SHALL BE LOCATED AT UPSTREAM END.

(a) SAME SIZE AND SPACING AS ADJACENT B BARS

(b) VARIES, 12" MAXIMUM

(c) J4 BAR SPACING

(d) SAME SIZE AND SPACING AS A2 BARS

(e) A2 BAR SPACING

MISSOURI HIGHWAYS AND TRANSPORTATION COMMISSION
105 WEST CAPITOL
JEFFERSON CITY, MO 65102
1-888-ASK-MODOT (1-888-275-6636)

STATE OF MISSOURI
DENNIS W. HECKMAN
NUMBER PE-27141
PROFESSIONAL ENGINEER
THIS SHEET WAS SIGNED, SEALED AND DATED ELECTRONICALLY.

CONCRETE TRIPLE BOX CULVERT

SKEW: SQUARE
WINGS: FLARED

REINFORCEMENT

DATE EFFECTIVE:	12/01/2011	703.81H	SHEET NO. 1 OF 3
DATE PREPARED:	9/29/2011		

IF A SEAL IS PRESENT ON THIS SHEET IT HAS BEEN ELECTRONICALLY SEALED AND DATED.

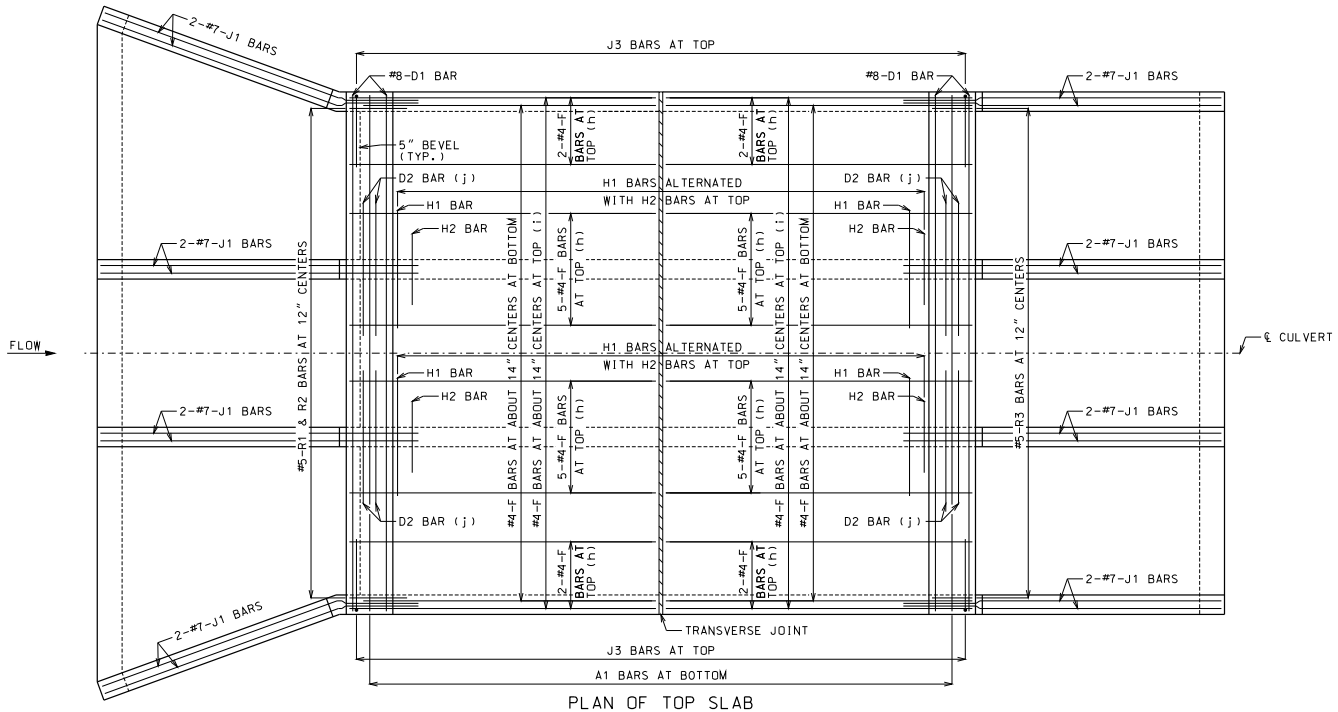

PLAN OF TOP SLAB

B BARS IN WALLS ARE NOT SHOWN FOR CLARITY.
FOR PLACEMENT, SEE SHEET 1 OF 3.

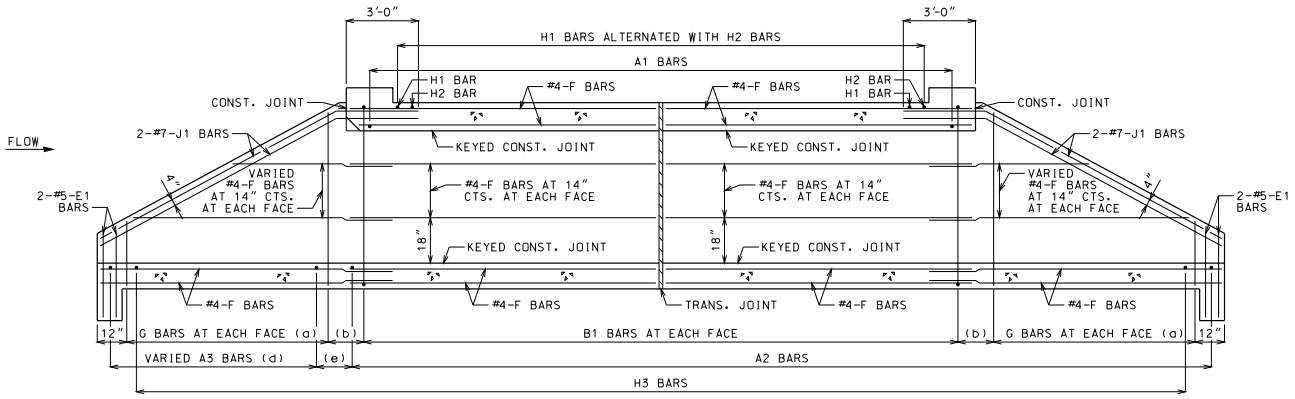

SECTION NEAR INTERIOR WALL

J1 BARS MAY BE BENT IN FIELD OR SHOP.

GENERAL NOTES:

FOR SECTIONS THRU BARREL, WINGS AND HEADWALLS, SEE SHEET 3 OF 3. FOR BAR SIZES, SPACING AND DIMENSIONS OF ALL REINFORCEMENT EXCEPT J5 BARS, SEE 703.87. FOR J5 BARS, SEE 703.37.

CONSTRUCTION JOINT KEY NOT SHOWN FOR CLARITY IN PLAN AND SECTION, SEE SHEET 3 OF 3 FOR DETAILS.

DRAWING NOT TO SCALE. FOLLOW DIMENSIONS.

MINIMUM CLEARANCE TO REINFORCING STEEL SHALL BE 1½".

LAP LONGITUDINAL BARS A MINIMUM OF 23" AT SPLICES.

BEVELED HEADWALL SHALL BE LOCATED AT UPSTREAM END.

(a) SAME SIZE AND SPACING AS ADJACENT B BARS

(b) VARIES, 12" MAXIMUM

(c) NOT SPECIFIED ON THIS SHEET

(d) SAME SIZE AND SPACING AS A2 BARS

(e) A2 BAR SPACING

(f) NOT SPECIFIED ON THIS SHEET

(g) NOT SPECIFIED ON THIS SHEET

(h) FOR DESIGN FILLS OVER 2'-0"

(i) FOR DESIGN FILLS 2'-0" OR LESS

(j) NOT REQUIRED FOR CLEAR SPANS ≤ 10'-0"
#8 FOR CLEAR SPAN > 10'-0"
#9 FOR CLEAR SPAN > 13'-0"

IF REQUIRED, THE MINIMUM LENGTH EACH SIDE OF ℄ WALL SHALL BE THE GREATER OF 48 BAR DIAMETERS OR ¼ CLEAR SPAN. THE CLEAR SPAN IS PARALLEL TO LONG DIRECTION OF HEADWALL.

IF A SEAL IS PRESENT ON THIS SHEET IT HAS BEEN ELECTRONICALLY SEALED AND DATED.

MISSOURI HIGHWAYS AND TRANSPORTATION COMMISSION
105 WEST CAPITOL
JEFFERSON CITY, MO 65102
1-888-ASK-MODOT (1-888-275-6636)

STATE OF MISSOURI
DENNIS W. HECKMAN
NUMBER PE-27141
PROFESSIONAL ENGINEER
THIS SHEET HAS BEEN SIGNED, SEALED AND DATED ELECTRONICALLY.

CONCRETE TRIPLE BOX CULVERT

SKEW: SQUARE
WINGS: FLARED

REINFORCEMENT

DATE EFFECTIVE: 12/01/2011
DATE PREPARED: 9/29/2011

703.81H

SHEET NO. 2 OF 3

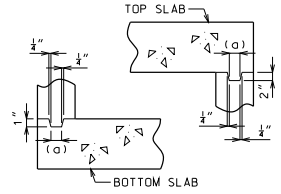

KEYED CONSTRUCTION JOINT

(a) APPROXIMATELY ONE-THIRD OF WALL THICKNESS

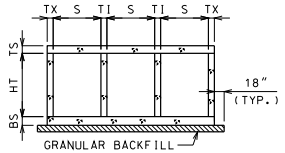

GRANULAR BACKFILL LIMITS AND MEMBER DIMENSIONS

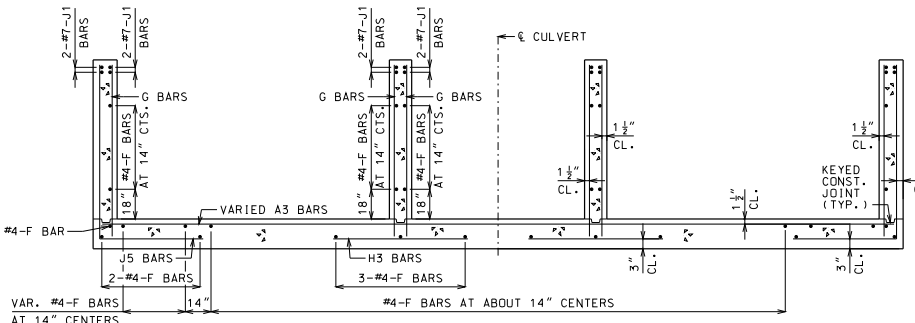

UPSTREAM FLARED WINGS REINFORCEMENT

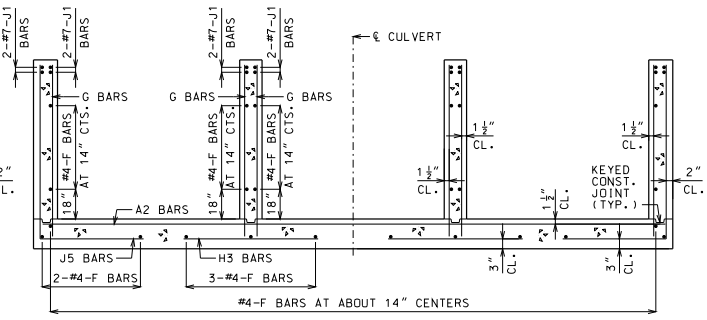

DOWNSTREAM WINGS REINFORCEMENT

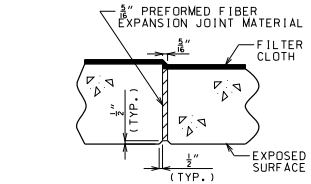

TRANSVERSE JOINT THRU BARREL

PREFORMED FIBER EXPANSION JOINT MATERIAL SHALL BE SECURELY STITCHED TO ONE FACE OF THE CONCRETE WITH NO. 10 GAGE COPPER WIRE OR NO. 12 GAGE SOFT DRAWN GALVANIZED STEEL WIRE.

FILTER CLOTH 3 FEET IN WIDTH AND DOUBLE THICKNESS SHALL BE CENTERED ON TRANSVERSE JOINTS IN TOP SLAB AND SIDEWALLS WITH EDGES SEALED WITH MASTIC OR TWO SIDED TAPE. FILTER CLOTH SHALL BE A SUBSURFACE DRAINAGE GEOTEXTILE IN ACCORDANCE WITH SECTION 1011 OF THE STANDARD SPECIFICATIONS FOR HIGHWAY CONSTRUCTION. COST OF FURNISHING AND INSTALLING FILTER CLOTH WILL BE CONSIDERED COMPLETELY COVERED BY THE CONTRACT UNIT PRICE FOR OTHER ITEMS.

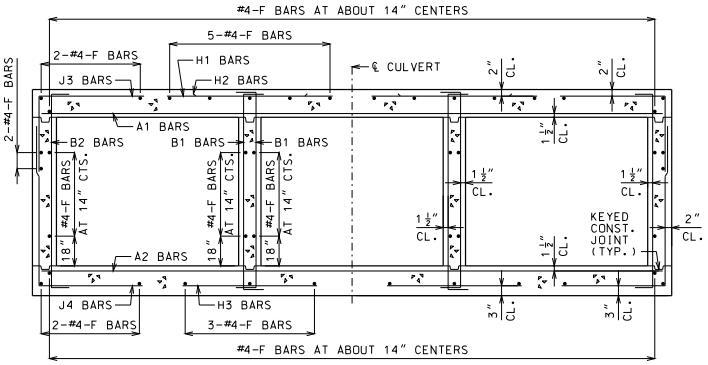

BARREL REINFORCEMENT

FOR DESIGN FILLS OVER 2'-0"

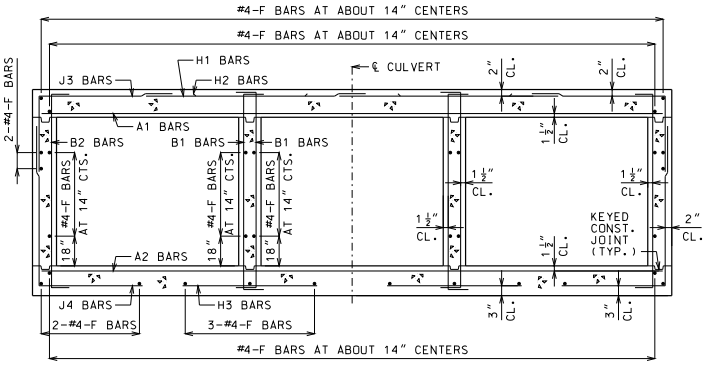

BARREL REINFORCEMENT

FOR DESIGN FILLS 2'-0" OR LESS

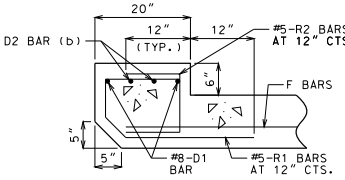

UPSTREAM HEADWALL REINFORCEMENT

NEAR INTERIOR WALL

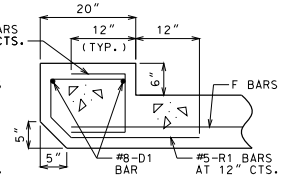

UPSTREAM HEADWALL REINFORCEMENT

NEAR MIDSPAN

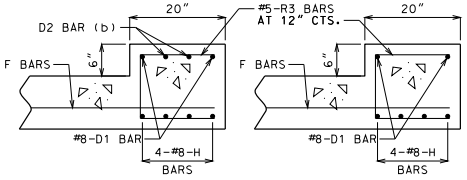

DOWNSTREAM HEADWALL REINFORCEMENT

NEAR INTERIOR WALL

DOWNSTREAM HEADWALL REINFORCEMENT

NEAR MIDSPAN

(b) NOT REQUIRED FOR CLEAR SPANS ≤ 10'-0"
#8 FOR CLEAR SPAN > 10'-0"
#9 FOR CLEAR SPAN > 13'-0"

IF D2 BARS ARE REQUIRED, THE MINIMUM LENGTH EACH SIDE OF ℄ WALL SHALL BE THE GREATER OF 48 BAR DIAMETERS OR ¼ CLEAR SPAN. THE CLEAR SPAN IS PARALLEL TO LONG DIRECTION OF HEADWALL.

GENERAL NOTES:

FOR MEMBER THICKNESS AND FOR BAR SIZES, SPACING AND DIMENSIONS OF ALL REINFORCEMENT EXCEPT J5 BARS, SEE 703.87. FOR J5 BARS, SEE 703.37.

BARREL AND WINGS SECTIONS ARE SYMMETRICAL ABOUT AND NORMAL TO ℄ CULVERT. HEADWALL SECTIONS ARE NORMAL TO LONG DIRECTION OF HEADWALL.

DRAWING NOT TO SCALE. FOLLOW DIMENSIONS.

MINIMUM CLEARANCE TO REINFORCING STEEL SHALL BE 1½".

MISSOURI HIGHWAYS AND TRANSPORTATION COMMISSION
105 WEST CAPITOL
JEFFERSON CITY, MO 65102
1-888-ASK-MODOT (1-888-275-6636)

STATE OF MISSOURI
DENNIS W. HECKMAN
NUMBER PE-27141
PROFESSIONAL ENGINEER
THIS SHEET HAS BEEN SIGNED, SEALED AND DATED ELECTRONICALLY.

CONCRETE TRIPLE BOX CULVERT

SKEW: SQUARE
WINGS: FLARED

SECTIONS

DATE EFFECTIVE:	12/01/2011	703.81H	SHEET NO. 3 OF 3
DATE PREPARED:	9/29/2011		

IF A SEAL IS PRESENT ON THIS SHEET IT HAS BEEN ELECTRONICALLY SEALED AND DATED.

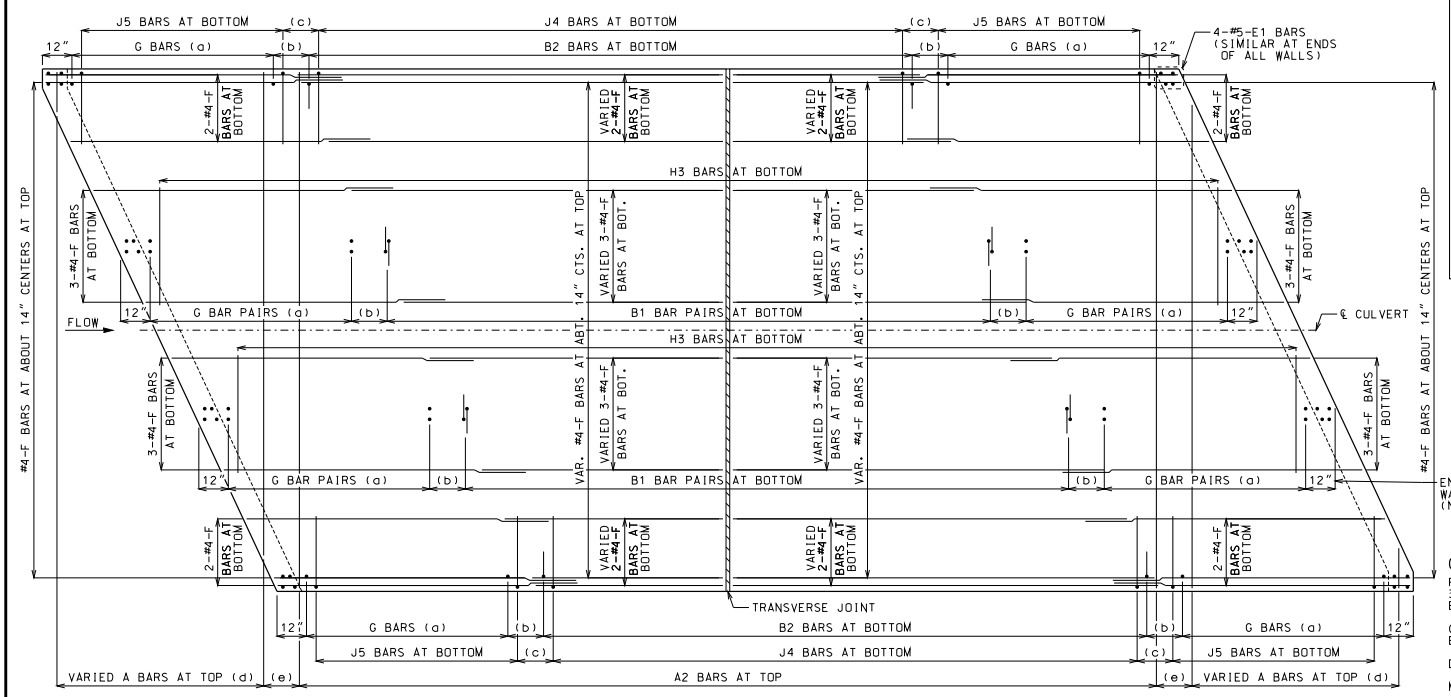

PLAN OF BOTTOM SLAB

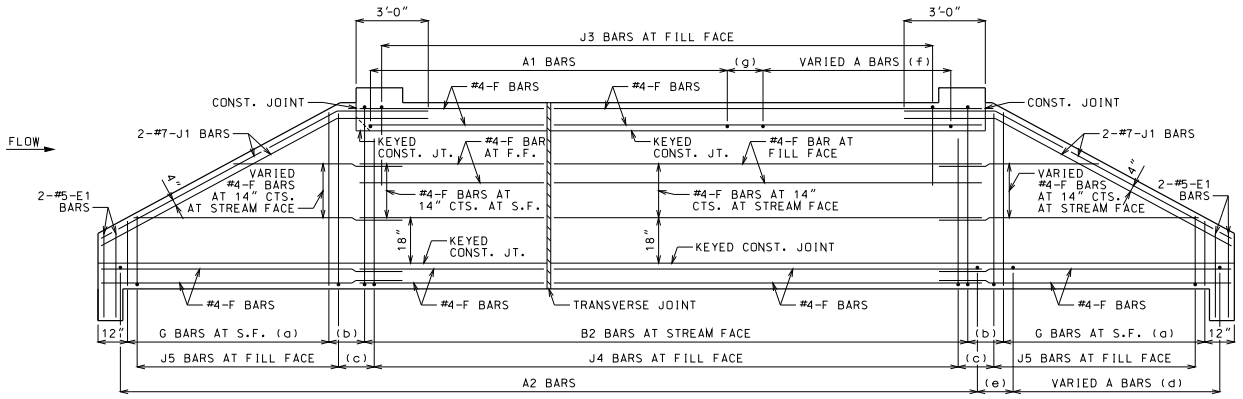

ELEVATION OF EXTERIOR WALL

J1 BARS MAY BE BENT IN FIELD OR SHOP.

LAYING OUT TRANVERSE JOINTS

UNLESS SHOWN ON BRIDGE PLANS

USE A TRANSVERSE JOINT WHEN BARREL LENGTH IS OVER 80 FEET. USE ADDITIONAL JOINTS TO LIMIT CUT SECTION LENGTH AND END SECTION BARREL LENGTH MEASURED ALONG CENTERLINE OF CULVERT TO 50 FEET.

MINIMUM END SECTION LENGTH SHALL BE 3 FEET MEASURED ALONG THE SHORTEST WALL FROM THE INSIDE FACE OF HEADWALL TO THE TRANSVERSE JOINT.

TO AVOID LOCATING TRANSVERSE JOINTS UNDER A TRAVELED WAY WITH DESIGN FILLS 2 FEET OR LESS THE FOLLOWING SHALL APPLY:

BARREL LENGTH UP TO 90 FEET WITHOUT A TRANSVERSE JOINT

CUT SECTION LENGTHS UP TO 60 FEET

WHEN BARREL AND CUT SECTION LENGTH RESTRICTIONS REQUIRE TRANSVERSE JOINTS TO BE LOCATED UNDER A TRAVELED WAY WITH DESIGN FILLS 2 FEET OR LESS, THE JOINTS SHALL BE LOCATED TO MINIMIZE THE LENGTH OF JOINT UNDER THE TRAVELED WAY.

TRAVELED WAY IS THE ROADWAY WIDTH MINUS SHOULDER WIDTHS.

FOR CUT SECTION DETAILS, SEE 703.86.

GENERAL NOTES:

FOR SECTIONS THRU BARREL, WINGS AND HEADWALLS, SEE SHEET 3 OF 3. FOR BAR SIZES, SPACING AND DIMENSIONS OF ALL REINFORCEMENT EXCEPT J5 BARS, SEE 703.87. FOR J5 BARS, SEE 703.37.

CONSTRUCTION JOINT KEY NOT SHOWN FOR CLARITY IN PLAN AND ELEVATION, SEE SHEET 3 OF 3 FOR DETAILS.

DRAWING NOT TO SCALE. FOLLOW DIMENSIONS.

MINIMUM CLEARANCE TO REINFORCING STEEL SHALL BE 1½".

LAP LONGITUDINAL BARS A MINIMUM OF 23" AT SPLICES.

BEVELED HEADWALL SHALL BE LOCATED AT UPSTREAM END.

(a) SAME SIZE AND SPACING AS ADJACENT B BARS

(b) VARIES, 12" MAXIMUM

(c) J4 BAR SPACING

(d) SAME SIZE AND SPACING AS A2 BARS

(e) A2 BAR SPACING

(f) SAME SIZE AND SPACING AS A1 BARS

(g) A1 BAR SPACING

MISSOURI HIGHWAYS AND TRANSPORTATION COMMISSION
105 WEST CAPITOL
JEFFERSON CITY, MO 65102
1-888-ASK-MODOT (1-888-275-6636)

STATE OF MISSOURI
DENNIS W. HECKMAN
NUMBER PE-27141
PROFESSIONAL ENGINEER
THIS SHEET HAS BEEN SIGNED, SEALED AND DATED ELECTRONICALLY.

CONCRETE TRIPLE BOX CULVERT

SKEW: LEFT ADVANCE
WINGS: STRAIGHT

REINFORCEMENT

DATE EFFECTIVE:	12/01/2011	703.82H	SHEET NO. 1 OF 3
DATE PREPARED:	9/29/2011		

IF A SEAL IS PRESENT ON THIS SHEET IT HAS BEEN ELECTRONICALLY SEALED AND DATED.

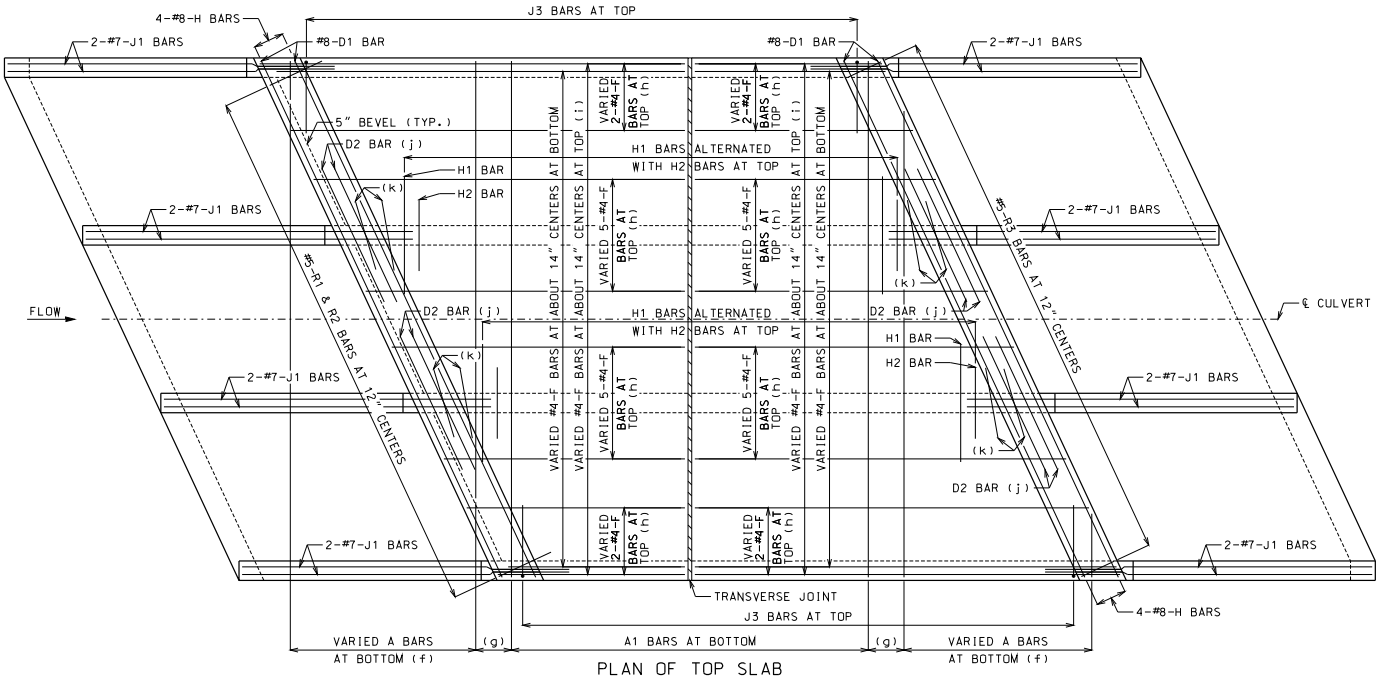

PLAN OF TOP SLAB

B BARS IN WALLS ARE NOT SHOWN FOR CLARITY.
FOR PLACEMENT, SEE SHEET 1 OF 3.

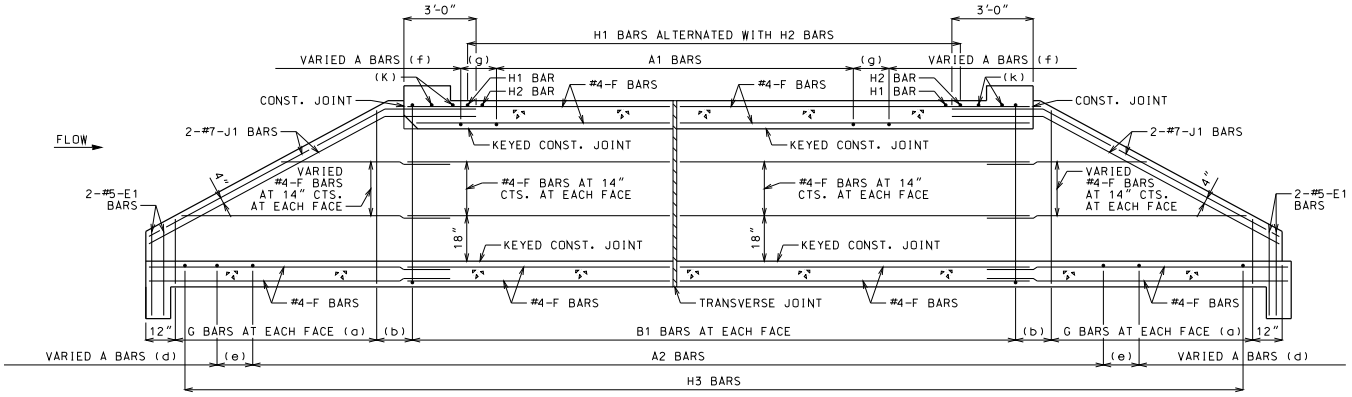

SECTION NEAR INTERIOR WALL

J1 BARS MAY BE BENT IN FIELD OR SHOP.

GENERAL NOTES:

FOR SECTIONS THRU BARREL, WINGS AND HEADWALLS, SEE SHEET 3 OF 3. FOR BAR SIZES, SPACING AND DIMENSIONS OF ALL REINFORCEMENT EXCEPT J5 BARS, SEE 703.87. FOR J5 BARS, SEE 703.37.

CONSTRUCTION JOINT KEY NOT SHOWN FOR CLARITY IN PLAN AND SECTION, SEE SHEET 3 OF 3 FOR DETAILS.

DRAWING NOT TO SCALE. FOLLOW DIMENSIONS.

MINIMUM CLEARANCE TO REINFORCING STEEL SHALL BE 1½".

LAP LONGITUDINAL BARS A MINIMUM OF 23" AT SPLICES.

BEVELED HEADWALL SHALL BE LOCATED AT UPSTREAM END.

(a) SAME SIZE AND SPACING AS ADJACENT B BARS

(b) VARIES, 12" MAXIMUM

(c) NOT SPECIFIED ON THIS SHEET

(d) SAME SIZE AND SPACING AS A2 BARS

(e) A2 BAR SPACING

(f) SAME SIZE AND SPACING AS A1 BARS

(g) A1 BAR SPACING

(h) FOR DESIGN FILLS OVER 2'-0"

(i) FOR DESIGN FILLS 2'-0" OR LESS

(j) NOT REQUIRED FOR CLEAR SPANS ≤ 10'-0"
#8 FOR CLEAR SPAN > 10'-0"
#9 FOR CLEAR SPAN > 13'-0"

IF REQUIRED, THE MINIMUM LENGTH EACH SIDE OF ℄ WALL SHALL BE THE GREATER OF 48 BAR DIAMETERS OR ¼ CLEAR SPAN. THE CLEAR SPAN IS PARALLEL TO LONG DIRECTION OF HEADWALL.

(k) H2 BARS AS REQUIRED, QUANTITY OF BARS VARIES WITH SKEW.

MISSOURI HIGHWAYS AND TRANSPORTATION COMMISSION
105 WEST CAPITOL
JEFFERSON CITY, MO 65102
1-888-ASK-MODOT (1-888-275-6636)

STATE OF MISSOURI
DENNIS W. HECKMAN
NUMBER PE-27141
PROFESSIONAL ENGINEER
THIS SHEET HAS BEEN SIGNED, SEALED AND DATED ELECTRONICALLY.

CONCRETE TRIPLE BOX CULVERT

SKEW: LEFT ADVANCE
WINGS: STRAIGHT

REINFORCEMENT

DATE EFFECTIVE: 12/01/2011
DATE PREPARED: 9/29/2011

703.82H

SHEET NO. 2 OF 3

IF A SEAL IS PRESENT ON THIS SHEET IT HAS BEEN ELECTRONICALLY SEALED AND DATED.

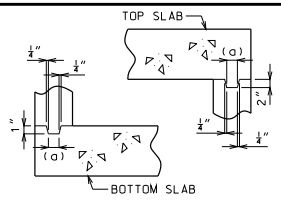

KEYED CONSTRUCTION JOINT

(a) APPROXIMATELY ONE-THIRD OF WALL THICKNESS

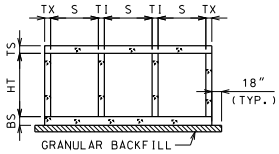

GRANULAR BACKFILL LIMITS AND MEMBER DIMENSIONS

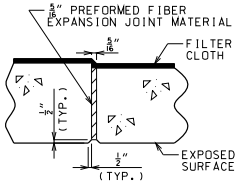

TRANSVERSE JOINT THRU BARREL

PREFORMED FIBER EXPANSION JOINT MATERIAL SHALL BE SECURELY STITCHED TO ONE FACE OF THE CONCRETE WITH NO. 10 GAGE COPPER WIRE OR NO. 12 GAGE SOFT DRAWN GALVANIZED STEEL WIRE.

FILTER CLOTH 3 FEET IN WIDTH AND DOUBLE THICKNESS SHALL BE CENTERED ON TRANSVERSE JOINTS IN TOP SLAB AND SIDEWALLS WITH EDGES SEALED WITH MASTIC OR TWO SIDED TAPE. FILTER CLOTH SHALL BE A SUBSURFACE DRAINAGE GEOTEXTILE IN ACCORDANCE WITH SECTION 1011 OF THE STANDARD SPECIFICATIONS FOR HIGHWAY CONSTRUCTION. COST OF FURNISHING AND INSTALLING FILTER CLOTH WILL BE CONSIDERED COMPLETELY COVERED BY THE CONTRACT UNIT PRICE FOR OTHER ITEMS.

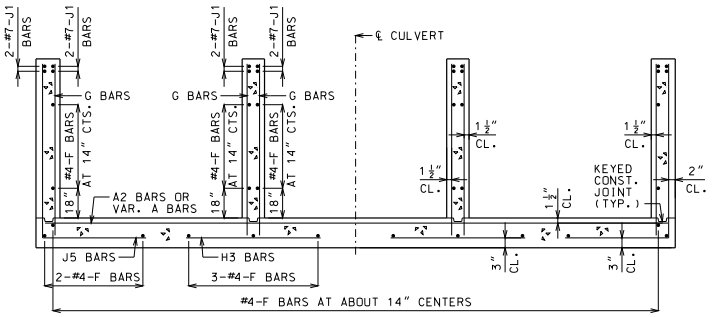

UPSTREAM AND DOWNSTREAM WINGS REINFORCEMENT

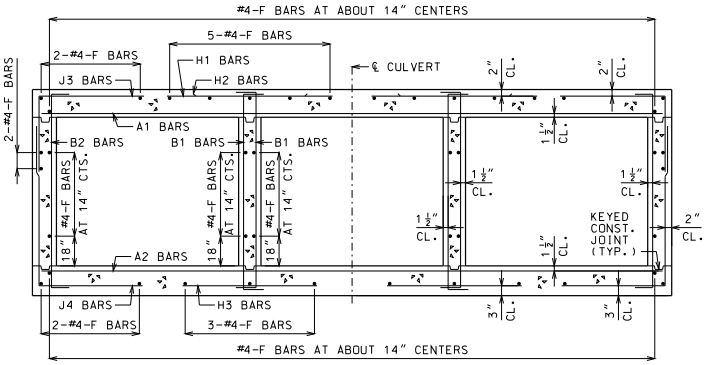

BARREL REINFORCEMENT

FOR DESIGN FILLS OVER 2'-0"

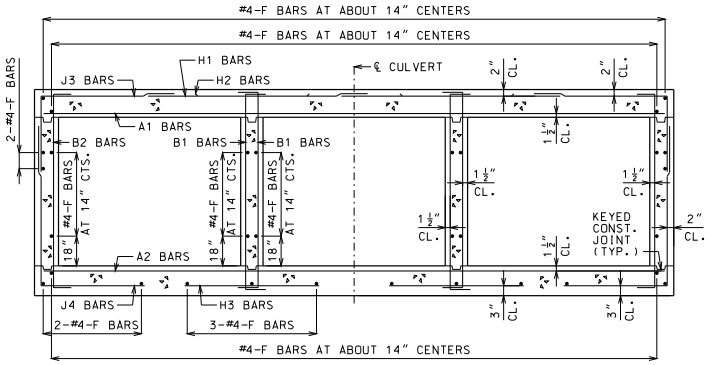

BARREL REINFORCEMENT

FOR DESIGN FILLS 2'-0" OR LESS

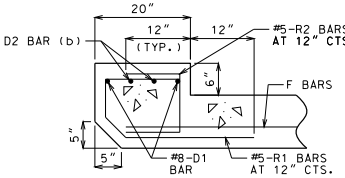

UPSTREAM HEADWALL REINFORCEMENT

NEAR INTERIOR WALL

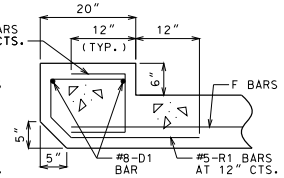

UPSTREAM HEADWALL REINFORCEMENT

NEAR MIDSPAN

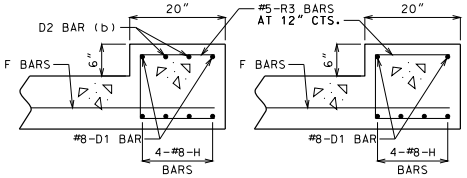

DOWNSTREAM HEADWALL REINFORCEMENT

NEAR INTERIOR WALL

DOWNSTREAM HEADWALL REINFORCEMENT

NEAR MIDSPAN

(b) NOT REQUIRED FOR CLEAR SPANS ≤ 10'-0"
#8 FOR CLEAR SPAN > 10'-0"
#9 FOR CLEAR SPAN > 13'-0"

IF D2 BARS ARE REQUIRED, THE MINIMUM LENGTH EACH SIDE OF ℄ WALL SHALL BE THE GREATER OF 48 BAR DIAMETERS OR ¼ CLEAR SPAN. THE CLEAR SPAN IS PARALLEL TO LONG DIRECTION OF HEADWALL.

GENERAL NOTES:

FOR MEMBER THICKNESS AND FOR BAR SIZES, SPACING AND DIMENSIONS OF ALL REINFORCEMENT EXCEPT J5 BARS, SEE 703.87. FOR J5 BARS, SEE 703.37.

BARREL AND WINGS SECTIONS ARE SYMMETRICAL ABOUT AND NORMAL TO ℄ CULVERT. HEADWALL SECTIONS ARE NORMAL TO LONG DIRECTION OF HEADWALL.

DRAWING NOT TO SCALE. FOLLOW DIMENSIONS.

MINIMUM CLEARANCE TO REINFORCING STEEL SHALL BE 1½".

MISSOURI HIGHWAYS AND TRANSPORTATION COMMISSION
105 WEST CAPITOL
JEFFERSON CITY, MO 65102
1-888-ASK-MODOT (1-888-275-6636)

STATE OF MISSOURI
DENNIS W. HECKMAN
NUMBER PE-27141
PROFESSIONAL ENGINEER
THIS SHEET HAS BEEN SIGNED, SEALED AND DATED ELECTRONICALLY.

CONCRETE TRIPLE BOX CULVERT

SKEW: LEFT ADVANCE
WINGS: STRAIGHT

SECTIONS

DATE EFFECTIVE:	12/01/2011	703.82H	SHEET NO. 3 OF 3
DATE PREPARED:	9/29/2011		

IF A SEAL IS PRESENT ON THIS SHEET IT HAS BEEN ELECTRONICALLY SEALED AND DATED.

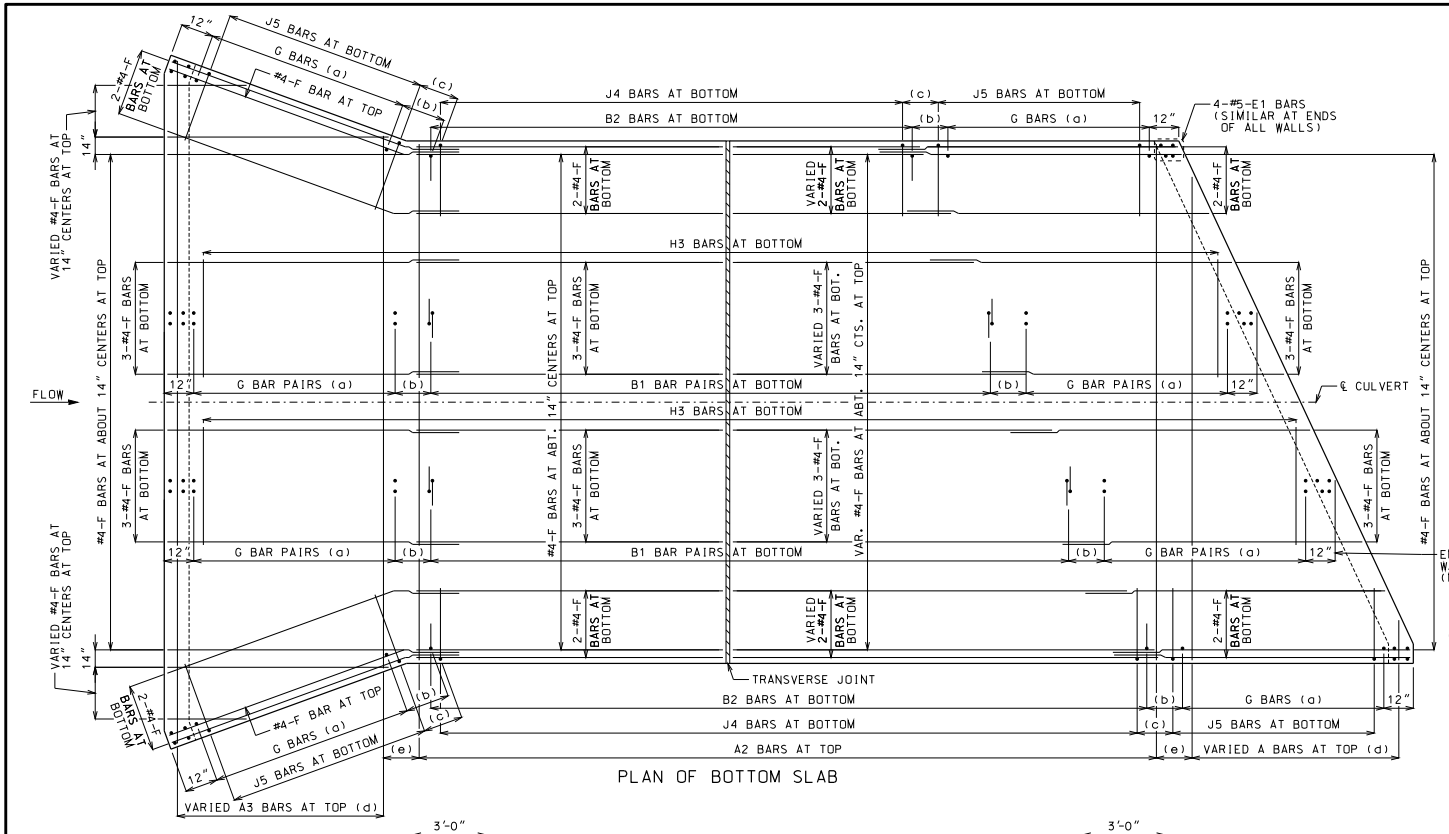

PLAN OF BOTTOM SLAB

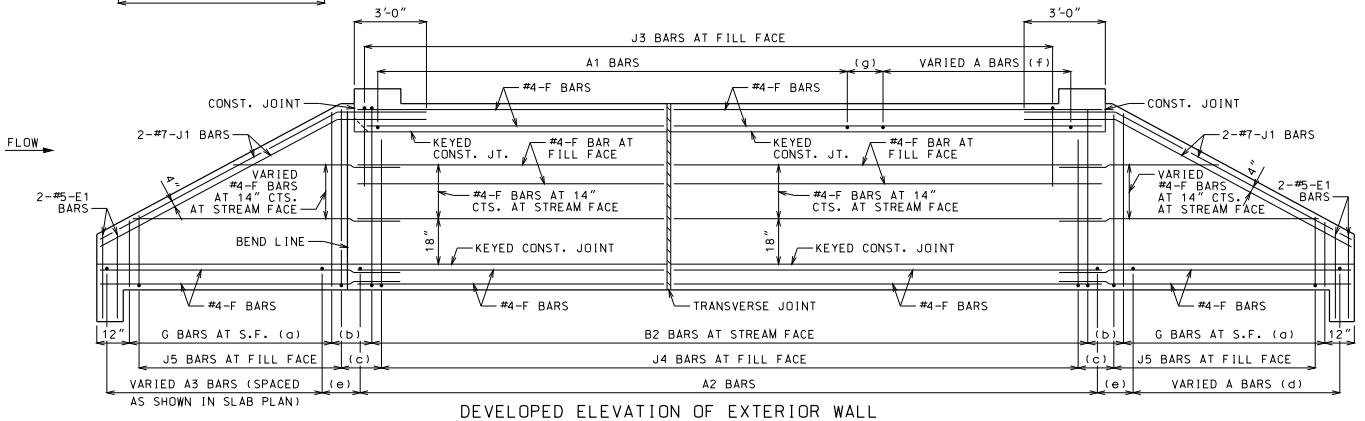

DEVELOPED ELEVATION OF EXTERIOR WALL

J1 BARS MAY BE BENT IN FIELD OR SHOP.

LAYING OUT TRANVERSE JOINTS

UNLESS SHOWN ON BRIDGE PLANS

USE A TRANSVERSE JOINT WHEN BARREL LENGTH IS OVER 80 FEET. USE ADDITIONAL JOINTS TO LIMIT CUT SECTION LENGTH AND END SECTION BARREL LENGTH MEASURED ALONG CENTERLINE OF CULVERT TO 50 FEET.

MINIMUM END SECTION LENGTH SHALL BE 3 FEET MEASURED ALONG THE SHORTEST WALL FROM THE INSIDE FACE OF HEADWALL TO THE TRANSVERSE JOINT.

TO AVOID LOCATING TRANSVERSE JOINTS UNDER A TRAVELED WAY WITH DESIGN FILLS 2 FEET OR LESS THE FOLLOWING SHALL APPLY:

BARREL LENGTH UP TO 90 FEET WITHOUT A TRANSVERSE JOINT

CUT SECTION LENGTHS UP TO 60 FEET

WHEN BARREL AND CUT SECTION LENGTH RESTRICTIONS REQUIRE TRANSVERSE JOINTS TO BE LOCATED UNDER A TRAVELED WAY WITH DESIGN FILLS 2 FEET OR LESS, THE JOINTS SHALL BE LOCATED TO MINIMIZE THE LENGTH OF JOINT UNDER THE TRAVELED WAY.

TRAVELED WAY IS THE ROADWAY WIDTH MINUS SHOULDER WIDTHS.

FOR CUT SECTION DETAILS, SEE 703.86.

GENERAL NOTES:

FOR SECTIONS THRU BARREL, WINGS AND HEADWALLS, SEE SHEET 3 OF 3. FOR BAR SIZES, SPACING AND DIMENSIONS OF ALL REINFORCEMENT EXCEPT J5 BARS, SEE 703.87. FOR J5 BARS, SEE 703.37.

CONSTRUCTION JOINT KEY NOT SHOWN FOR CLARITY IN PLAN AND ELEVATION, SEE SHEET 3 OF 3 FOR DETAILS.

DRAWING NOT TO SCALE. FOLLOW DIMENSIONS.

MINIMUM CLEARANCE TO REINFORCING STEEL SHALL BE 1½".

LAP LONGITUDINAL BARS A MINIMUM OF 23" AT SPLICES.

BEVELED HEADWALL SHALL BE LOCATED AT UPSTREAM END.

(a) SAME SIZE AND SPACING AS ADJACENT B BARS

(b) VARIES, 12" MAXIMUM

(c) J4 BAR SPACING

(d) SAME SIZE AND SPACING AS A2 BARS

(e) A2 BAR SPACING

(f) SAME SIZE AND SPACING AS A1 BARS

(g) A1 BAR SPACING

MISSOURI HIGHWAYS AND TRANSPORTATION COMMISSION
105 WEST CAPITOL
JEFFERSON CITY, MO 65102
1-888-ASK-MODOT (1-888-275-6636)

STATE OF MISSOURI
DENNIS W. HECKMAN
NUMBER PE-27141
PROFESSIONAL ENGINEER
THIS SHEET HAS BEEN SIGNED, SEALED AND DATED ELECTRONICALLY.

CONCRETE TRIPLE BOX CULVERT

SKEW: LEFT ADVANCE
WINGS: FLARED

REINFORCEMENT

DATE EFFECTIVE:	12/01/2011	703.83H	SHEET NO. 1 OF 3
DATE PREPARED:	9/29/2011		

IF A SEAL IS PRESENT ON THIS SHEET IT HAS BEEN ELECTRONICALLY SEALED AND DATED.

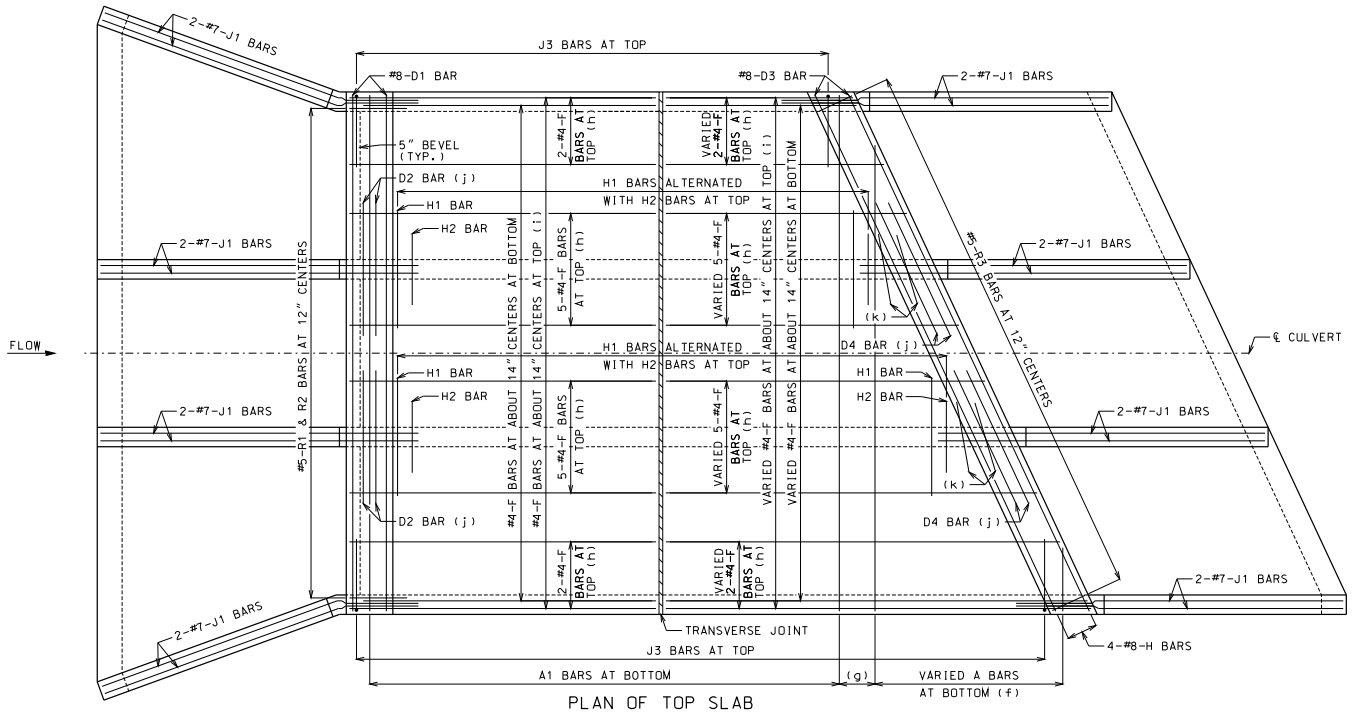

PLAN OF TOP SLAB

B BARS IN WALLS ARE NOT SHOWN FOR CLARITY. FOR PLACEMENT, SEE SHEET 1 OF 3.

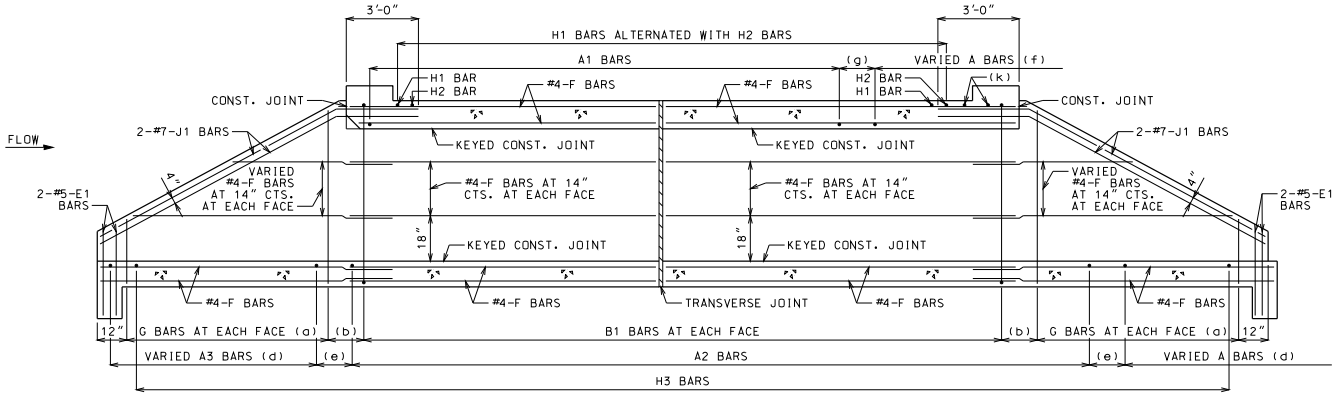

SECTION NEAR INTERIOR WALL

J1 BARS MAY BE BENT IN FIELD OR SHOP.

GENERAL NOTES:

FOR SECTIONS THRU BARREL, WINGS AND HEADWALLS, SEE SHEET 3 OF 3. FOR BAR SIZES, SPACING AND DIMENSIONS OF ALL REINFORCEMENT EXCEPT J5 BARS, SEE 703.87. FOR J5 BARS, SEE 703.37.

CONSTRUCTION JOINT KEY NOT SHOWN FOR CLARITY IN PLAN AND SECTION, SEE SHEET 3 OF 3 FOR DETAILS.

DRAWING NOT TO SCALE. FOLLOW DIMENSIONS.

MINIMUM CLEARANCE TO REINFORCING STEEL SHALL BE 1½".

LAP LONGITUDINAL BARS A MINIMUM OF 23" AT SPLICES.

BEVELED HEADWALL SHALL BE LOCATED AT UPSTREAM END.

(a) SAME SIZE AND SPACING AS ADJACENT B BARS

(b) VARIES, 12" MAXIMUM

(c) NOT SPECIFIED ON THIS SHEET

(d) SAME SIZE AND SPACING AS A2 BARS

(e) A2 BAR SPACING

(f) SAME SIZE AND SPACING AS A1 BARS

(g) A1 BAR SPACING

(h) FOR DESIGN FILLS OVER 2'-0"

(i) FOR DESIGN FILLS 2'-0" OR LESS

(j) NOT REQUIRED FOR CLEAR SPANS ≤ 10'-0"
#8 FOR CLEAR SPAN > 10'-0"
#9 FOR CLEAR SPAN > 13'-0"

IF REQUIRED, THE MINIMUM LENGTH EACH SIDE OF ℄ WALL SHALL BE THE GREATER OF 48 BAR DIAMETERS OR ¼ CLEAR SPAN. THE CLEAR SPAN IS PARALLEL TO LONG DIRECTION OF HEADWALL.

(k) H2 BARS AS REQUIRED, QUANTITY OF BARS VARIES WITH SKEW.

IF A SEAL IS PRESENT ON THIS SHEET IT HAS BEEN ELECTRONICALLY SEALED AND DATED.

MISSOURI HIGHWAYS AND TRANSPORTATION COMMISSION
105 WEST CAPITOL
JEFFERSON CITY, MO 65102
1-888-ASK-MODOT (1-888-275-6636)

STATE OF MISSOURI — DENNIS W. HECKMAN — NUMBER PE-27141 — PROFESSIONAL ENGINEER
THIS SHEET HAS BEEN SIGNED, SEALED AND DATED ELECTRONICALLY.

CONCRETE TRIPLE BOX CULVERT

SKEW: LEFT ADVANCE
WINGS: FLARED

REINFORCEMENT

DATE EFFECTIVE:	12/01/2011	703.83H	SHEET NO. 2 OF 3
DATE PREPARED:	9/29/2011		

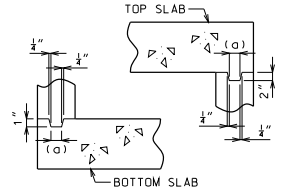

KEYED CONSTRUCTION JOINT

(a) APPROXIMATELY ONE-THIRD OF WALL THICKNESS

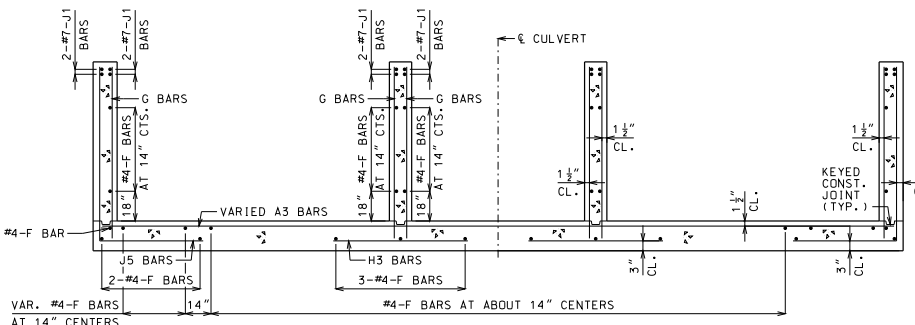

UPSTREAM FLARED WINGS REINFORCEMENT

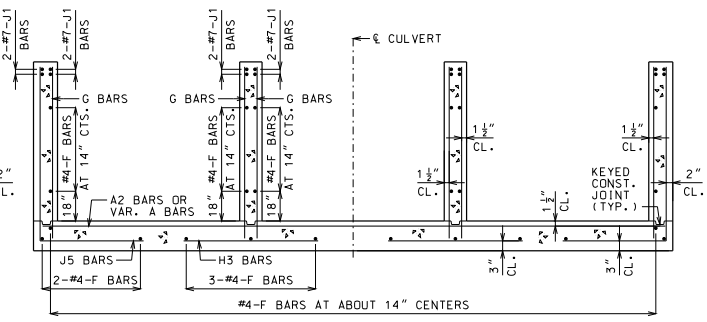

DOWNSTREAM WINGS REINFORCEMENT

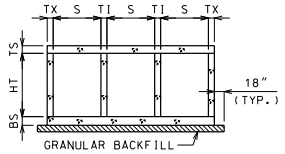

GRANULAR BACKFILL LIMITS AND MEMBER DIMENSIONS

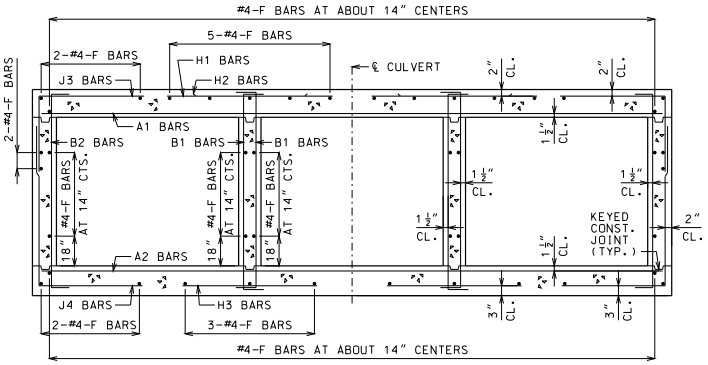

BARREL REINFORCEMENT

FOR DESIGN FILLS OVER 2'-0"

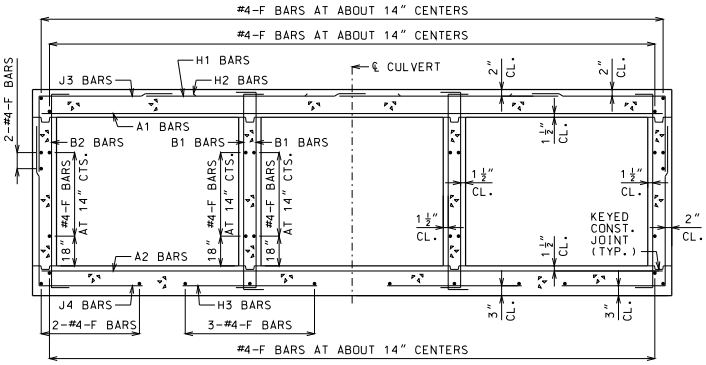

BARREL REINFORCEMENT

FOR DESIGN FILLS 2'-0" OR LESS

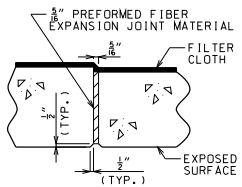

TRANSVERSE JOINT THRU BARREL

PREFORMED FIBER EXPANSION JOINT MATERIAL SHALL BE SECURELY STITCHED TO ONE FACE OF THE CONCRETE WITH NO. 10 GAGE COPPER WIRE OR NO. 12 GAGE SOFT DRAWN GALVANIZED STEEL WIRE.

FILTER CLOTH 3 FEET IN WIDTH AND DOUBLE THICKNESS SHALL BE CENTERED ON TRANSVERSE JOINTS IN TOP SLAB AND SIDEWALLS WITH EDGES SEALED WITH MASTIC OR TWO SIDED TAPE. FILTER CLOTH SHALL BE A SUBSURFACE DRAINAGE GEOTEXTILE IN ACCORDANCE WITH SECTION 1011 OF THE STANDARD SPECIFICATIONS FOR HIGHWAY CONSTRUCTION. COST OF FURNISHING AND INSTALLING FILTER CLOTH WILL BE CONSIDERED COMPLETELY COVERED BY THE CONTRACT UNIT PRICE FOR OTHER ITEMS.

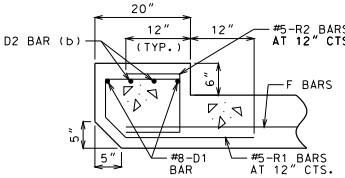

UPSTREAM HEADWALL REINFORCEMENT

NEAR INTERIOR WALL

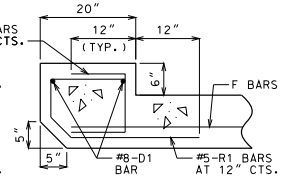

UPSTREAM HEADWALL REINFORCEMENT

NEAR MIDSPAN

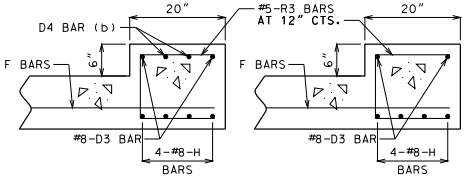

DOWNSTREAM HEADWALL REINFORCEMENT

NEAR INTERIOR WALL

DOWNSTREAM HEADWALL REINFORCEMENT

NEAR MIDSPAN

(b) NOT REQUIRED FOR CLEAR SPANS ≤ 10'-0"
#8 FOR CLEAR SPAN > 10'-0"
#9 FOR CLEAR SPAN > 13'-0"

IF D2 AND D4 BARS ARE REQUIRED, THE MINIMUM LENGTH EACH SIDE OF ℄ WALL SHALL BE THE GREATER OF 48 BAR DIAMETERS OR ¼ CLEAR SPAN. THE CLEAR SPAN IS PARALLEL TO LONG DIRECTION OF HEADWALL.

GENERAL NOTES:

FOR MEMBER THICKNESS AND FOR BAR SIZES, SPACING AND DIMENSIONS OF ALL REINFORCEMENT EXCEPT J5 BARS, SEE 703.87. FOR J5 BARS, SEE 703.37.

BARREL AND WINGS SECTIONS ARE SYMMETRICAL ABOUT AND NORMAL TO ℄ CULVERT. HEADWALL SECTIONS ARE NORMAL TO LONG DIRECTION OF HEADWALL.

DRAWING NOT TO SCALE. FOLLOW DIMENSIONS.

MINIMUM CLEARANCE TO REINFORCING STEEL SHALL BE 1½".

MISSOURI HIGHWAYS AND TRANSPORTATION COMMISSION
105 WEST CAPITOL
JEFFERSON CITY, MO 65102
1-888-ASK-MODOT (1-888-275-6636)

STATE OF MISSOURI
DENNIS W. HECKMAN
NUMBER PE-27141
PROFESSIONAL ENGINEER
THIS SHEET HAS BEEN SIGNED, SEALED AND DATED ELECTRONICALLY.

CONCRETE TRIPLE BOX CULVERT

SKEW: LEFT ADVANCE
WINGS: FLARED

SECTIONS

DATE EFFECTIVE:	12/01/2011	703.83H	SHEET NO. 3 OF 3
DATE PREPARED:	9/29/2011		

IF A SEAL IS PRESENT ON THIS SHEET IT HAS BEEN ELECTRONICALLY SEALED AND DATED.

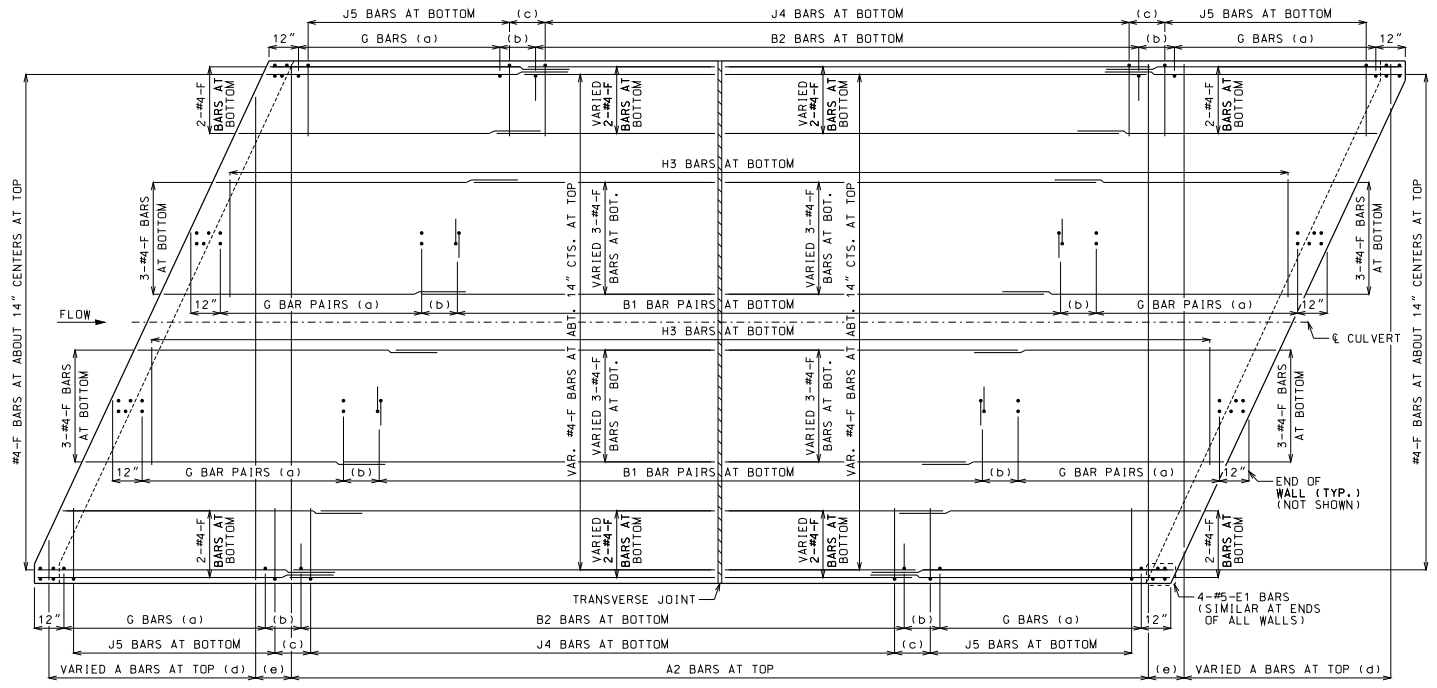

PLAN OF BOTTOM SLAB

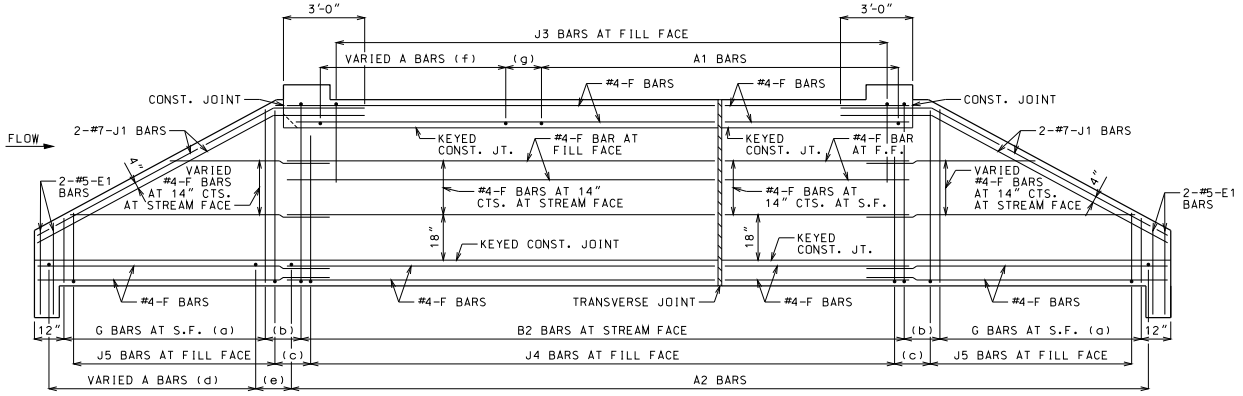

ELEVATION OF EXTERIOR WALL

J1 BARS MAY BE BENT IN FIELD OR SHOP.

LAYING OUT TRANVERSE JOINTS

UNLESS SHOWN ON BRIDGE PLANS

USE A TRANSVERSE JOINT WHEN BARREL LENGTH IS OVER 80 FEET. USE ADDITIONAL JOINTS TO LIMIT CUT SECTION LENGTH AND END SECTION BARREL LENGTH MEASURED ALONG CENTERLINE OF CULVERT TO 50 FEET.

MINIMUM END SECTION LENGTH SHALL BE 3 FEET MEASURED ALONG THE SHORTEST WALL FROM THE INSIDE FACE OF HEADWALL TO THE TRANSVERSE JOINT.

TO AVOID LOCATING TRANSVERSE JOINTS UNDER A TRAVELED WAY WITH DESIGN FILLS 2 FEET OR LESS THE FOLLOWING SHALL APPLY:

BARREL LENGTH UP TO 90 FEET WITHOUT A TRANSVERSE JOINT

CUT SECTION LENGTHS UP TO 60 FEET

WHEN BARREL AND CUT SECTION LENGTH RESTRICTIONS REQUIRE TRANSVERSE JOINTS TO BE LOCATED UNDER A TRAVELED WAY WITH DESIGN FILLS 2 FEET OR LESS, THE JOINTS SHALL BE LOCATED TO MINIMIZE THE LENGTH OF JOINT UNDER THE TRAVELED WAY.

TRAVELED WAY IS THE ROADWAY WIDTH MINUS SHOULDER WIDTHS.

FOR CUT SECTION DETAILS, SEE 703.86.

GENERAL NOTES:

FOR SECTIONS THRU BARREL, WINGS AND HEADWALLS, SEE SHEET 3 OF 3. FOR BAR SIZES, SPACING AND DIMENSIONS OF ALL REINFORCEMENT EXCEPT J5 BARS, SEE 703.87. FOR J5 BARS, SEE 703.37.

CONSTRUCTION JOINT KEY NOT SHOWN FOR CLARITY IN PLAN AND ELEVATION, SEE SHEET 3 OF 3 FOR DETAILS.

DRAWING NOT TO SCALE. FOLLOW DIMENSIONS.

MINIMUM CLEARANCE TO REINFORCING STEEL SHALL BE 1½".

LAP LONGITUDINAL BARS A MINIMUM OF 23" AT SPLICES.

BEVELED HEADWALL SHALL BE LOCATED AT UPSTREAM END.

(a) SAME SIZE AND SPACING AS ADJACENT B BARS

(b) VARIES, 12" MAXIMUM

(c) J4 BAR SPACING

(d) SAME SIZE AND SPACING AS A2 BARS

(e) A2 BAR SPACING

(f) SAME SIZE AND SPACING AS A1 BARS

(g) A1 BAR SPACING

MISSOURI HIGHWAYS AND TRANSPORTATION COMMISSION
105 WEST CAPITOL
JEFFERSON CITY, MO 65102
1-888-ASK-MODOT (1-888-275-6636)

STATE OF MISSOURI
DENNIS W. HECKMAN
NUMBER PE-27141
PROFESSIONAL ENGINEER
THIS SHEET HAS BEEN SIGNED, SEALED AND DATED ELECTRONICALLY.

CONCRETE TRIPLE BOX CULVERT

SKEW: RIGHT ADVANCE
WINGS: STRAIGHT

REINFORCEMENT

DATE EFFECTIVE:	12/01/2011	703.84H	SHEET NO. 1 OF 3
DATE PREPARED:	9/29/2011		

IF A SEAL IS PRESENT ON THIS SHEET IT HAS BEEN ELECTRONICALLY SEALED AND DATED.

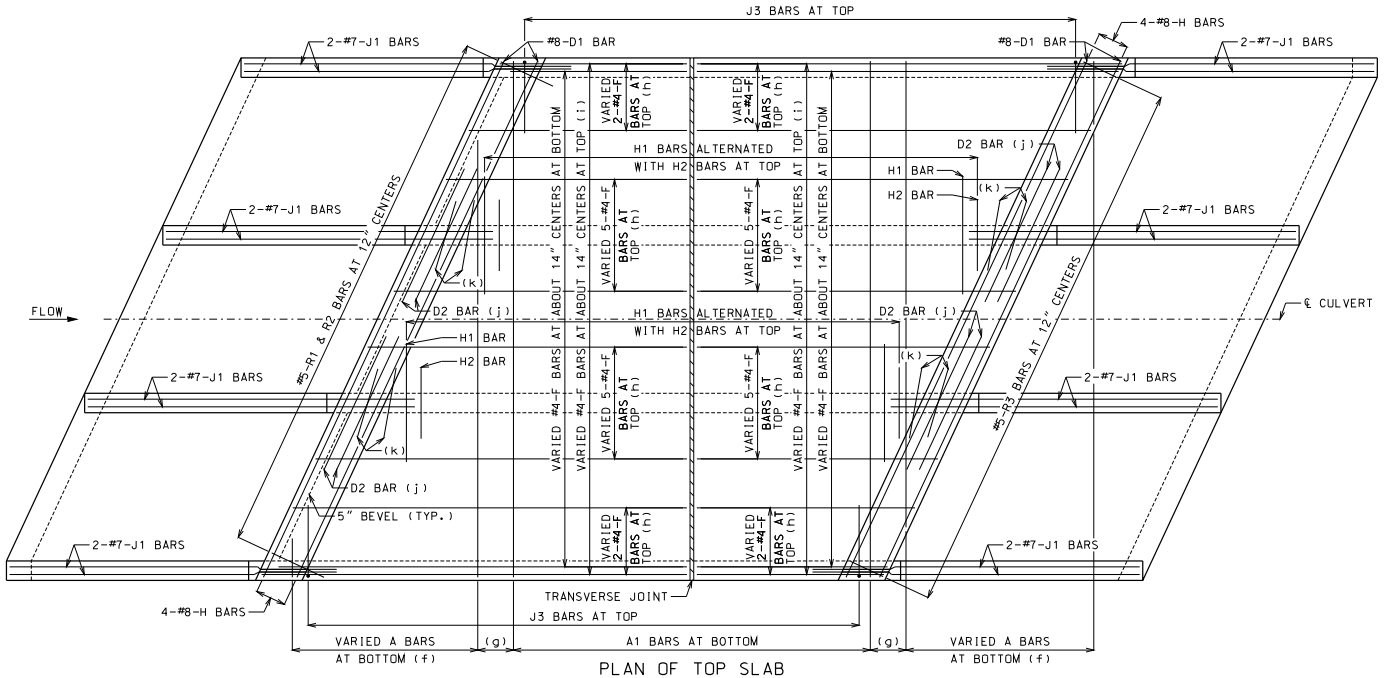

PLAN OF TOP SLAB

B BARS IN WALLS ARE NOT SHOWN FOR CLARITY.
FOR PLACEMENT, SEE SHEET 1 OF 3.

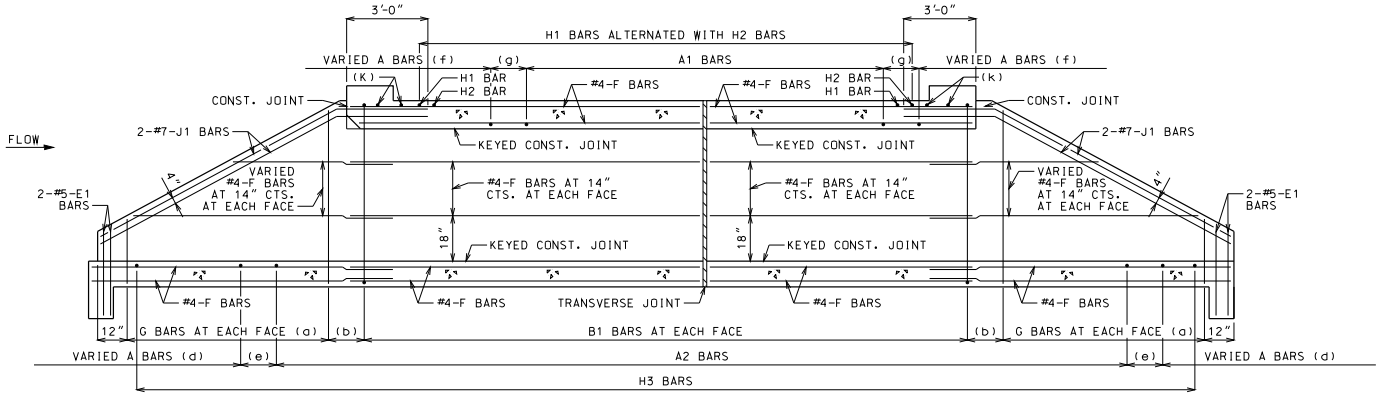

SECTION NEAR INTERIOR WALL

J1 BARS MAY BE BENT IN FIELD OR SHOP.

GENERAL NOTES:

FOR SECTIONS THRU BARREL, WINGS AND HEADWALLS, SEE SHEET 3 OF 3. FOR BAR SIZES, SPACING AND DIMENSIONS OF ALL REINFORCEMENT EXCEPT J5 BARS, SEE 703.87. FOR J5 BARS, SEE 703.37.

CONSTRUCTION JOINT KEY NOT SHOWN FOR CLARITY IN PLAN AND SECTION, SEE SHEET 3 OF 3 FOR DETAILS.

DRAWING NOT TO SCALE. FOLLOW DIMENSIONS.

MINIMUM CLEARANCE TO REINFORCING STEEL SHALL BE 1½".

LAP LONGITUDINAL BARS A MINIMUM OF 23" AT SPLICES.

BEVELED HEADWALL SHALL BE LOCATED AT UPSTREAM END.

(a) SAME SIZE AND SPACING AS ADJACENT B BARS

(b) VARIES, 12" MAXIMUM

(c) NOT SPECIFIED ON THIS SHEET

(d) SAME SIZE AND SPACING AS A2 BARS

(e) A2 BAR SPACING

(f) SAME SIZE AND SPACING AS A1 BARS

(g) A1 BAR SPACING

(h) FOR DESIGN FILLS OVER 2'-0"

(i) FOR DESIGN FILLS 2'-0" OR LESS

(j) NOT REQUIRED FOR CLEAR SPANS ≤ 10'-0"
#8 FOR CLEAR SPAN > 10'-0"
#9 FOR CLEAR SPAN > 13'-0"

IF REQUIRED, THE MINIMUM LENGTH EACH SIDE OF ℄ WALL SHALL BE THE GREATER OF 48 BAR DIAMETERS OR ¼ CLEAR SPAN. THE CLEAR SPAN IS PARALLEL TO LONG DIRECTION OF HEADWALL.

(k) H2 BARS AS REQUIRED, QUANTITY OF BARS VARIES WITH SKEW.

MISSOURI HIGHWAYS AND TRANSPORTATION COMMISSION
105 WEST CAPITOL
JEFFERSON CITY, MO 65102
1-888-ASK-MODOT (1-888-275-6636)

STATE OF MISSOURI
DENNIS W. HECKMAN
NUMBER PE-27141
PROFESSIONAL ENGINEER
THIS SHEET HAS BEEN SIGNED, SEALED AND DATED ELECTRONICALLY.

CONCRETE TRIPLE BOX CULVERT

SKEW: RIGHT ADVANCE
WINGS: STRAIGHT

REINFORCEMENT

DATE EFFECTIVE: 12/01/2011
DATE PREPARED: 9/29/2011

703.84H

SHEET NO. 2 OF 3

IF A SEAL IS PRESENT ON THIS SHEET IT HAS BEEN ELECTRONICALLY SEALED AND DATED.

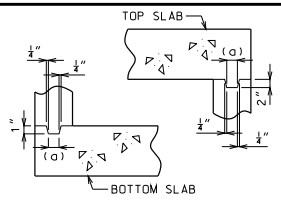

KEYED CONSTRUCTION JOINT

(a) APPROXIMATELY ONE-THIRD OF WALL THICKNESS

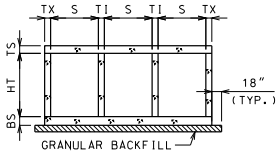

GRANULAR BACKFILL LIMITS AND MEMBER DIMENSIONS

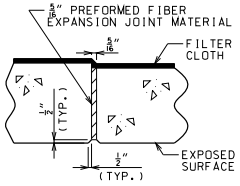

TRANSVERSE JOINT THRU BARREL

PREFORMED FIBER EXPANSION JOINT MATERIAL SHALL BE SECURELY STITCHED TO ONE FACE OF THE CONCRETE WITH NO. 10 GAGE COPPER WIRE OR NO. 12 GAGE SOFT DRAWN GALVANIZED STEEL WIRE.

FILTER CLOTH 3 FEET IN WIDTH AND DOUBLE THICKNESS SHALL BE CENTERED ON TRANSVERSE JOINTS IN TOP SLAB AND SIDEWALLS WITH EDGES SEALED WITH MASTIC OR TWO SIDED TAPE. FILTER CLOTH SHALL BE A SUBSURFACE DRAINAGE GEOTEXTILE IN ACCORDANCE WITH SECTION 1011 OF THE STANDARD SPECIFICATIONS FOR HIGHWAY CONSTRUCTION. COST OF FURNISHING AND INSTALLING FILTER CLOTH WILL BE CONSIDERED COMPLETELY COVERED BY THE CONTRACT UNIT PRICE FOR OTHER ITEMS.

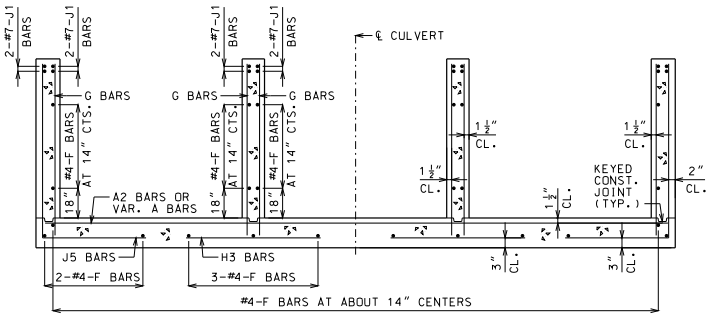

UPSTREAM AND DOWNSTREAM WINGS REINFORCEMENT

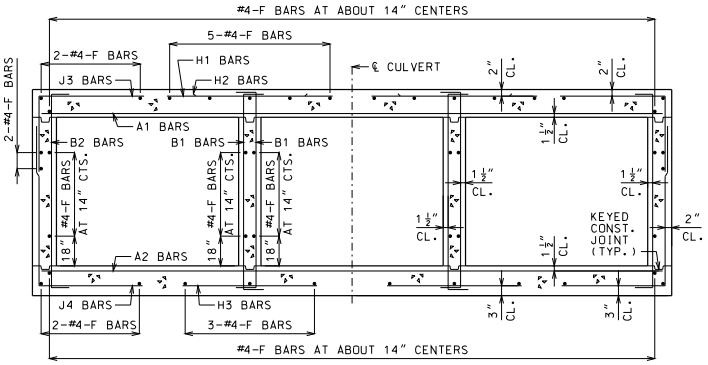

BARREL REINFORCEMENT

FOR DESIGN FILLS OVER 2'-0"

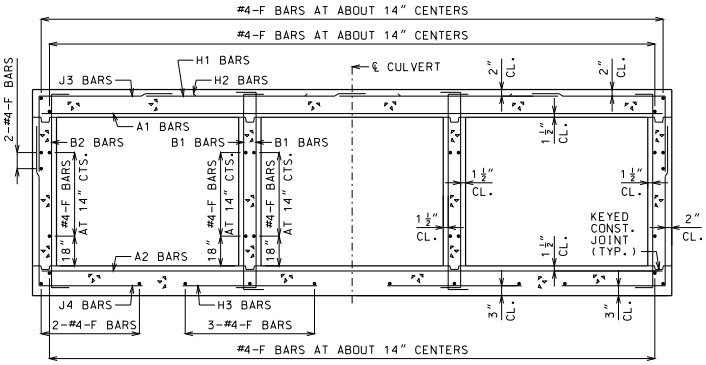

BARREL REINFORCEMENT

FOR DESIGN FILLS 2'-0" OR LESS

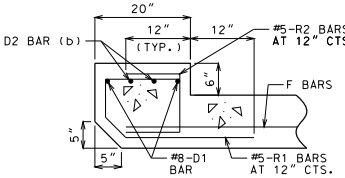

UPSTREAM HEADWALL REINFORCEMENT

NEAR INTERIOR WALL

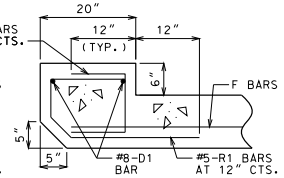

UPSTREAM HEADWALL REINFORCEMENT

NEAR MIDSPAN

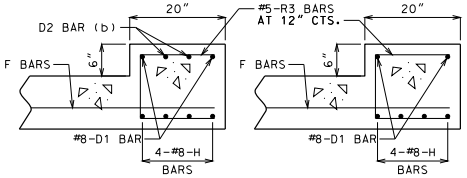

DOWNSTREAM HEADWALL REINFORCEMENT

NEAR INTERIOR WALL

DOWNSTREAM HEADWALL REINFORCEMENT

NEAR MIDSPAN

(b) NOT REQUIRED FOR CLEAR SPANS ≤ 10'-0"
#8 FOR CLEAR SPAN > 10'-0"
#9 FOR CLEAR SPAN > 13'-0"

IF D2 BARS ARE REQUIRED, THE MINIMUM LENGTH EACH SIDE OF ℄ WALL SHALL BE THE GREATER OF 48 BAR DIAMETERS OR ¼ CLEAR SPAN. THE CLEAR SPAN IS PARALLEL TO LONG DIRECTION OF HEADWALL.

GENERAL NOTES:

FOR MEMBER THICKNESS AND FOR BAR SIZES, SPACING AND DIMENSIONS OF ALL REINFORCEMENT EXCEPT J5 BARS, SEE 703.87. FOR J5 BARS, SEE 703.37.

BARREL AND WINGS SECTIONS ARE SYMMETRICAL ABOUT AND NORMAL TO ℄ CULVERT. HEADWALL SECTIONS ARE NORMAL TO LONG DIRECTION OF HEADWALL.

DRAWING NOT TO SCALE. FOLLOW DIMENSIONS.

MINIMUM CLEARANCE TO REINFORCING STEEL SHALL BE 1½".

MISSOURI HIGHWAYS AND TRANSPORTATION COMMISSION
105 WEST CAPITOL
JEFFERSON CITY, MO 65102
1-888-ASK-MODOT (1-888-275-6636)

STATE OF MISSOURI
DENNIS W. HECKMAN
NUMBER PE-27141
PROFESSIONAL ENGINEER
THIS SHEET HAS BEEN SIGNED, SEALED AND DATED ELECTRONICALLY.

CONCRETE TRIPLE BOX CULVERT

SKEW: RIGHT ADVANCE
WINGS: STRAIGHT

SECTIONS

DATE EFFECTIVE:	12/01/2011	703.84H	SHEET NO. 3 OF 3
DATE PREPARED:	9/29/2011		

IF A SEAL IS PRESENT ON THIS SHEET IT HAS BEEN ELECTRONICALLY SEALED AND DATED.

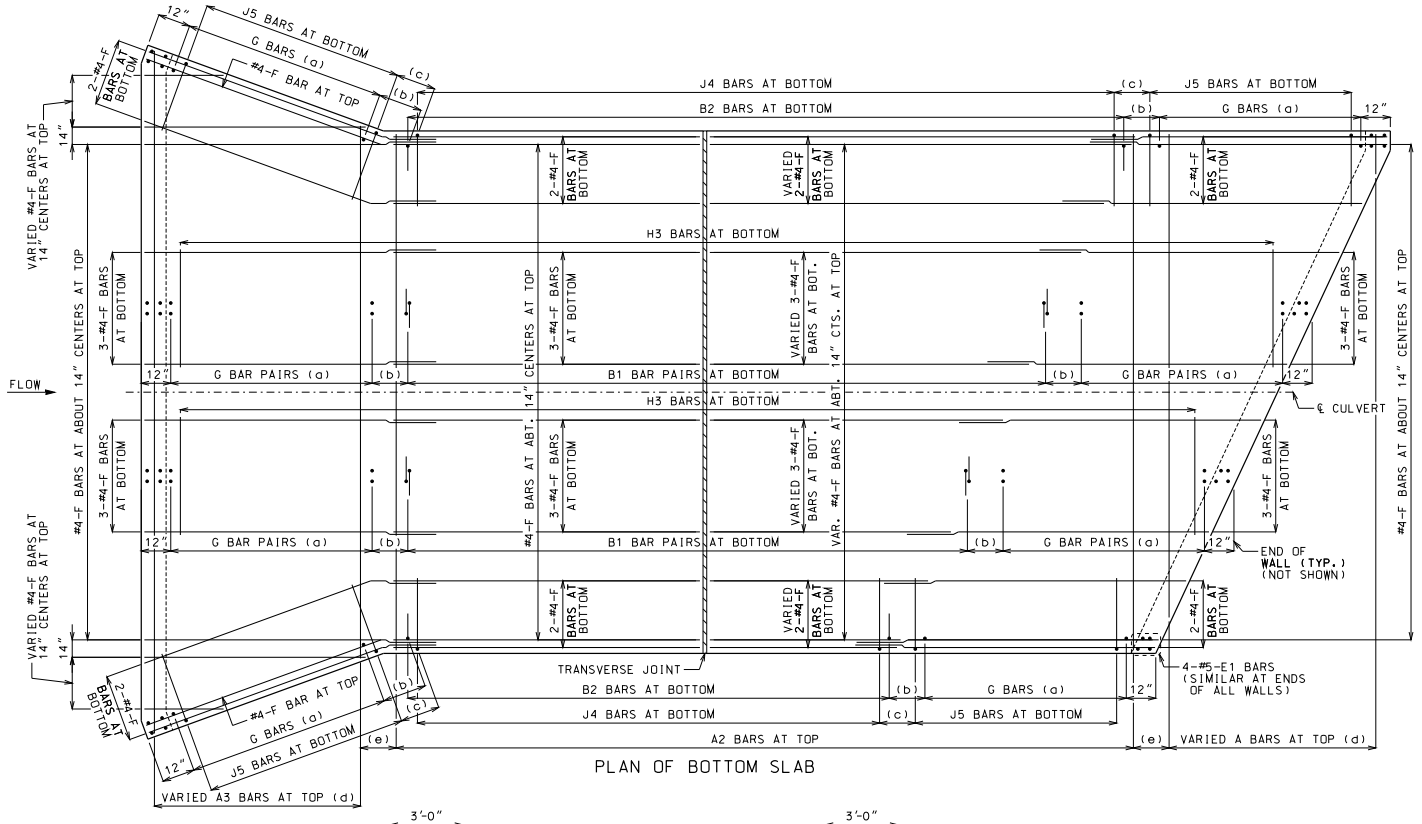

PLAN OF BOTTOM SLAB

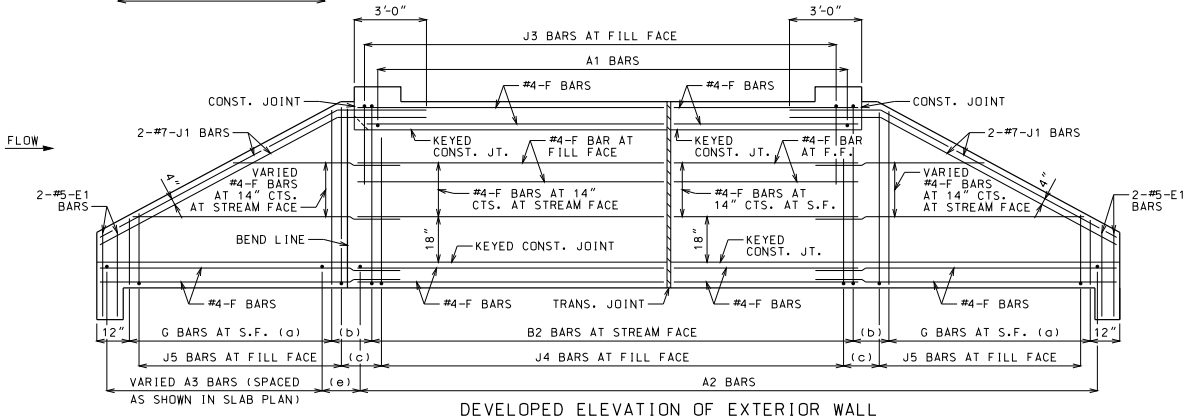

DEVELOPED ELEVATION OF EXTERIOR WALL

J1 BARS MAY BE BENT IN FIELD OR SHOP.

LAYING OUT TRANVERSE JOINTS

UNLESS SHOWN ON BRIDGE PLANS

USE A TRANSVERSE JOINT WHEN BARREL LENGTH IS OVER 80 FEET. USE ADDITIONAL JOINTS TO LIMIT CUT SECTION LENGTH AND END SECTION BARREL LENGTH MEASURED ALONG CENTERLINE OF CULVERT TO 50 FEET.

MINIMUM END SECTION LENGTH SHALL BE 3 FEET MEASURED ALONG THE SHORTEST WALL FROM THE INSIDE FACE OF HEADWALL TO THE TRANSVERSE JOINT.

TO AVOID LOCATING TRANSVERSE JOINTS UNDER A TRAVELED WAY WITH DESIGN FILLS 2 FEET OR LESS THE FOLLOWING SHALL APPLY:

BARREL LENGTH UP TO 90 FEET WITHOUT A TRANSVERSE JOINT

CUT SECTION LENGTHS UP TO 60 FEET

WHEN BARREL AND CUT SECTION LENGTH RESTRICTIONS REQUIRE TRANSVERSE JOINTS TO BE LOCATED UNDER A TRAVELED WAY WITH DESIGN FILLS 2 FEET OR LESS, THE JOINTS SHALL BE LOCATED TO MINIMIZE THE LENGTH OF JOINT UNDER THE TRAVELED WAY.

TRAVELED WAY IS THE ROADWAY WIDTH MINUS SHOULDER WIDTHS.

FOR CUT SECTION DETAILS, SEE 703.86.

GENERAL NOTES:

FOR SECTIONS THRU BARREL, WINGS AND HEADWALLS, SEE SHEET 3 OF 3. FOR BAR SIZES, SPACING AND DIMENSIONS OF ALL REINFORCEMENT EXCEPT J5 BARS, SEE 703.87. FOR J5 BARS, SEE 703.37.

CONSTRUCTION JOINT KEY NOT SHOWN FOR CLARITY IN PLAN AND ELEVATION, SEE SHEET 3 OF 3 FOR DETAILS.

DRAWING NOT TO SCALE. FOLLOW DIMENSIONS.

MINIMUM CLEARANCE TO REINFORCING STEEL SHALL BE 1½".

LAP LONGITUDINAL BARS A MINIMUM OF 23" AT SPLICES.

BEVELED HEADWALL SHALL BE LOCATED AT UPSTREAM END.

(a) SAME SIZE AND SPACING AS ADJACENT B BARS

(b) VARIES, 12" MAXIMUM

(c) J4 BAR SPACING

(d) SAME SIZE AND SPACING AS A2 BARS

(e) A2 BAR SPACING

MISSOURI HIGHWAYS AND TRANSPORTATION COMMISSION
105 WEST CAPITOL
JEFFERSON CITY, MO 65102
1-888-ASK-MODOT (1-888-275-6636)

STATE OF MISSOURI
DENNIS W. HECKMANN
NUMBER PE-27141
PROFESSIONAL ENGINEER
THIS SHEET HAS BEEN SIGNED, SEALED AND DATED ELECTRONICALLY.

CONCRETE TRIPLE BOX CULVERT

SKEW: RIGHT ADVANCE
WINGS: FLARED

REINFORCEMENT

DATE EFFECTIVE:	12/01/2011	703.85C	SHEET NO. 1 OF 3
DATE PREPARED:	9/29/2011		

IF A SEAL IS PRESENT ON THIS SHEET IT HAS BEEN ELECTRONICALLY SEALED AND DATED.

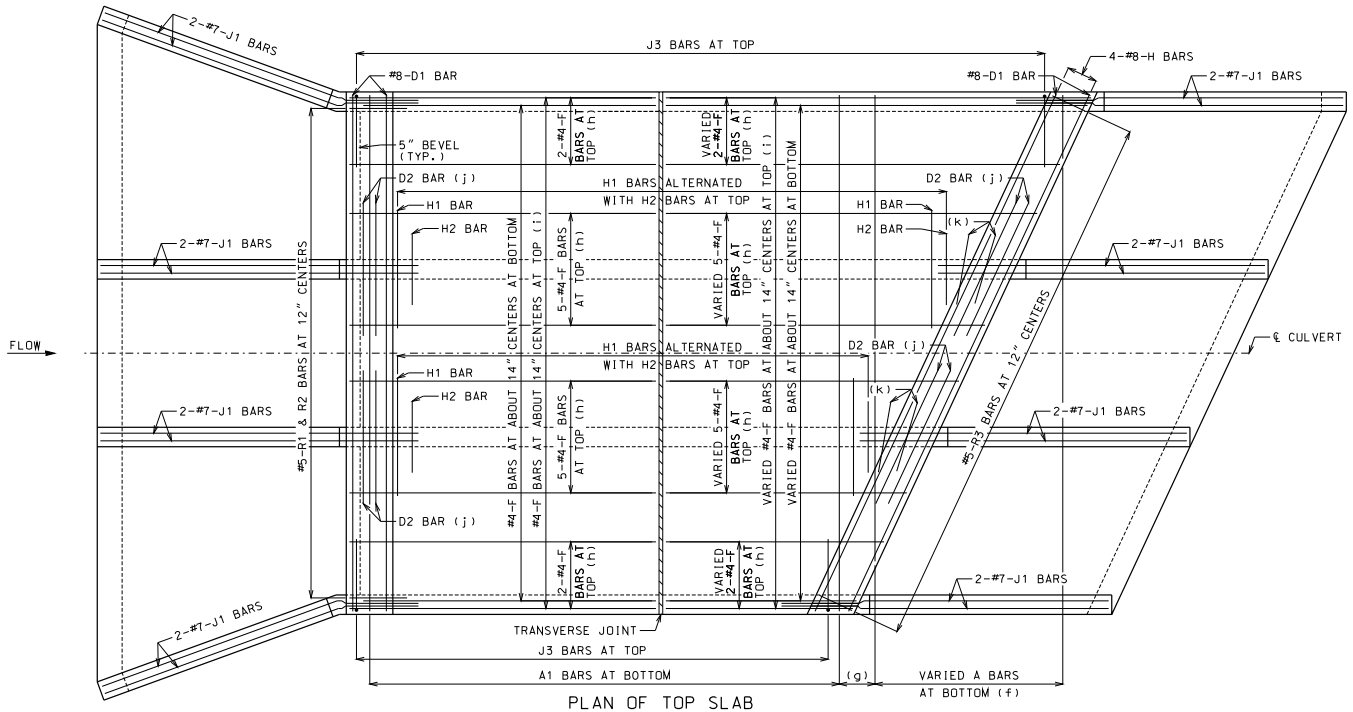

PLAN OF TOP SLAB

B BARS IN WALLS ARE NOT SHOWN FOR CLARITY.
FOR PLACEMENT, SEE SHEET 1 OF 3.

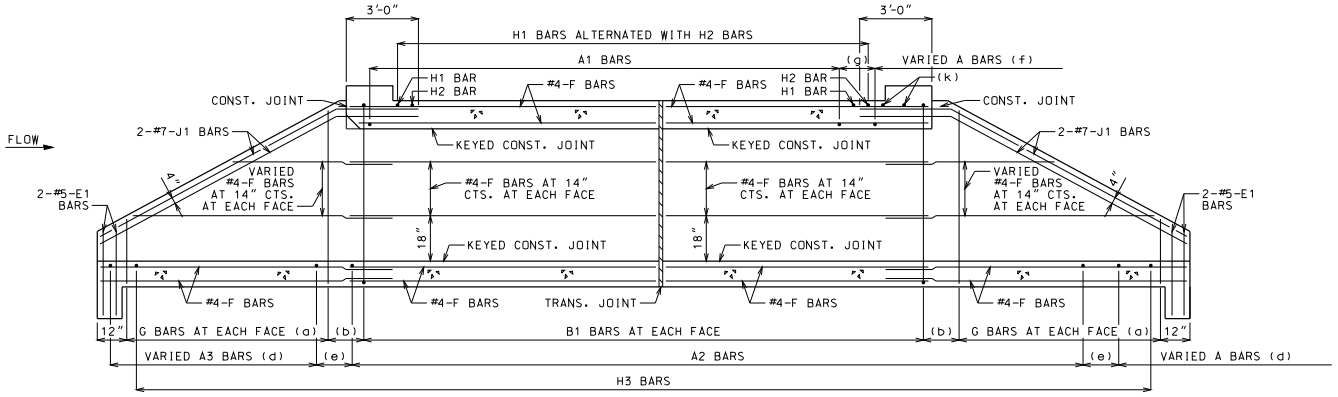

SECTION NEAR INTERIOR WALL

J1 BARS MAY BE BENT IN FIELD OR SHOP.

GENERAL NOTES:

FOR SECTIONS THRU BARREL, WINGS AND HEADWALLS, SEE SHEET 3 OF 3. FOR BAR SIZES, SPACING AND DIMENSIONS OF ALL REINFORCEMENT EXCEPT J5 BARS, SEE 703.87. FOR J5 BARS, SEE 703.37.

CONSTRUCTION JOINT KEY NOT SHOWN FOR CLARITY IN PLAN AND SECTION, SEE SHEET 3 OF 3 FOR DETAILS.

DRAWING NOT TO SCALE. FOLLOW DIMENSIONS.

MINIMUM CLEARANCE TO REINFORCING STEEL SHALL BE 1½".

LAP LONGITUDINAL BARS A MINIMUM OF 23" AT SPLICES.

BEVELED HEADWALL SHALL BE LOCATED AT UPSTREAM END.

(a) SAME SIZE AND SPACING AS ADJACENT B BARS

(b) VARIES, 12" MAXIMUM

(c) NOT SPECIFIED ON THIS SHEET

(d) SAME SIZE AND SPACING AS A2 BARS

(e) A2 BAR SPACING

(f) SAME SIZE AND SPACING AS A1 BARS

(g) A1 BAR SPACING

(h) FOR DESIGN FILLS OVER 2'-0"

(i) FOR DESIGN FILLS 2'-0" OR LESS

(j) NOT REQUIRED FOR CLEAR SPANS ≤ 10'-0"
#8 FOR CLEAR SPAN > 10'-0"
#9 FOR CLEAR SPAN > 13'-0"

IF REQUIRED, THE MINIMUM LENGTH EACH SIDE OF ℄ WALL SHALL BE THE GREATER OF 48 BAR DIAMETERS OR ¼ CLEAR SPAN. THE CLEAR SPAN IS PARALLEL TO LONG DIRECTION OF HEADWALL.

(k) H2 BARS AS REQUIRED, QUANTITY OF BARS VARIES WITH SKEW.

IF A SEAL IS PRESENT ON THIS SHEET IT HAS BEEN ELECTRONICALLY SEALED AND DATED.

MISSOURI HIGHWAYS AND TRANSPORTATION COMMISSION
105 WEST CAPITOL
JEFFERSON CITY, MO 65102
1-888-ASK-MODOT (1-888-275-6636)

STATE OF MISSOURI
DENNIS W. HECKMANN
NUMBER PE-27141
PROFESSIONAL ENGINEER
THIS SHEET HAS BEEN SIGNED, SEALED AND DATED ELECTRONICALLY.

CONCRETE TRIPLE BOX CULVERT

SKEW: RIGHT ADVANCE
WINGS: FLARED

REINFORCEMENT

DATE EFFECTIVE:	12/01/2011	703.85C	SHEET NO. 2 OF 3
DATE PREPARED:	9/29/2011		

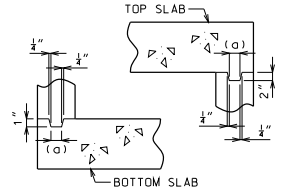

KEYED CONSTRUCTION JOINT

(a) APPROXIMATELY ONE-THIRD OF WALL THICKNESS

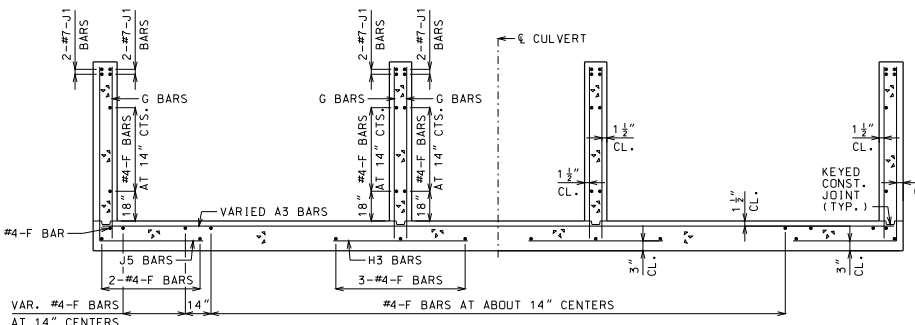

UPSTREAM FLARED WINGS REINFORCEMENT

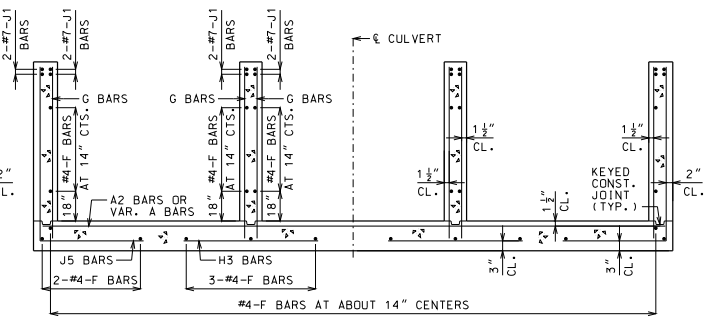

DOWNSTREAM WINGS REINFORCEMENT

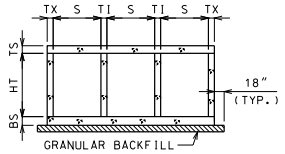

GRANULAR BACKFILL LIMITS AND MEMBER DIMENSIONS

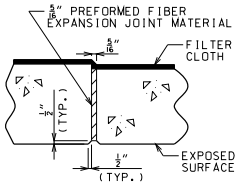

TRANSVERSE JOINT THRU BARREL

PREFORMED FIBER EXPANSION JOINT MATERIAL SHALL BE SECURELY STITCHED TO ONE FACE OF THE CONCRETE WITH NO. 10 GAGE COPPER WIRE OR NO. 12 GAGE SOFT DRAWN GALVANIZED STEEL WIRE.

FILTER CLOTH 3 FEET IN WIDTH AND DOUBLE THICKNESS SHALL BE CENTERED ON TRANSVERSE JOINTS IN TOP SLAB AND SIDEWALLS WITH EDGES SEALED WITH MASTIC OR TWO SIDED TAPE. FILTER CLOTH SHALL BE A SUBSURFACE DRAINAGE GEOTEXTILE IN ACCORDANCE WITH SECTION 1011 OF THE STANDARD SPECIFICATIONS FOR HIGHWAY CONSTRUCTION. COST OF FURNISHING AND INSTALLING FILTER CLOTH WILL BE CONSIDERED COMPLETELY COVERED BY THE CONTRACT UNIT PRICE FOR OTHER ITEMS.

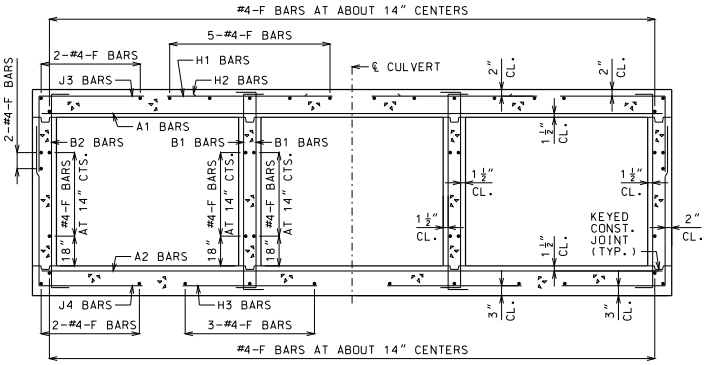

BARREL REINFORCEMENT

FOR DESIGN FILLS OVER 2'-0"

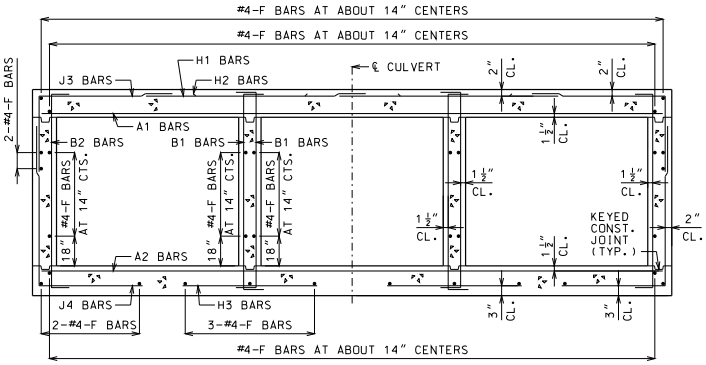

BARREL REINFORCEMENT

FOR DESIGN FILLS 2'-0" OR LESS

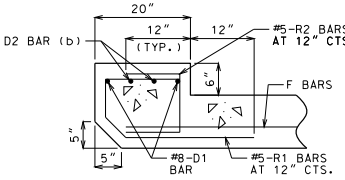

UPSTREAM HEADWALL REINFORCEMENT

NEAR INTERIOR WALL

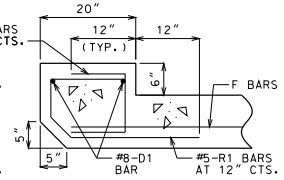

UPSTREAM HEADWALL REINFORCEMENT

NEAR MIDSPAN

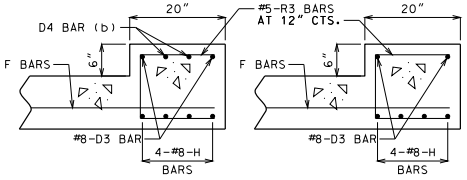

DOWNSTREAM HEADWALL REINFORCEMENT

NEAR INTERIOR WALL

DOWNSTREAM HEADWALL REINFORCEMENT

NEAR MIDSPAN

(b) NOT REQUIRED FOR CLEAR SPANS ≤ 10'-0"
#8 FOR CLEAR SPAN > 10'-0"
#9 FOR CLEAR SPAN > 13'-0"

IF D2 AND D4 BARS ARE REQUIRED, THE MINIMUM LENGTH EACH SIDE OF ℄ WALL SHALL BE THE GREATER OF 48 BAR DIAMETERS OR ¼ CLEAR SPAN. THE CLEAR SPAN IS PARALLEL TO LONG DIRECTION OF HEADWALL.

GENERAL NOTES:

FOR MEMBER THICKNESS AND FOR BAR SIZES, SPACING AND DIMENSIONS OF ALL REINFORCEMENT EXCEPT J5 BARS, SEE 703.87. FOR J5 BARS, SEE 703.37.

BARREL AND WINGS SECTIONS ARE SYMMETRICAL ABOUT AND NORMAL TO ℄ CULVERT. HEADWALL SECTIONS ARE NORMAL TO LONG DIRECTION OF HEADWALL.

DRAWING NOT TO SCALE. FOLLOW DIMENSIONS.

MINIMUM CLEARANCE TO REINFORCING STEEL SHALL BE 1½".

MISSOURI HIGHWAYS AND TRANSPORTATION COMMISSION
105 WEST CAPITOL
JEFFERSON CITY, MO 65102
1-888-ASK-MODOT (1-888-275-6636)

STATE OF MISSOURI
DENNIS W. HECKMAN
NUMBER PE-27141
PROFESSIONAL ENGINEER
THIS SHEET HAS BEEN SIGNED, SEALED AND DATED ELECTRONICALLY.

CONCRETE TRIPLE BOX CULVERT

SKEW: RIGHT ADVANCE
WINGS: FLARED

SECTIONS

DATE EFFECTIVE:	12/01/2011	703.85C	SHEET NO. 3 OF 3
DATE PREPARED:	9/29/2011		

IF A SEAL IS PRESENT ON THIS SHEET IT HAS BEEN ELECTRONICALLY SEALED AND DATED.

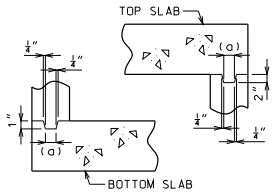

KEYED CONSTRUCTION JOINT

(a) APPROXIMATELY ONE-THIRD OF WALL THICKNESS

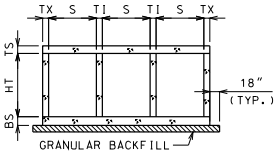

GRANULAR BACKFILL LIMITS AND MEMBER DIMENSIONS

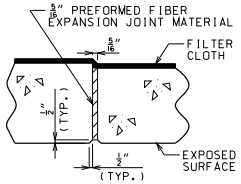

TRANSVERSE JOINT THRU BARREL

PREFORMED FIBER EXPANSION JOINT MATERIAL SHALL BE SECURELY STITCHED TO ONE FACE OF THE CONCRETE WITH NO. 10 GAGE COPPER WIRE OR NO. 12 GAGE SOFT DRAWN GALVANIZED STEEL WIRE.

FILTER CLOTH 3 FEET IN WIDTH AND DOUBLE THICKNESS SHALL BE CENTERED ON TRANSVERSE JOINTS IN TOP SLAB AND SIDEWALLS WITH EDGES SEALED WITH MASTIC OR TWO SIDED TAPE. FILTER CLOTH SHALL BE A SUBSURFACE DRAINAGE GEOTEXTILE IN ACCORDANCE WITH SECTION 1011 OF THE STANDARD SPECIFICATIONS FOR HIGHWAY CONSTRUCTION. COST OF FURNISHING AND INSTALLING FILTER CLOTH WILL BE CONSIDERED COMPLETELY COVERED BY THE CONTRACT UNIT PRICE FOR OTHER ITEMS.

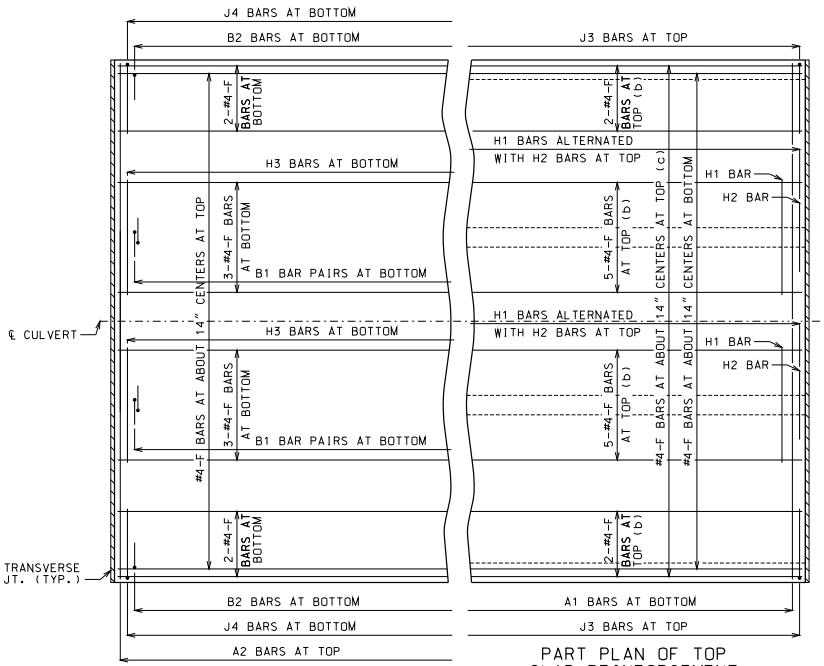

PART PLAN OF BOTTOM SLAB REINFORCEMENT

PART PLAN OF TOP SLAB REINFORCEMENT

(b) FOR DESIGN FILLS OVER 2'-0"
(c) FOR DESIGN FILLS 2'-0" OR LESS

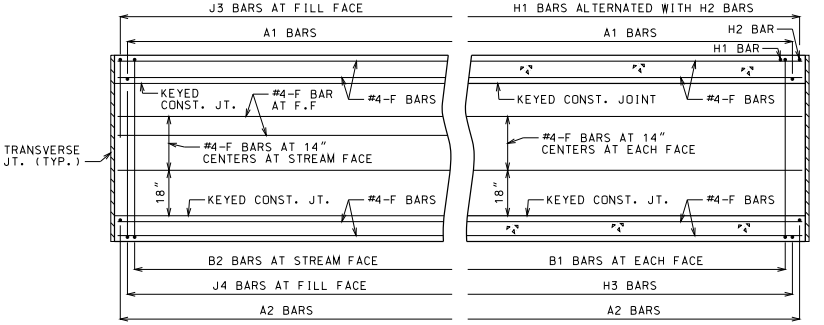

PART ELEVATION OF EXTERIOR WALL REINFORCEMENT

PART SECTION NEAR INTERIOR WALL REINFORCEMENT

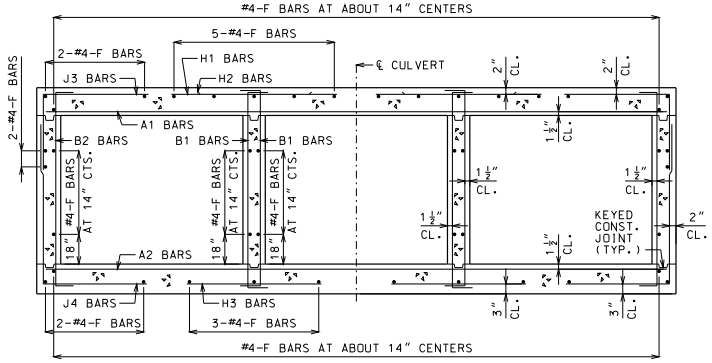

BARREL REINFORCEMENT

FOR DESIGN FILLS OVER 2'-0"
SYMMETRICAL ABOUT AND NORMAL TO ℄ CULVERT.

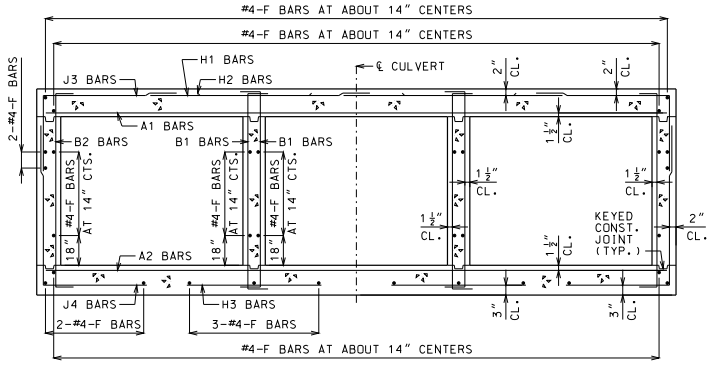

BARREL REINFORCEMENT

FOR DESIGN FILLS 2'-0" OR LESS
SYMMETRICAL ABOUT AND NORMAL TO ℄ CULVERT.

GENERAL NOTES

DESIGN SPECIFICATIONS: 2010 AASHTO LRFD BRIDGE DESIGN SPECFICATIONS AND 2010 INTERIM REVISIONS

DESIGN UNIT STRESSES: CLASS B-1 CONCRETE f'c = 4,000 PSI
REINFORCING STEEL (GRADE 60) fy = 60,000 PSI

DESIGN LOADS: VEHICULAR = HL-93 MINUS LANE LOAD
EARTH = 120 LB/FT³
EQUIVALENT FLUID PRESSURE = 30 LB/FT³ (MIN.) - 60 LB/FT³ (MAX.)

FOR MEMBER THICKNESS AND FOR BAR SIZES, SPACING AND DIMENSIONS, SEE 703.87.

CONSTRUCTION JOINT KEY NOT SHOWN FOR CLARITY IN PART PLANS, PART ELEVATION AND PART SECTION.

DRAWING NOT TO SCALE. FOLLOW DIMENSIONS.

MINIMUM CLEARANCE TO REINFORCING STEEL SHALL BE 1½".

IF A SEAL IS PRESENT ON THIS SHEET IT HAS BEEN ELECTRONICALLY SEALED AND DATED.

MISSOURI HIGHWAYS AND TRANSPORTATION COMMISSION
105 WEST CAPITOL
JEFFERSON CITY, MO 65102
1-888-ASK-MODOT (1-888-275-6636)

STATE OF MISSOURI
DENNIS W. HECKMAN
NUMBER PE-27141
PROFESSIONAL ENGINEER
THIS SHEET HAS BEEN SIGNED, SEALED AND DATED ELECTRONICALLY.

CONCRETE TRIPLE BOX CULVERT

CUT SECTION

DATE EFFECTIVE: 12/01/2011
DATE PREPARED: 9/29/2011

703.86

SHEET NO. 1 OF 1

SPAN (S) = 3 FT HEIGHT (HT) = 2 FT OR 3 FT OR 4 FT

DESIGN FILL	MEMBER THICKNESS				TOP SLAB BARS														BOTTOM SLAB BARS												WALL BARS				
					A1 BARS		J3 BARS					H1 BARS				H2 BARS				A2 BARS		J4 BARS					H3 BARS				B1 BARS		B2 BARS		
										K2													K3										
	TS	BS	TX	TI	SIZE	SPA.	SIZE	SPA.	C1	HT=2′	HT=3′	HT=4′	SIZE	SPA.	C5	Q8	SIZE	SPA.	C6	Q9	SIZE	SPA.	SIZE	SPA.	C4	HT=2′	HT=3′	HT=4′	SIZE	SPA.	C7	Q10	SIZE	SPA.	SIZE	SPA.	G1
1 FT	10	8	8	8	4	8.5	4	10.5	26.8	26.0	26.0	26.0	4	24	39.5	30.5	4	24	20.0	20.0	4	12	4	12	36.0	28	40	52	4	12	25.0	25.0	5	12	5	12	12
2 FT	10	8	8	8	4	8.5	4	10.5	26.8	26.0	26.0	26.0	4	24	39.5	30.5	4	24	20.0	20.0	4	12	4	12	35.0	28	40	52	4	12	24.0	24.0	5	12	5	12	12
4 FT	8	8	8	8	4	12	4	12	26.8	24.0	24.0	24.0	4	24	39.5	34.0	4	24	19.0	19.0	4	12	4	12	31.1	28	40	52	4	12	23.0	24.0	5	12	5	12	12
6 FT	8	8	8	8	4	12	4	12	31.1	24.0	24.0	24.0	4	24	26.0	26.0	4	24	18.0	18.0	4	12	4	12	28.9	28	40	52	4	12	22.0	23.0	5	12	5	12	12
8 FT	8	8	8	8	4	12	4	12	28.5	24.0	24.0	24.0	4	24	24.0	24.0	4	24	18.0	18.0	4	12	4	12	27.3	28	40	52	4	12	22.0	23.0	5	12	5	12	0
10 FT	8	8	8	8	4	12	4	12	27.1	24.0	24.0	24.0	4	24	23.0	24.0	4	24	18.0	18.0	4	12	4	12	26.5	28	40	52	4	12	22.0	23.0	5	12	5	12	0
12 FT	8	8	8	8	4	12	4	12	25.0	24.0	24.0	24.0	4	24	21.0	23.0	4	24	18.0	18.0	4	12	4	12	24.5	28	40	52	4	12	22.0	23.0	5	12	5	12	0
14 FT	8	8	8	8	4	12	4	12	24.9	24.0	24.0	24.0	4	24	21.0	23.0	4	24	18.0	18.0	4	12	4	12	24.5	28	40	52	4	12	22.0	23.0	5	12	5	12	0
16 FT	8	8	8	8	4	12	4	12	24.8	24.0	24.0	24.0	4	24	21.0	22.0	4	24	18.0	18.0	4	12	4	12	24.4	28	40	52	4	11.5	22.0	23.0	5	12	5	12	0
18 FT	8	8	8	8	4	12	4	12	24.8	24.0	24.0	24.0	4	24	21.0	22.0	4	24	18.0	18.0	4	12	4	12	24.4	28	40	52	4	11	22.0	23.0	5	12	5	12	0
20 FT	8	8	8	8	4	12	4	12	24.6	24.0	24.0	24.0	4	24	21.0	22.0	4	24	18.0	18.0	4	12	4	12	24.3	28	40	52	4	10.5	22.0	23.0	5	12	5	12	0
22 FT	8	8	8	8	4	12	4	12	24.6	24.0	24.0	24.0	4	24	21.0	22.0	4	24	18.0	18.0	4	12	4	12	24.3	28	40	52	4	9.5	22.0	23.0	5	12	5	12	0
24 FT	8	8	8	8	4	12	4	12	24.5	24.0	24.0	24.0	4	24	21.0	22.0	4	24	18.0	18.0	4	11.5	4	12	24.3	28	40	52	4	9	22.0	23.0	5	12	5	12	0
26 FT	8	8	8	8	4	12	4	12	24.5	24.0	24.0	24.0	4	24	21.0	22.0	4	24	18.0	18.0	4	10.5	4	11	24.1	28	40	52	4	9	22.0	23.0	5	12	5	12	0
28 FT	8	8	8	8	4	12	4	11	24.5	24.0	24.0	24.0	4	24	21.0	22.0	4	24	18.0	18.0	4	10	4	10	24.1	28	40	52	4	8.5	22.0	23.0	5	12	5	12	0
30 FT	8	8	8	8	4	11	4	10.5	24.5	24.0	24.0	24.0	4	24	21.0	22.0	4	24	18.0	18.0	4	9	4	9.5	24.1	28	40	52	4	8	22.0	23.0	5	12	5	12	0
32 FT	8	9	8	8	4	10.5	4	9.5	24.5	24.0	24.0	24.0	4	23	21.0	22.0	4	23	18.0	18.0	4	9.5	4	12	24.5	29	41	53	4	9.5	21.0	23.0	5	12	5	12	0
34 FT	8	9	8	8	4	10	4	9	24.5	24.0	24.0	24.0	4	22	21.0	22.0	4	22	18.0	18.0	4	9	4	11	24.4	29	41	53	4	9	21.0	23.0	5	12	5	12	0
36 FT	8	9	8	8	4	9.5	4	8.5	24.5	24.0	24.0	24.0	4	21	21.0	22.0	4	21	18.0	18.0	4	8.5	4	10.5	24.4	29	41	53	4	8.5	21.0	23.0	5	12	5	12	0
38 FT	8	9	8	8	4	9	4	8	24.5	24.0	24.0	24.0	4	20	21.0	22.0	4	20	18.0	18.0	4	8	4	10	24.4	29	41	53	4	8.5	21.0	23.0	5	12	5	12	0
40 FT	8	10	8	8	4	8.5	4	7.5	24.5	24.0	24.0	24.0	4	19	21.0	22.0	4	19	18.0	18.0	4	8.5	4	12	24.8	30	42	54	4	9	21.0	23.0	5	12	5	12	0
42 FT	9	10	8	8	4	9	4	9	24.8	25.0	25.0	25.0	4	21	21.0	23.0	4	21	17.0	18.0	4	8	4	11.5	24.8	30	42	54	4	9	21.0	23.0	5	12	5	12	0
44 FT	9	10	8	8	4	8.5	4	8.5	24.8	25.0	25.0	25.0	4	20	21.0	23.0	4	20	17.0	18.0	4	8	4	11	24.8	30	42	54	4	9	21.0	23.0	5	12	5	12	0
46 FT	9	10	8	8	4	8	4	8	24.8	25.0	25.0	25.0	4	19	21.0	23.0	4	19	17.0	18.0	4	7.5	4	10.5	24.8	30	42	54	4	8.5	21.0	23.0	5	12	5	12	0
48 FT	9	11	8	8	4	8	4	7.5	24.9	25.0	25.0	25.0	4	19	21.0	22.0	4	19	18.0	18.0	4	8	4	10.5	25.0	31	43	55	4	9.5	21.0	23.0	5	12	5	12	0
50 FT	10	11	8	8	4	8	4	8	25.1	26.0	26.0	26.0	4	20	21.0	23.0	4	20	17.0	18.0	4	7.5	4	10.5	25.1	31	43	55	4	9	21.0	23.0	5	12	5	12	0

SPAN (S) = 3 FT HEIGHT (HT) = 5 FT OR 6 FT

DESIGN FILL	MEMBER THICKNESS				TOP SLAB BARS															BOTTOM SLAB BARS													WALL BARS				
					A1 BARS		J3 BARS						H1 BARS				H2 BARS				A2 BARS		J4 BARS						H3 BARS					B1 BARS		B2 BARS		
										K2																K3											
	TS	BS	TX	TI	SIZE	SPA.	SIZE	SPA.	C1	HT=5′	HT=6′		SIZE	SPA.	C5	Q8	SIZE	SPA.	C6	Q9	SIZE	SPA.	SIZE	SPA.	C4	HT=5′	HT=6′		SIZE	SPA.	C7	Q10		SIZE	SPA.	SIZE	SPA.	G1
1 FT	10	8	8	8	4	8.5	4	10.5	26.8	26.0	26.0		4	24	39.5	30.5	4	24	21.0	20.0	4	12	4	11.5	36.0	64	76		4	12	34.0	25.0		5	12	5	12	12
2 FT	10	8	8	8	4	8.5	4	10.5	26.8	26.0	26.0		4	24	39.5	30.5	4	24	20.0	20.0	4	12	4	11	36.0	64	76		4	12	34.0	24.0		5	12	5	12	12
4 FT	8	8	8	8	4	12	4	12	26.8	24.0	24.0		4	24	39.5	34.0	4	24	19.0	19.0	4	12	4	10	36.0	64	76		4	12	34.0	24.0		5	12	5	12	12
6 FT	8	8	8	8	4	12	4	12	26.8	24.0	24.0		4	24	39.5	26.0	4	24	18.0	19.0	4	12	4	9.5	36.0	64	76		4	12	34.0	23.0		5	12	5	12	12
8 FT	8	8	8	8	4	12	4	12	26.8	24.0	24.0		4	24	39.5	24.0	4	24	18.0	18.0	4	12	4	9	36.0	64	76		4	12	24.0	23.0		5	12	5	12	0
10 FT	8	8	8	8	4	12	4	12	26.8	24.0	24.0		4	24	39.5	23.0	4	24	18.0	18.0	4	12	4	8.5	36.0	64	76		4	12	23.0	23.0		5	12	5	12	0
12 FT	8	8	8	8	4	12	4	12	34.9	24.0	24.0		4	24	22.0	22.0	4	24	17.0	18.0	4	12	4	9	34.4	64	76		4	12	22.0	23.0		5	12	5	12	0
14 FT	8	8	8	8	4	12	4	11	34.5	24.0	24.0		4	24	22.0	22.0	4	24	17.0	18.0	4	12	4	8.5	34.1	64	76		4	12	22.0	23.0		5	12	5	12	0
16 FT	8	8	8	8	4	12	4	10	34.3	24.0	24.0		4	24	22.0	22.0	4	24	17.0	18.0	4	12	4	8	33.9	64	76		4	12	22.0	23.0		5	12	5	12	0
18 FT	8	8	8	8	4	12	4	9	34.0	24.0	24.0		4	24	22.0	22.0	4	24	17.0	18.0	4	12	4	7.5	33.8	64	76		4	12	22.0	23.0		5	12	5	12	0
20 FT	8	8	8	8	4	12	4	8	33.8	24.0	24.0		4	24	22.0	22.0	4	24	17.0	18.0	4	12	4	7	33.6	64	76		4	11.5	22.0	23.0		5	12	5	12	0
22 FT	8	8	8	8	4	12	4	7.5	33.6	24.0	24.0		4	24	22.0	22.0	4	24	17.0	18.0	4	12	4	6.5	33.5	64	76		4	10.5	22.0	23.0		5	12	5	12	0
24 FT	8	8	8	8	4	12	4	7	33.5	24.0	24.0		4	24	22.0	22.0	4	24	17.0	18.0	4	11.5	4	6	33.4	64	76		4	10.5	22.0	23.0		5	12	5	12	0
26 FT	8	8	8	8	4	12	4	6.5	33.4	24.0	24.0		4	24	21.0	22.0	4	24	17.0	18.0	4	10.5	5	6.5	33.3	64	76		4	10	22.0	22.0		5	12	5	12	0
28 FT	8	8	8	8	4	12	4	6	33.3	24.0	24.0		4	24	21.0	22.0	4	24	17.0	18.0	4	10	5	6	33.1	64	76		4	9.5	22.0	22.0		5	12	5	12	0
30 FT	8	8	9	8	4	11.5	4	6.5	32.3	24.0	24.0		4	24	21.0	22.0	4	24	17.0	18.0	4	9.5	4	6	32.1	64	76		4	9	22.0	23.0		5	12	5	12	0
32 FT	8	9	9	8	4	11	4	6.5	32.1	24.0	24.0		4	24	21.0	22.0	4	24	17.0	18.0	4	10	4	6.5	34.1	65	77		4	10.5	22.0	23.0		5	12	5	12	0
34 FT	8	9	9	8	4	10	4	6	32.0	24.0	24.0		4	23	21.0	22.0	4	23	17.0	18.0	4	9.5	4	6	34.0	65	77		4	10	22.0	23.0		5	12	5	11.5	0
36 FT	8	9	9	8	4	9.5	5	7	32.0	24.0	24.0		4	22	21.0	22.0	4	22	17.0	18.0	4	9	4	6	34.0	65	77		4	10	22.0	23.0		5	12	5	11	0
38 FT	8	9	9	8	4	9	5	6.5	32.0	24.0	28.0		4	21	21.0	22.0	4	21	17.0	18.0	4	8.5	5	7	34.0	65	77		4	9.5	22.0	23.0		5	12	5	10	0
40 FT	8	10	9	8	4	8.5	5	6	31.9	24.0	24.0		4	20	21.0	22.0	4	20	17.0	18.0	4	9	4	6	35.5	66	78		4	10.5	23.0	23.0		5	12	5	10	0
42 FT	9	10	9	8	4	9.5	5	6.5	33.4	25.0	29.0		4	22	21.0	22.0	4	22	17.0	18.0	4	9	5	7	35.3	66	78		4	10	23.0	23.0		5	12	5	9.5	0
44 FT	9	10	9	8	4	9	5	6.5	33.3	25.0	29.0		4	21	21.0	22.0	4	21	17.0	18.0	4	8.5	5	6.5	35.3	66	78		4	10	23.0	23.0		5	12	5	9	0
46 FT	9	10	9	8	4	8.5	5	6	33.3	25.0	29.0		4	21	21.0	22.0	4	21	17.0	18.0	4	8	5	6.5	35.1	66	78		4	9.5	23.0	23.0		5	12	5	8.5	0
48 FT	9	11	9	8	4	8	5	6	33.1	25.0	29.0		4	20	21.0	22.0	4	20	17.0	18.0	4	8.5	5	6.5	36.4	67	79		4	10	23.0	23.0		5	12	5	8.5	0
50 FT	9	11	9	8	4	7.5	5	6	33.1	25.0	29.0		4	19	21.0	22.0	4	19	17.0	18.0	4	8.5	5	6.5	36.4	67	79		4	10	23.0	23.0		5	12	5	8.5	0

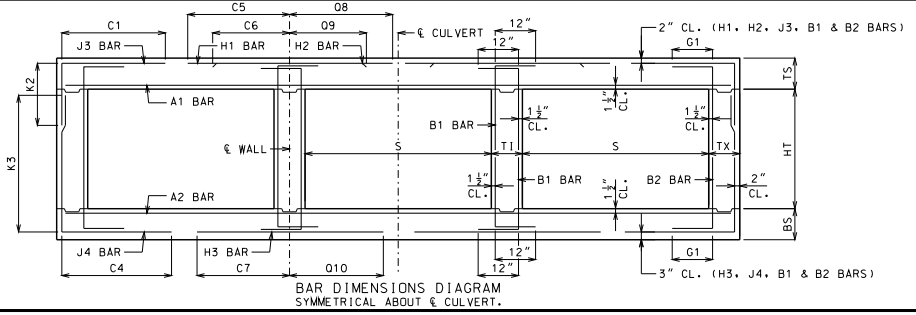

BAR DIMENSIONS DIAGRAM
SYMMETRICAL ABOUT ℄ CULVERT.

GENERAL NOTES:

IF DESIGN FILL IS BETWEEN TABULATED DESIGN FILLS, USE THE NEXT GREATER TABULATED DESIGN FILL, EXCEPT FOR DESIGN FILLS BETWEEN 2 FEET AND 4 FEET. FOR DESIGN FILLS BETWEEN 2 FEET AND 4 FEET USE THE GREATER MEMBER THICKNESS, AREA OF REINFORCEMENT AND BAR DIMENSIONS FROM THE 2 FEET AND 4 FEET TABULATED DESIGN FILLS. AREA OF REINFORCEMENT EQUALS BAR AREA PER FOOT SPACING.

SPECIAL DESIGNS ARE REQUIRED WHEN THE DESIGN FILL IS LESS THAN 1 FOOT OR GREATER THAN 50 FEET.

DIMENSIONS ARE IN INCHES UNLESS OTHERWISE SPECIFIED.

DESIGN FILLS ARE MEASURED FROM THE TOP OF TOP SLAB TO THE TOP OF EARTH FILL OR ROADWAY.

CULVERTS MEET STRENGTH AND SERVICEABILITY REQUIREMENTS FOR THE DESIGN VEHICULAR LIVE LOAD HL-93 MINUS THE LANE LOAD.

MISSOURI HIGHWAYS AND TRANSPORTATION COMMISSION
105 WEST CAPITOL
JEFFERSON CITY, MO 65102
1-888-ASK-MODOT (1-888-275-6636)

STATE OF MISSOURI
DENNIS W. HECKMANN
NUMBER PE-27141
PROFESSIONAL ENGINEER
THIS SHEET HAS BEEN SIGNED, SEALED AND DATED ELECTRONICALLY.

CONCRETE TRIPLE BOX CULVERT

MEMBER THICKNESS
BAR SIZE, SPACING & DIMENSIONS

SPAN (S): 3 FEET
HEIGHT (HT): 2 THRU 6 FEET

DATE EFFECTIVE: 12/01/2011
DATE PREPARED: 9/29/2011

703.87

SHEET NO.
1 OF 27

IF A SEAL IS PRESENT ON THIS SHEET IT HAS BEEN ELECTRONICALLY SEALED AND DATED.

SPAN (S) = 4 FT HEIGHT (HT) = 2 FT OR 3 FT

DESIGN FILL	MEMBER THICKNESS				TOP SLAB BARS														BOTTOM SLAB BARS										WALL BARS				
					A1 BARS		J3 BARS			K2		H1 BARS				H2 BARS				A2 BARS		J4 BARS			K3		H3 BARS				B1 BARS		B2 BARS	
	TS	BS	TX	TI	SIZE	SPA.	SIZE	SPA.	C1	HT=2′	HT=3′	SIZE	SPA.	C5	O8	SIZE	SPA.	C6	O9	SIZE	SPA.	SIZE	SPA.	C4	HT=2′	HT=3′	SIZE	SPA.	C7	O10	SIZE	SPA.	SIZE	SPA.	G1
1 FT	10	8	8	8	4	7	4	10.5	30.3	26.0	26.0	4	24	47.5	36.5	4	24	21.0	20.0	4	12	4	12	29.4	28	40	4	12	27.0	28.0	5	12	5	12	12
2 FT	10	8	8	8	4	7	4	10.5	30.3	26.0	26.0	4	24	47.5	36.5	4	24	21.0	20.0	4	12	4	12	27.3	28	40	4	11.5	27.0	27.0	5	12	5	12	12
4 FT	8	8	8	8	4	12	4	12	28.6	24.0	24.0	4	24	33.0	36.0	4	24	20.0	20.0	4	12	4	12	25.0	28	40	4	11.5	26.0	27.0	5	12	5	12	12
6 FT	8	8	8	8	4	12	4	12	26.0	24.0	24.0	4	24	28.0	29.0	4	24	19.0	19.0	4	12	4	12	24.1	28	40	4	10.5	25.0	26.0	5	12	5	12	12
8 FT	8	8	8	8	4	12	4	12	24.8	24.0	24.0	4	24	26.0	28.0	4	24	19.0	19.0	4	12	4	12	23.5	28	40	4	10	25.0	26.0	5	12	5	12	0
10 FT	8	8	8	8	4	12	4	12	24.1	24.0	24.0	4	24	26.0	27.0	4	24	19.0	19.0	4	12	4	12	23.1	28	40	4	9	25.0	26.0	5	12	5	12	0
12 FT	8	8	8	8	4	12	4	12	23.6	24.0	24.0	4	23	25.0	26.0	4	23	18.0	19.0	4	12	4	12	22.9	28	40	4	8	25.0	26.0	5	12	5	12	0
14 FT	8	8	8	8	4	12	4	12	23.4	24.0	24.0	4	22	25.0	26.0	4	22	18.0	18.0	4	11	4	12	22.6	28	40	4	7.5	24.0	26.0	5	12	5	12	0
16 FT	8	8	8	8	4	12	4	12	22.5	24.0	24.0	4	21	24.0	25.0	4	21	18.0	18.0	4	10.5	4	12	22.1	28	40	4	7.5	24.0	25.0	5	12	5	12	0
18 FT	8	8	8	8	4	11.5	4	12	22.5	24.0	24.0	4	20	24.0	25.0	4	20	18.0	18.0	4	9.5	4	10.5	22.1	28	40	4	7	24.0	25.0	5	12	5	12	0
20 FT	8	8	8	8	4	10.5	4	11	22.4	24.0	24.0	4	18	24.0	25.0	4	18	18.0	18.0	4	8.5	4	9.5	22.1	28	40	4	6.5	24.0	25.0	5	12	5	12	0
22 FT	8	8	8	8	4	9.5	4	10	22.4	24.0	24.0	4	17	24.0	25.0	4	17	18.0	18.0	4	7.5	4	9	22.0	28	40	4	6	24.0	25.0	5	12	5	12	0
24 FT	8	9	8	8	4	8.5	4	9	22.6	24.0	24.0	4	15	24.0	25.0	4	15	18.0	18.0	4	8	4	11.5	21.4	29	41	4	7	24.0	26.0	5	12	5	12	0
26 FT	8	9	8	8	4	8	4	8.5	22.5	24.0	24.0	4	14	24.0	25.0	4	14	18.0	18.0	4	7	4	11	21.4	29	41	4	6.5	24.0	26.0	5	12	5	12	0
28 FT	8	10	8	8	4	7.5	4	8	22.8	24.0	24.0	4	13	24.0	25.0	4	13	18.0	18.0	4	7.5	4	12	20.9	30	42	4	7	24.0	26.0	5	12	5	12	0
30 FT	9	10	8	8	4	7.5	4	10	22.1	25.0	25.0	4	15	24.0	26.0	4	15	18.0	18.0	4	7	4	12	21.0	30	42	4	7	24.0	26.0	5	12	5	12	0
32 FT	9	10	8	8	4	7	4	9.5	22.1	25.0	25.0	4	14	24.0	26.0	4	14	18.0	18.0	4	6	4	12	21.0	30	42	4	6	24.0	26.0	5	12	5	12	0
34 FT	9	11	8	8	4	6.5	4	9	22.3	25.0	25.0	4	13	24.0	26.0	4	13	18.0	18.0	4	6.5	4	10.5	20.6	31	43	4	7	24.0	26.0	5	12	5	12	0
36 FT	10	11	8	8	4	7	4	10	21.9	26.0	26.0	4	14	24.0	26.0	4	14	18.0	19.0	4	6.5	4	10.5	20.9	31	43	4	7	24.0	26.0	5	12	5	12	0
38 FT	10	12	8	8	4	6.5	4	9.5	22.0	26.0	26.0	4	13	24.0	26.0	4	13	18.0	19.0	4	6.5	4	9.5	20.5	32	44	4	7.5	24.0	27.0	5	12	5	12	0
40 FT	10	12	8	8	4	6	4	9	22.0	26.0	26.0	4	13	24.0	26.0	4	13	18.0	19.0	4	6.5	4	9.5	20.5	32	44	4	7	24.0	27.0	5	12	5	12	0
42 FT	11	12	8	8	4	6.5	4	9.5	21.6	27.0	27.0	4	14	23.0	26.0	4	14	18.0	19.0	4	6	4	9.5	20.8	32	44	4	6.5	24.0	26.0	5	12	5	12	0
44 FT	11	12	8	8	4	6	4	9.5	21.6	27.0	27.0	4	13	23.0	26.0	4	13	18.0	19.0	4	6	4	9.5	20.8	32	44	4	6	24.0	26.0	5	12	5	12	0
46 FT	11	13	8	8	4	6	4	8.5	21.8	27.0	27.0	4	12	23.0	26.0	4	12	18.0	19.0	4	6	4	8.5	20.5	33	45	4	6.5	23.0	27.0	5	12	5	12	0
48 FT	12	13	8	8	4	6	4	8.5	21.5	28.0	28.0	4	13	23.0	26.0	4	13	18.0	19.0	4	6	4	8.5	20.8	33	45	4	6.5	24.0	27.0	5	12	5	12	0
50 FT	12	13	8	8	5	9	4	8.5	21.5	28.0	28.0	4	13	23.0	26.0	4	13	18.0	19.0	5	8.5	4	8.5	20.8	33	45	4	6	24.0	27.0	5	12	5	12	0

SPAN (S) = 4 FT HEIGHT (HT) = 4 FT OR 5 FT

DESIGN FILL	MEMBER THICKNESS				TOP SLAB BARS														BOTTOM SLAB BARS										WALL BARS				
					A1 BARS		J3 BARS			K2		H1 BARS				H2 BARS				A2 BARS		J4 BARS			K3		H3 BARS				B1 BARS		B2 BARS	
	TS	BS	TX	TI	SIZE	SPA.	SIZE	SPA.	C1	HT=4′	HT=5′	SIZE	SPA.	C5	O8	SIZE	SPA.	C6	O9	SIZE	SPA.	SIZE	SPA.	C4	HT=4′	HT=5′	SIZE	SPA.	C7	O10	SIZE	SPA.	SIZE	SPA.	G1
1 FT	10	8	8	8	4	7	4	10.5	30.3	26.0	26.0	4	24	47.5	36.5	4	24	21.0	21.0	4	12	4	12	42.0	52	64	4	12	28.0	28.0	5	12	5	12	12
2 FT	10	8	8	8	4	7	4	10.5	30.3	26.0	26.0	4	24	47.5	36.5	4	24	21.0	21.0	4	12	4	12	39.1	52	64	4	11	27.0	28.0	5	12	5	12	12
4 FT	8	8	8	8	4	12	4	12	30.3	24.0	24.0	4	24	47.5	37.0	4	24	20.0	20.0	4	12	4	12	34.8	52	64	4	11	26.0	27.0	5	12	5	12	12
6 FT	8	8	8	8	4	12	4	12	34.6	24.0	24.0	4	24	29.0	30.0	4	24	19.0	19.0	4	12	4	11.5	32.1	52	64	4	10.5	25.0	26.0	5	12	5	12	12
8 FT	8	8	8	8	4	12	4	12	31.4	24.0	24.0	4	24	27.0	28.0	4	24	19.0	19.0	4	12	4	11	30.3	52	64	4	9.5	25.0	26.0	5	12	5	12	0
10 FT	8	8	8	8	4	12	4	12	29.9	24.0	24.0	4	24	26.0	27.0	4	24	19.0	19.0	4	12	4	10.5	29.3	52	64	4	9	25.0	26.0	5	12	5	12	0
12 FT	8	8	8	8	4	12	4	12	29.1	24.0	24.0	4	24	25.0	27.0	4	24	18.0	19.0	4	11.5	4	10	28.5	52	64	4	8.5	24.0	26.0	5	12	5	12	0
14 FT	8	8	8	8	4	12	4	11	28.5	24.0	24.0	4	23	25.0	26.0	4	23	18.0	19.0	4	10.5	4	9.5	28.1	52	64	4	7.5	24.0	26.0	5	12	5	12	0
16 FT	8	8	8	8	4	12	4	11	26.9	24.0	24.0	4	22	24.0	26.0	4	22	18.0	19.0	4	10	4	9.5	26.6	52	64	4	7.5	24.0	26.0	5	12	5	12	0
18 FT	8	8	8	8	4	11	4	10	26.8	24.0	24.0	4	21	24.0	26.0	4	21	18.0	19.0	4	9	4	8.5	26.5	52	64	4	7	24.0	26.0	5	12	5	12	0
20 FT	8	8	8	8	4	10	4	9	26.8	24.0	24.0	4	19	24.0	26.0	4	19	18.0	19.0	4	8	4	8	26.4	52	64	4	6.5	24.0	26.0	5	12	5	12	0
22 FT	8	8	8	8	4	9	4	8	26.6	24.0	24.0	4	17	24.0	26.0	4	17	18.0	18.0	4	7	4	7	26.4	52	64	4	6	24.0	26.0	5	12	5	12	0
24 FT	8	9	8	8	4	8.5	4	7.5	26.6	24.0	24.0	4	16	24.0	25.0	4	16	18.0	18.0	4	7.5	4	8.5	26.6	53	65	4	7	24.0	26.0	5	12	5	12	0
26 FT	8	9	8	8	4	8	4	7	26.6	24.0	24.0	4	14	24.0	25.0	4	14	18.0	18.0	4	7	4	8	26.5	53	65	4	6.5	24.0	26.0	5	12	5	12	0
28 FT	8	10	8	8	4	7.5	4	6	26.6	24.0	24.0	4	13	24.0	25.0	4	13	18.0	18.0	4	7.5	4	9.5	26.8	54	66	4	7.5	24.0	26.0	5	12	5	12	0
30 FT	9	10	8	8	4	7.5	4	7.5	26.9	25.0	25.0	4	15	24.0	26.0	4	15	18.0	19.0	4	7	4	9	26.9	54	66	4	7	24.0	26.0	5	12	5	12	0
32 FT	9	10	8	8	4	7	4	7	26.9	25.0	25.0	4	14	24.0	26.0	4	14	18.0	19.0	4	6	4	8	26.8	54	66	4	6	24.0	26.0	5	12	5	12	0
34 FT	9	11	8	8	4	6.5	4	6.5	26.9	25.0	25.0	4	13	24.0	26.0	4	13	18.0	18.0	4	6.5	4	8.5	27.0	55	67	4	7	24.0	26.0	5	12	5	12	0
36 FT	10	11	8	8	4	7	4	6.5	27.1	26.0	26.0	4	14	23.0	26.0	4	14	18.0	19.0	4	6.5	4	8	27.1	55	67	4	7	24.0	26.0	5	12	5	12	0
38 FT	10	12	8	8	4	6.5	4	6	27.3	26.0	26.0	4	14	23.0	26.0	4	14	18.0	19.0	4	6.5	4	8	27.4	56	68	4	7.5	24.0	26.0	5	12	5	12	0
40 FT	10	12	8	8	4	6	5	8	27.1	26.0	26.0	4	13	23.0	26.0	4	13	18.0	19.0	4	6.5	4	7.5	27.4	56	68	4	7	24.0	26.0	5	12	5	12	0
42 FT	11	12	8	8	4	6.5	5	9	27.4	27.0	27.0	4	14	23.0	26.0	4	14	18.0	19.0	4	6	4	7	27.4	56	68	4	6.5	24.0	26.0	5	12	5	12	0
44 FT	11	12	8	8	4	6	5	8.5	27.4	27.0	27.0	4	13	23.0	26.0	4	13	18.0	19.0	4	6	4	6.5	27.4	56	68	4	6.5	24.0	26.0	5	12	5	12	0
46 FT	11	13	8	8	4	6	5	8.5	27.5	27.0	27.0	4	13	23.0	26.0	4	13	18.0	19.0	4	6	4	7	27.6	57	69	4	6.5	24.0	26.0	5	12	5	12	0
48 FT	12	13	8	8	4	6	5	8.5	27.6	28.0	28.0	4	14	23.0	25.0	4	14	18.0	18.0	4	6	4	6.5	27.8	57	69	4	6.5	24.0	26.0	5	12	5	11.5	0
50 FT	12	13	8	8	4	6	5	8.5	27.6	28.0	28.0	4	13	23.0	25.0	4	13	18.0	18.0	5	9	4	6	27.8	57	69	4	6	24.0	26.0	5	12	5	11	0

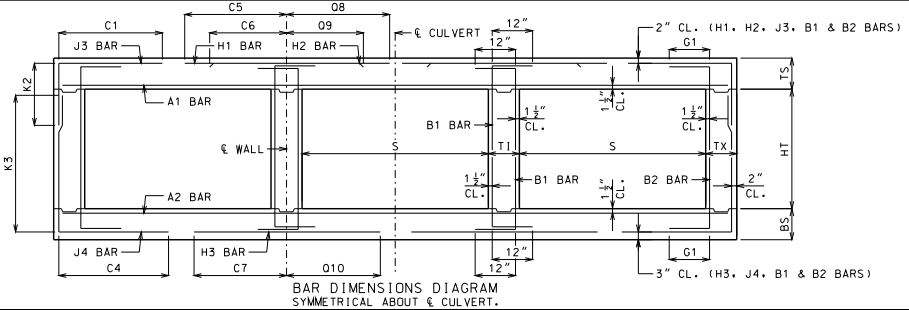

BAR DIMENSIONS DIAGRAM
SYMMETRICAL ABOUT ℄ CULVERT.

GENERAL NOTES:

IF DESIGN FILL IS BETWEEN TABULATED DESIGN FILLS, USE THE NEXT GREATER TABULATED DESIGN FILL, EXCEPT FOR DESIGN FILLS BETWEEN 2 FEET AND 4 FEET. FOR DESIGN FILLS BETWEEN 2 FEET AND 4 FEET USE THE GREATER MEMBER THICKNESS, AREA OF REINFORCEMENT AND BAR DIMENSIONS FROM THE 2 FEET AND 4 FEET TABULATED DESIGN FILLS. AREA OF REINFORCEMENT EQUALS BAR AREA PER FOOT SPACING.

SPECIAL DESIGNS ARE REQUIRED WHEN THE DESIGN FILL IS LESS THAN 1 FOOT OR GREATER THAN 50 FEET.

DIMENSIONS ARE IN INCHES UNLESS OTHERWISE SPECIFIED.

DESIGN FILLS ARE MEASURED FROM THE TOP OF TOP SLAB TO THE TOP OF EARTH FILL OR ROADWAY.

CULVERTS MEET STRENGTH AND SERVICEABILITY REQUIREMENTS FOR THE DESIGN VEHICULAR LIVE LOAD HL-93 MINUS THE LANE LOAD.

MISSOURI HIGHWAYS AND TRANSPORTATION COMMISSION
105 WEST CAPITOL
JEFFERSON CITY, MO 65102
1-888-ASK-MODOT (1-888-275-6636)

STATE OF MISSOURI — DENNIS W. HECKMANN — NUMBER PE-27141 — PROFESSIONAL ENGINEER
THIS SHEET HAS BEEN SIGNED, SEALED AND DATED ELECTRONICALLY.

CONCRETE TRIPLE BOX CULVERT

MEMBER THICKNESS
BAR SIZE, SPACING & DIMENSIONS

SPAN (S): 4 FEET
HEIGHT (HT): 2 THRU 5 FEET

DATE EFFECTIVE: 12/01/2011
DATE PREPARED: 9/29/2011

703.87

SHEET NO. 2 OF 27

IF A SEAL IS PRESENT ON THIS SHEET IT HAS BEEN ELECTRONICALLY SEALED AND DATED.

SPAN (S) = 4 FT HEIGHT (HT) = 6 FT OR 7 FT

DESIGN FILL	MEMBER THICKNESS				TOP SLAB BARS														BOTTOM SLAB BARS										WALL BARS				
					A1 BARS		J3 BARS					H1 BARS				H2 BARS				A2 BARS		J4 BARS				H3 BARS				B1 BARS		B2 BARS	
	TS	BS	TX	TI	SIZE	SPA.	SIZE	SPA.	C1	K2 HT=6′	K2 HT=7′	SIZE	SPA.	C5	O8	SIZE	SPA.	C6	O9	SIZE	SPA.	SIZE	SPA.	C4	K3 HT=6′	K3 HT=7′	SIZE	SPA.	C7	O10	SIZE	SPA.	SIZE	SPA.	G1
1 FT	10	8	8	8	4	6.5	4	10.5	30.3	26.0	26.0	4	24	47.5	36.5	4	24	22.0	21.0	4	12	4	9	42.0	76	88	4	11.5	40.0	28.0	5	12	5	12	12
2 FT	10	8	8	8	4	6.5	4	10.5	30.3	26.0	26.0	4	24	47.5	36.5	4	24	21.0	21.0	4	12	4	8.5	42.0	76	88	4	11	40.0	28.0	5	12	5	12	12
4 FT	8	8	8	8	4	12	4	10	30.3	24.0	24.0	4	24	47.5	37.0	4	24	20.0	20.0	4	12	4	7.5	42.0	76	88	4	11	29.0	27.0	5	12	5	12	12
6 FT	8	8	8	8	4	12	4	10	30.3	24.0	24.0	4	24	47.5	29.0	4	24	19.0	19.0	4	12	4	7	42.0	76	88	4	10	27.0	26.0	5	12	5	12	12
8 FT	8	8	8	8	4	12	4	9	30.3	24.0	24.0	4	24	47.5	28.0	4	24	19.0	19.0	4	12	4	6.5	42.0	76	88	4	9.5	26.0	26.0	5	12	5	12	0
10 FT	8	8	8	8	4	12	4	8	43.1	24.0	24.0	4	24	28.0	27.0	4	24	18.0	19.0	4	12	4	6.5	40.6	76	88	4	9	25.0	26.0	5	12	5	12	0
12 FT	8	8	8	8	4	12	4	7.5	40.5	24.0	24.0	4	24	27.0	26.0	4	24	18.0	19.0	4	11.5	4	6	39.1	76	88	4	8.5	25.0	26.0	5	12	5	12	0
14 FT	8	8	8	8	4	12	4	6.5	39.3	24.0	24.0	4	23	26.0	26.0	4	23	18.0	19.0	4	10.5	5	6.5	38.4	76	88	4	8	25.0	26.0	5	12	5	12	0
16 FT	8	8	8	8	4	12	4	6.5	35.5	24.0	24.0	4	23	24.0	25.0	4	23	18.0	19.0	4	10	5	6.5	35.4	76	88	4	7.5	24.0	26.0	5	12	5	12	0
18 FT	8	8	8	8	4	11.5	4	6	35.3	24.0	24.0	4	21	24.0	25.0	4	21	18.0	18.0	4	9	5	6	35.1	76	88	4	7	24.0	26.0	5	12	5	12	0
20 FT	8	8	8	8	4	10	5	6.5	35.0	24.0	28.0	4	19	24.0	25.0	4	19	18.0	18.0	4	8	6	6.5	38.0	76	88	4	6.5	24.0	26.0	5	12	5	12	0
22 FT	8	9	8	8	4	9.5	5	6	34.6	24.0	28.0	4	18	24.0	25.0	4	18	18.0	18.0	4	8.5	5	6	36.1	77	89	4	8	25.0	26.0	5	12	5	11.5	0
24 FT	8	9	9	8	4	8.5	5	6.5	34.1	24.0	28.0	4	16	24.0	25.0	4	16	18.0	18.0	4	8	5	7	35.6	77	89	4	7.5	25.0	26.0	5	12	5	11.5	0
26 FT	8	9	9	8	4	8	5	6	34.0	24.0	28.0	4	15	24.0	25.0	4	15	18.0	18.0	4	7.5	5	6.5	35.5	77	89	4	7	25.0	26.0	5	12	5	11	0
28 FT	8	10	9	8	4	7.5	6	7.5	36.8	24.0	28.0	4	14	24.0	25.0	4	14	18.0	18.0	4	7.5	5	7	36.6	78	90	4	7.5	25.0	26.0	5	12	5	10.5	0
30 FT	9	10	9	8	4	8	5	6	35.0	25.0	29.0	4	15	24.0	25.0	4	15	18.0	18.0	4	7	5	6.5	36.4	78	90	4	7	25.0	26.0	5	12	5	10	0
32 FT	9	10	9	8	4	7.5	5	6	35.0	25.0	29.0	4	14	24.0	25.0	4	14	18.0	18.0	4	6.5	5	6	36.3	78	90	4	6.5	25.0	26.0	5	12	5	9.5	0
34 FT	9	11	9	8	4	7	5	6	34.9	25.0	29.0	4	13	24.0	25.0	4	13	18.0	18.0	4	7	5	6.5	37.4	79	91	4	7	25.0	26.0	5	12	5	9	0
36 FT	10	11	9	8	4	7	5	6.5	35.9	26.0	30.0	4	15	24.0	25.0	4	15	18.0	18.0	4	7	5	6	37.0	79	91	4	7	25.0	26.0	5	12	5	8.5	0
38 FT	10	11	9	8	4	7	5	6	35.8	26.0	30.0	4	14	24.0	25.0	4	14	18.0	18.0	4	6.5	6	7.5	40.0	79	91	4	6.5	25.0	26.0	5	12	5	8.5	0
40 FT	10	12	9	8	4	6.5	5	6	35.6	26.0	30.0	4	13	24.0	25.0	4	13	18.0	18.0	4	6.5	5	6	38.3	80	92	4	7	25.0	26.0	5	12	5	8.5	0
42 FT	10	12	9	8	4	6	5	6	35.6	30.0	30.0	4	12	24.0	25.0	4	12	18.0	18.0	4	6.5	6	7.5	41.1	80	92	4	6.5	25.0	26.0	5	12	5	8.5	0
44 FT	11	12	9	8	4	6.5	6	7.5	39.5	31.0	35.0	4	14	24.0	25.0	4	14	18.0	18.0	4	6	6	7	40.9	80	92	4	6.5	25.0	26.0	5	12	5	8.5	0
46 FT	11	13	9	8	4	6	6	6.5	39.4	31.0	35.0	4	13	24.0	25.0	4	13	18.0	18.0	4	6.5	6	7.5	42.0	81	93	4	6.5	26.0	26.0	5	12	5	8.5	0
48 FT	11	13	10	8	4	6	5	6	36.3	27.0	31.0	4	13	23.0	25.0	4	13	18.0	18.0	4	6	5	6.5	38.4	81	93	4	6.5	25.0	26.0	5	12	5	8	0
50 FT	12	13	11	8	4	6	5	7	37.0	28.0	32.0	4	14	23.0	25.0	4	14	18.0	18.0	4	6	5	7.5	37.9	81	93	4	6	25.0	26.0	5	12	5	7.5	0

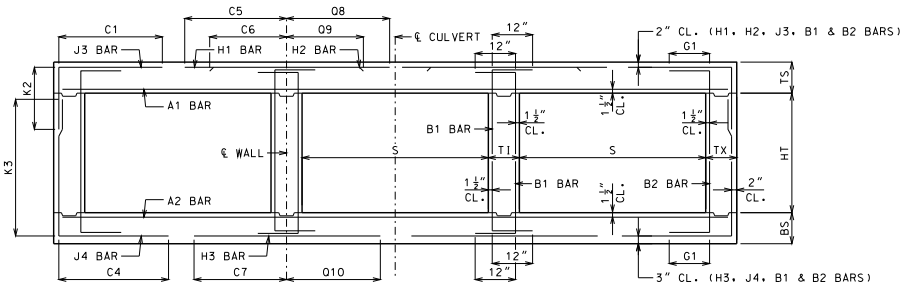

BAR DIMENSIONS DIAGRAM
SYMMETRICAL ABOUT ℄ CULVERT.

GENERAL NOTES:

IF DESIGN FILL IS BETWEEN TABULATED DESIGN FILLS, USE THE NEXT GREATER TABULATED DESIGN FILL, EXCEPT FOR DESIGN FILLS BETWEEN 2 FEET AND 4 FEET. FOR DESIGN FILLS BETWEEN 2 FEET AND 4 FEET USE THE GREATER MEMBER THICKNESS, AREA OF REINFORCEMENT AND BAR DIMENSIONS FROM THE 2 FEET AND 4 FEET TABULATED DESIGN FILLS. AREA OF REINFORCEMENT EQUALS BAR AREA PER FOOT SPACING.

SPECIAL DESIGNS ARE REQUIRED WHEN THE DESIGN FILL IS LESS THAN 1 FOOT OR GREATER THAN 50 FEET.

DIMENSIONS ARE IN INCHES UNLESS OTHERWISE SPECIFIED.

DESIGN FILLS ARE MEASURED FROM THE TOP OF TOP SLAB TO THE TOP OF EARTH FILL OR ROADWAY.

CULVERTS MEET STRENGTH AND SERVICEABILITY REQUIREMENTS FOR THE DESIGN VEHICULAR LIVE LOAD HL-93 MINUS THE LANE LOAD.

MISSOURI HIGHWAYS AND TRANSPORTATION COMMISSION
105 WEST CAPITOL
JEFFERSON CITY, MO 65102
1-888-ASK-MODOT (1-888-275-6636)

STATE OF MISSOURI
DENNIS W. HECKMAN
NUMBER PE-27141
PROFESSIONAL ENGINEER
THIS SHEET HAS BEEN SIGNED, SEALED AND DATED ELECTRONICALLY.

CONCRETE TRIPLE BOX CULVERT

MEMBER THICKNESS
BAR SIZE, SPACING & DIMENSIONS

SPAN (S): 4 FEET
HEIGHT (HT): 6 THRU 7 FEET

DATE EFFECTIVE: 12/01/2011
DATE PREPARED: 9/29/2011

703.87

SHEET NO.
3 OF 27

IF A SEAL IS PRESENT ON THIS SHEET IT HAS BEEN ELECTRONICALLY SEALED AND DATED.

SPAN (S) = 5 FT HEIGHT (HT) = 3 FT OR 4 FT

DESIGN FILL	MEMBER THICKNESS				TOP SLAB BARS														BOTTOM SLAB BARS										WALL BARS				
					A1 BARS		J3 BARS			K2		H1 BARS				H2 BARS				A2 BARS		J4 BARS			K3		H3 BARS				B1 BARS		B2 BARS	
	TS	BS	TX	TI	SIZE	SPA.	SIZE	SPA.	C1	HT=3′	HT=4′	SIZE	SPA.	C5	O8	SIZE	SPA.	C6	O9	SIZE	SPA.	SIZE	SPA.	C4	HT=3′	HT=4′	SIZE	SPA.	C7	O10	SIZE	SPA.	SIZE	SPA.	G1
1 FT	10	8	8	8	5	9	4	10.5	33.9	26.0	26.0	4	19	56.5	42.5	4	19	22.0	21.0	4	12	4	12	33.9	40	52	4	8.5	30.0	31.0	5	12	5	12	12
2 FT	11	8	8	8	4	6	4	9.5	33.9	27.0	27.0	4	21	56.5	42.5	4	21	22.0	21.0	4	12	4	12	31.1	40	52	4	8.5	30.0	31.0	5	12	5	12	12
4 FT	8	8	8	8	4	10.5	4	12	32.1	24.0	24.0	4	20	38.0	46.0	4	20	20.0	20.0	4	12	4	12	28.4	40	52	4	8.5	29.0	30.0	5	12	5	12	12
6 FT	8	8	8	8	4	12	4	12	29.3	24.0	24.0	4	21	31.0	34.0	4	21	20.0	20.0	4	12	4	12	27.0	40	52	4	8	28.0	29.0	5	12	5	12	12
8 FT	8	8	8	8	4	12	4	12	27.5	24.0	24.0	4	20	30.0	31.0	4	20	19.0	19.0	4	11	4	11	26.3	40	52	4	7	28.0	29.0	5	12	5	12	0
10 FT	8	8	8	8	4	11	4	12	26.6	24.0	24.0	4	18	29.0	30.0	4	18	19.0	19.0	4	9.5	4	10.5	25.6	40	52	4	6.5	27.0	29.0	5	12	5	12	0
12 FT	8	8	8	8	4	10	4	10.5	26.1	24.0	24.0	4	16	28.0	30.0	4	16	19.0	19.0	4	8	4	9.5	25.3	40	52	4	6	27.0	29.0	5	12	5	12	0
14 FT	8	8	8	8	4	8.5	4	9.5	25.6	24.0	24.0	4	14	28.0	29.0	4	14	19.0	19.0	4	7	4	8.5	25.0	40	52	5	7	27.0	29.0	5	12	5	12	0
16 FT	8	9	8	8	4	8	4	8.5	25.6	24.0	24.0	4	13	28.0	29.0	4	13	19.0	19.0	4	7	4	11	24.3	41	53	4	6	27.0	29.0	5	12	5	12	0
18 FT	8	9	8	8	4	7.5	4	8	24.8	24.0	24.0	4	12	27.0	28.0	4	12	19.0	19.0	4	7	4	10.5	23.5	41	53	4	6	27.0	29.0	5	12	5	12	0
20 FT	8	9	8	8	4	7	4	7.5	24.6	24.0	24.0	5	17	27.0	28.0	5	17	19.0	19.0	4	6	4	9.5	23.5	41	53	5	7	27.0	29.0	5	12	5	12	0
22 FT	9	10	8	8	4	7	4	9	24.3	25.0	25.0	4	12	27.0	29.0	4	12	19.0	19.0	4	6.5	4	12	23.1	42	54	4	6	27.0	29.0	5	12	5	12	0
24 FT	9	11	8	8	4	6.5	4	8	24.4	25.0	25.0	5	17	27.0	29.0	5	17	19.0	19.0	4	6.5	4	10.5	22.6	43	55	4	6	26.0	30.0	5	12	5	12	0
26 FT	10	11	8	8	4	6.5	4	8.5	23.9	26.0	26.0	5	18	26.0	29.0	5	18	19.0	19.0	4	6	4	10.5	22.9	43	55	5	8	26.0	29.0	5	12	5	12	0
28 FT	10	11	8	8	4	6	4	8	23.9	26.0	26.0	5	17	26.0	29.0	5	17	19.0	19.0	5	8.5	4	10.5	22.9	43	55	5	8	26.0	29.0	5	12	5	12	0
30 FT	10	12	8	8	5	8	4	7	24.0	26.0	26.0	5	16	26.0	29.0	5	16	19.0	19.0	5	9	4	9.5	22.5	44	56	5	8.5	26.0	30.0	5	12	5	12	0
32 FT	11	12	8	8	5	9	4	8	23.6	27.0	27.0	5	17	26.0	29.0	5	17	19.0	19.0	5	8.5	4	9.5	22.8	44	56	5	8	26.0	30.0	5	12	5	12	0
34 FT	11	13	8	8	5	8.5	4	7	23.8	27.0	27.0	5	16	26.0	29.0	5	16	19.0	19.0	5	8.5	4	8.5	22.5	45	57	5	8.5	26.0	30.0	5	12	5	12	0
36 FT	12	13	8	8	5	8.5	4	8	23.5	28.0	28.0	5	17	26.0	29.0	5	17	19.0	19.0	5	8	4	8.5	22.8	45	57	5	8	26.0	30.0	5	12	5	12	0
38 FT	12	14	8	8	5	8	4	7	23.6	28.0	28.0	5	16	26.0	29.0	5	16	19.0	19.0	5	8	4	7.5	22.6	46	58	5	8.5	26.0	30.0	5	12	5	12	0
40 FT	13	14	8	8	5	8	4	7.5	23.4	29.0	29.0	5	16	26.0	29.0	5	16	19.0	19.0	5	8	4	7.5	22.8	46	58	5	8	26.0	30.0	5	12	5	12	0
42 FT	13	14	8	8	5	7.5	4	7.5	23.4	29.0	29.0	5	16	26.0	29.0	5	16	19.0	19.0	5	7.5	4	7.5	22.8	46	58	5	7.5	26.0	30.0	5	12	5	12	0
44 FT	13	15	8	8	5	7.5	4	7	23.6	29.0	29.0	5	15	26.0	29.0	5	15	19.0	19.0	5	7.5	4	7	22.8	47	59	5	8	26.0	30.0	5	12	5	12	0
46 FT	14	15	8	8	5	7.5	4	7	23.4	30.0	30.0	5	16	25.0	29.0	5	16	18.0	19.0	5	7.5	4	7	22.9	47	59	5	7.5	26.0	30.0	5	12	5	12	0
48 FT	14	15	8	8	5	7	4	7	23.4	30.0	30.0	5	15	25.0	29.0	5	15	18.0	19.0	5	7	4	7	22.9	47	59	5	7	26.0	30.0	5	12	5	12	0
50 FT	14	16	8	8	5	7	4	6.5	23.6	30.0	30.0	5	15	25.0	29.0	5	15	18.0	19.0	5	7	4	6.5	22.9	48	60	5	7.5	26.0	30.0	5	12	5	12	0

SPAN (S) = 5 FT HEIGHT (HT) = 5 FT OR 6 FT

DESIGN FILL	MEMBER THICKNESS				TOP SLAB BARS														BOTTOM SLAB BARS										WALL BARS				
					A1 BARS		J3 BARS			K2		H1 BARS				H2 BARS				A2 BARS		J4 BARS			K3		H3 BARS				B1 BARS		B2 BARS	
	TS	BS	TX	TI	SIZE	SPA.	SIZE	SPA.	C1	HT=5′	HT=6′	SIZE	SPA.	C5	O8	SIZE	SPA.	C6	O9	SIZE	SPA.	SIZE	SPA.	C4	HT=5′	HT=6′	SIZE	SPA.	C7	O10	SIZE	SPA.	SIZE	SPA.	G1
1 FT	11	8	8	8	4	6	4	9.5	33.9	27.0	27.0	4	22	56.5	42.5	4	22	23.0	23.0	4	12	4	10	47.5	64	76	4	8.5	31.0	31.0	5	12	5	12	12
2 FT	11	8	8	8	4	6	4	9.5	33.9	27.0	27.0	4	21	56.5	42.5	4	21	22.0	22.0	4	11	4	9.5	42.8	64	76	4	8	30.0	31.0	5	12	5	12	12
4 FT	8	8	8	8	4	10	4	10	33.9	24.0	24.0	4	20	56.5	46.0	4	20	21.0	21.0	4	12	4	9	38.9	64	76	4	8.5	29.0	30.0	5	12	5	12	12
6 FT	8	8	8	8	4	12	4	10.5	38.3	24.0	24.0	4	21	33.0	35.0	4	21	20.0	20.0	4	12	4	8.5	35.5	64	76	4	7.5	28.0	30.0	5	12	5	12	12
8 FT	8	8	8	8	4	12	4	10	34.4	24.0	24.0	4	20	30.0	31.0	4	20	19.0	20.0	4	10.5	4	8	33.5	64	76	4	7	28.0	29.0	5	12	5	12	0
10 FT	8	8	8	8	4	10.5	4	9	32.9	24.0	24.0	4	18	29.0	30.0	4	18	19.0	19.0	4	9	4	7.5	32.3	64	76	4	6.5	27.0	29.0	5	12	5	12	0
12 FT	8	8	8	8	4	9.5	4	8	31.9	24.0	24.0	4	16	28.0	30.0	4	16	19.0	19.0	4	7.5	4	7	31.3	64	76	4	6	27.0	29.0	5	12	5	12	0
14 FT	8	8	8	8	4	8.5	4	7	31.1	24.0	24.0	4	14	28.0	29.0	4	14	19.0	19.0	4	7	4	6	30.8	64	76	5	7	27.0	29.0	5	12	5	12	0
16 FT	8	9	8	8	4	8	4	6.5	30.8	24.0	24.0	4	13	28.0	29.0	4	13	19.0	19.0	4	7	4	7	30.9	65	77	4	6	27.0	29.0	5	12	5	12	0
18 FT	8	9	8	8	4	7.5	4	6.5	29.1	24.0	24.0	4	12	27.0	28.0	4	12	19.0	19.0	4	6.5	4	7	29.1	65	77	4	6	27.0	29.0	5	12	5	12	0
20 FT	8	9	8	8	4	7	5	7	29.0	24.0	24.0	5	17	27.0	28.0	5	17	19.0	19.0	4	6	4	6.5	29.0	65	77	5	7.5	27.0	29.0	5	12	5	12	0
22 FT	9	10	8	8	4	7	4	6.5	29.1	25.0	25.0	4	12	26.0	29.0	4	12	19.0	19.0	4	6	4	7.5	29.3	66	78	4	6	27.0	29.0	5	12	5	12	0
24 FT	9	10	8	8	4	6.5	4	6	29.1	25.0	25.0	5	17	26.0	29.0	5	17	19.0	19.0	5	8.5	4	7	29.1	66	78	5	7.5	27.0	29.0	5	12	5	12	0
26 FT	10	11	8	8	4	6.5	5	8	29.4	26.0	26.0	4	12	26.0	29.0	4	12	19.0	19.0	4	6	4	6.5	29.4	67	79	5	8.5	26.0	29.0	5	12	5	12	0
28 FT	10	11	8	8	4	6	5	7.5	29.3	26.0	26.0	5	17	26.0	29.0	5	17	19.0	19.0	5	8.5	4	6	29.4	67	79	5	8	26.0	29.0	5	12	5	12	0
30 FT	10	12	8	8	5	8.5	5	7.5	29.3	26.0	26.0	5	16	26.0	29.0	5	16	19.0	19.0	5	9	4	6	29.5	68	80	5	8.5	26.0	30.0	5	12	5	12	0
32 FT	11	12	8	8	5	9	5	8	29.5	27.0	31.0	5	17	26.0	29.0	5	17	19.0	19.0	5	8.5	5	8	29.6	68	80	5	8	26.0	30.0	5	12	5	12	0
34 FT	11	13	8	8	5	8.5	5	7.5	29.5	27.0	31.0	5	16	26.0	29.0	5	16	19.0	19.0	5	8.5	5	8.5	29.8	69	81	5	8.5	26.0	30.0	5	12	5	11.5	0
36 FT	12	13	8	8	5	8.5	5	8	29.8	28.0	32.0	5	17	26.0	29.0	5	17	18.0	19.0	5	8	5	8	29.9	69	81	5	8	26.0	30.0	5	12	5	11	0
38 FT	12	14	8	8	5	8	5	7.5	29.8	28.0	32.0	5	16	26.0	29.0	5	16	18.0	19.0	5	8.5	5	8.5	30.1	70	82	5	8.5	26.0	30.0	5	12	5	10	0
40 FT	12	14	8	8	5	7.5	5	7	29.8	28.0	32.0	5	15	26.0	29.0	5	15	18.0	19.0	5	8	5	8	30.0	70	82	5	8	26.0	30.0	5	12	5	9.5	0
42 FT	13	14	8	8	5	8	5	7.5	29.9	29.0	33.0	5	16	26.0	29.0	5	16	18.0	19.0	5	7.5	5	7.5	30.1	70	82	5	7.5	26.0	30.0	5	12	5	9.5	0
44 FT	13	15	8	8	5	7.5	5	7	30.0	29.0	33.0	5	15	26.0	29.0	5	15	18.0	19.0	5	8	5	8	30.4	71	83	5	8	27.0	30.0	5	12	5	9.5	0
46 FT	14	15	8	8	5	7.5	5	6.5	30.1	30.0	34.0	5	16	26.0	28.0	5	16	18.0	19.0	5	7.5	5	7.5	30.5	71	83	5	7.5	27.0	30.0	5	12	5	9.5	0
48 FT	14	15	9	8	5	7.5	5	8	30.6	30.0	34.0	5	16	26.0	28.0	5	16	18.0	19.0	5	7.5	5	8	30.8	71	83	5	7.5	27.0	30.0	5	12	5	9	0
50 FT	14	16	9	8	5	7	5	7.5	30.8	30.0	34.0	5	15	26.0	28.0	5	15	18.0	19.0	5	7.5	5	8	31.0	72	84	5	7.5	27.0	30.0	5	12	5	8.5	0

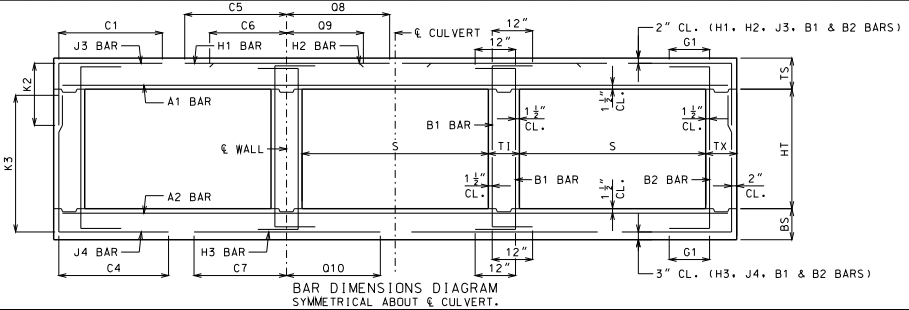

BAR DIMENSIONS DIAGRAM
SYMMETRICAL ABOUT ℄ CULVERT.

GENERAL NOTES:

IF DESIGN FILL IS BETWEEN TABULATED DESIGN FILLS, USE THE NEXT GREATER TABULATED DESIGN FILL, EXCEPT FOR DESIGN FILLS BETWEEN 2 FEET AND 4 FEET. FOR DESIGN FILLS BETWEEN 2 FEET AND 4 FEET USE THE GREATER MEMBER THICKNESS, AREA OF REINFORCEMENT AND BAR DIMENSIONS FROM THE 2 FEET AND 4 FEET TABULATED DESIGN FILLS. AREA OF REINFORCEMENT EQUALS BAR AREA PER FOOT SPACING.

SPECIAL DESIGNS ARE REQUIRED WHEN THE DESIGN FILL IS LESS THAN 1 FOOT OR GREATER THAN 50 FEET.

DIMENSIONS ARE IN INCHES UNLESS OTHERWISE SPECIFIED.

DESIGN FILLS ARE MEASURED FROM THE TOP OF TOP SLAB TO THE TOP OF EARTH FILL OR ROADWAY.

CULVERTS MEET STRENGTH AND SERVICEABILITY REQUIREMENTS FOR THE DESIGN VEHICULAR LIVE LOAD HL-93 MINUS THE LANE LOAD.

MISSOURI HIGHWAYS AND TRANSPORTATION COMMISSION
105 WEST CAPITOL
JEFFERSON CITY, MO 65102
1-888-ASK-MODOT (1-888-275-6636)

STATE OF MISSOURI — DENNIS W. HECKMANN — NUMBER PE-27141 — PROFESSIONAL ENGINEER
THIS SHEET WAS SIGNED, SEALED AND DATED ELECTRONICALLY.

CONCRETE TRIPLE BOX CULVERT

MEMBER THICKNESS
BAR SIZE, SPACING & DIMENSIONS

SPAN (S): 5 FEET
HEIGHT (HT): 3 THRU 6 FEET

DATE EFFECTIVE: 12/01/2011
DATE PREPARED: 9/29/2011

703.87

SHEET NO. 4 OF 27

IF A SEAL IS PRESENT ON THIS SHEET IT HAS BEEN ELECTRONICALLY SEALED AND DATED.

SPAN (S) = 5 FT HEIGHT (HT) = 7 FT OR 8 FT

DESIGN FILL	MEMBER THICKNESS				TOP SLAB BARS														BOTTOM SLAB BARS										WALL BARS				
					A1 BARS		J3 BARS					H1 BARS				H2 BARS				A2 BARS		J4 BARS					H3 BARS				B1 BARS		B2 BARS	
	TS	BS	TX	TI	SIZE	SPA.	SIZE	SPA.	C1	K2 HT=7′	K2 HT=8′	SIZE	SPA.	C5	O8	SIZE	SPA.	C6	O9	SIZE	SPA.	SIZE	SPA.	C4	K3 HT=7′	K3 HT=8′	SIZE	SPA.	C7	O10	SIZE	SPA.	SIZE	SPA.	G1
1 FT	11	8	8	8	4	6	4	9	33.9	27.0	27.0	4	22	56.5	42.5	4	22	23.0	23.0	4	11	4	7	48.0	88	100	4	8	46.0	31.0	5	12	5	12	12
2 FT	11	8	8	8	4	6	4	8.5	33.9	27.0	27.0	4	21	56.5	42.5	4	21	23.0	23.0	4	10.5	4	6.5	48.0	88	100	4	8	32.0	31.0	5	12	5	12	12
4 FT	8	8	8	8	4	9.5	4	7	33.9	24.0	24.0	4	20	56.5	46.0	4	20	21.0	21.0	4	11.5	4	6	48.0	88	100	4	8	31.0	30.0	5	12	5	12	12
6 FT	8	8	8	8	4	12	4	7	33.9	24.0	24.0	4	21	56.5	35.0	4	21	20.0	20.0	4	11	5	6	48.0	88	100	4	7.5	29.0	30.0	5	12	5	12	12
8 FT	8	8	8	8	4	12	4	6.5	51.8	24.0	24.0	4	20	34.0	31.0	4	20	19.0	20.0	4	10	5	6	46.0	88	100	4	7	28.0	29.0	5	12	5	12	0
10 FT	8	8	9	8	4	11	4	7	43.8	24.0	24.0	4	18	30.0	30.0	4	18	19.0	20.0	4	9	4	6	41.6	88	100	4	6.5	28.0	29.0	5	12	5	12	0
12 FT	8	8	9	8	4	9.5	4	6	41.3	24.0	24.0	4	16	29.0	30.0	4	16	19.0	19.0	4	8	5	6	40.4	88	100	4	6	27.0	29.0	5	12	5	12	0
14 FT	8	9	9	8	4	9	5	7	39.9	24.0	28.0	4	15	28.0	29.0	4	15	19.0	19.0	4	8	5	6.5	41.4	89	101	4	6.5	27.0	29.0	5	12	5	11.5	0
16 FT	8	9	9	8	4	8	5	6	39.1	24.0	28.0	4	13	28.0	29.0	4	13	19.0	19.0	4	7	5	6	40.8	89	101	4	6	27.0	29.0	5	12	5	11	0
18 FT	8	9	9	8	4	7.5	5	6	36.5	24.0	28.0	4	13	26.0	28.0	4	13	19.0	19.0	4	7	5	6	38.1	89	101	4	6	27.0	29.0	5	12	5	11.5	0
20 FT	8	9	9	8	4	7	6	7	39.1	24.0	32.0	5	18	26.0	28.0	5	18	19.0	19.0	4	6	6	7	40.9	89	101	5	7.5	27.0	29.0	5	12	5	10.5	0
22 FT	8	10	9	8	4	6.5	6	7	38.8	24.0	28.0	5	17	27.0	28.0	5	17	19.0	20.0	4	6.5	5	6	39.0	90	102	5	8	27.0	29.0	5	12	5	10	0
24 FT	9	11	9	8	4	6.5	5	6	37.0	25.0	29.0	5	18	26.0	28.0	5	18	19.0	19.0	4	6.5	5	6	39.8	91	103	4	6	27.0	29.0	5	12	5	9.5	0
26 FT	9	11	9	8	4	6	5	6	36.9	25.0	29.0	5	16	26.0	28.0	5	16	19.0	19.0	4	6	5	6	39.6	91	103	5	8.5	27.0	29.0	5	12	5	8.5	0
28 FT	10	12	9	8	4	6	5	6	37.9	30.0	30.0	5	17	26.0	28.0	5	17	19.0	19.0	4	6	5	6	40.3	92	104	4	6	27.0	29.0	5	12	5	8.5	0
30 FT	10	12	9	8	4	6	5	6	37.8	30.0	30.0	5	16	26.0	28.0	5	16	19.0	19.0	4	6	6	7.5	43.1	92	104	5	8.5	27.0	29.0	5	12	5	8.5	0
32 FT	11	12	10	8	4	6	5	6.5	38.4	31.0	31.0	5	17	26.0	28.0	5	17	18.0	19.0	5	9	5	6.5	39.6	92	104	5	8	27.0	29.0	5	12	5	8	0
34 FT	11	13	10	8	5	9	5	6.5	38.3	31.0	31.0	5	16	26.0	28.0	5	16	19.0	19.0	5	9	5	6.5	40.4	93	105	5	8.5	28.0	30.0	5	12	5	8	0
36 FT	12	13	10	8	5	9	5	6.5	39.1	32.0	32.0	5	17	26.0	28.0	5	17	18.0	19.0	5	8.5	5	6.5	40.3	93	105	5	8	27.0	30.0	5	12	5	8	0
38 FT	12	14	10	8	5	8.5	5	6	39.0	32.0	32.0	5	17	26.0	28.0	5	17	18.0	19.0	5	9	5	6.5	40.9	94	106	5	8.5	28.0	30.0	5	12	5	8	0
40 FT	12	14	11	8	5	8	5	7	38.9	32.0	32.0	5	16	26.0	28.0	5	16	18.0	19.0	5	8.5	5	7	40.8	94	106	5	8	28.0	30.0	5	12	5	7.5	0
42 FT	13	14	11	8	5	8.5	5	7	39.6	33.0	33.0	5	17	26.0	28.0	5	17	18.0	19.0	5	8	5	7	40.5	94	106	5	7.5	28.0	30.0	5	12	5	7.5	0
44 FT	13	15	11	8	5	8	5	6.5	39.5	33.0	33.0	5	16	26.0	28.0	5	16	18.0	19.0	5	8	5	7	41.3	95	107	5	8	28.0	30.0	5	12	5	7.5	0
46 FT	13	15	12	8	5	7.5	5	6.5	39.5	33.0	33.0	5	15	26.0	28.0	5	15	18.0	19.0	5	8	5	6.5	41.0	95	107	5	7.5	28.0	30.0	5	12	5	7	0
48 FT	14	15	12	8	5	8	5	6.5	40.3	34.0	34.0	5	17	26.0	27.0	5	17	18.0	19.0	5	7.5	5	6.5	40.9	95	107	5	7	28.0	30.0	5	12	5	7	0
50 FT	14	16	12	8	5	7.5	5	6.5	40.1	34.0	34.0	5	16	26.0	27.0	5	16	18.0	19.0	5	8	5	6.5	41.6	96	108	5	7.5	28.0	30.0	5	12	5	7	0

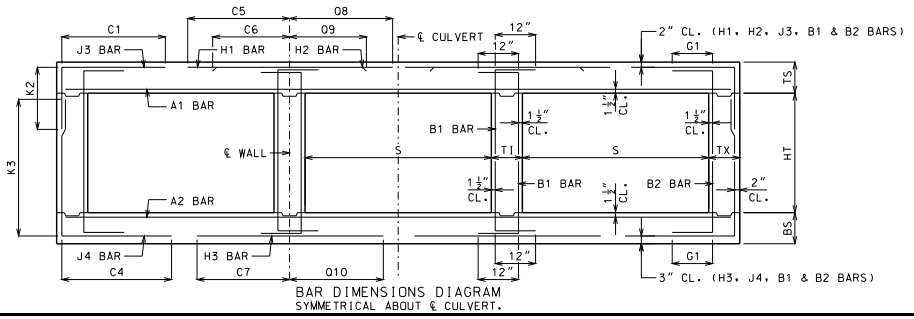

BAR DIMENSIONS DIAGRAM
SYMMETRICAL ABOUT ℄ CULVERT.

GENERAL NOTES:

IF DESIGN FILL IS BETWEEN TABULATED DESIGN FILLS, USE THE NEXT GREATER TABULATED DESIGN FILL, EXCEPT FOR DESIGN FILLS BETWEEN 2 FEET AND 4 FEET. FOR DESIGN FILLS BETWEEN 2 FEET AND 4 FEET USE THE GREATER MEMBER THICKNESS, AREA OF REINFORCEMENT AND BAR DIMENSIONS FROM THE 2 FEET AND 4 FEET TABULATED DESIGN FILLS. AREA OF REINFORCEMENT EQUALS BAR AREA PER FOOT SPACING.

SPECIAL DESIGNS ARE REQUIRED WHEN THE DESIGN FILL IS LESS THAN 1 FOOT OR GREATER THAN 50 FEET.

DIMENSIONS ARE IN INCHES UNLESS OTHERWISE SPECIFIED.

DESIGN FILLS ARE MEASURED FROM THE TOP OF TOP SLAB TO THE TOP OF EARTH FILL OR ROADWAY.

CULVERTS MEET STRENGTH AND SERVICEABILITY REQUIREMENTS FOR THE DESIGN VEHICULAR LIVE LOAD HL-93 MINUS THE LANE LOAD.

MISSOURI HIGHWAYS AND TRANSPORTATION COMMISSION
105 WEST CAPITOL
JEFFERSON CITY, MO 65102
1-888-ASK-MODOT (1-888-275-6636)

STATE OF MISSOURI — DENNIS W. HECKMAN — NUMBER PE-27141 — PROFESSIONAL ENGINEER
THIS SHEET HAS BEEN SIGNED, SEALED AND DATED ELECTRONICALLY.

CONCRETE TRIPLE BOX CULVERT

MEMBER THICKNESS
BAR SIZE, SPACING & DIMENSIONS

SPAN (S): 5 FEET
HEIGHT (HT): 7 THRU 8 FEET

DATE EFFECTIVE: 12/01/2011
DATE PREPARED: 9/29/2011

703.87

SHEET NO.
5 OF 27

IF A SEAL IS PRESENT ON THIS SHEET IT HAS BEEN ELECTRONICALLY SEALED AND DATED.

SPAN (S) = 6 FT HEIGHT (HT) = 3 FT OR 4 FT OR 5 FT

DESIGN FILL	MEMBER THICKNESS				TOP SLAB BARS															BOTTOM SLAB BARS												WALL BARS				
					A1 BARS		J3 BARS			K2			H1 BARS				H2 BARS				A2 BARS		J4 BARS			K3			H3 BARS				B1 BARS		B2 BARS		
	TS	BS	TX	TI	SIZE	SPA.	SIZE	SPA.	C1	HT=3′	HT=4′	HT=5′	SIZE	SPA.	C5	Q8	SIZE	SPA.	C6	Q9	SIZE	SPA.	SIZE	SPA.	C4	HT=3′	HT=4′	HT=5′	SIZE	SPA.	C7	Q10	SIZE	SPA.	SIZE	SPA.	G1
1 FT	11	8	8	8	5	8	4	9.5	37.5	27.0	27.0	27.0	4	17	64.5	48.5	4	17	24.0	23.0	4	10	4	10	38.1	40	52	64	4	7.5	33.0	34.0	5	12	5	12	12
2 FT	11	8	8	8	5	8	4	9.5	37.5	27.0	27.0	27.0	4	17	64.5	48.5	4	17	23.0	22.0	4	9.5	4	9	35.1	40	52	64	4	7	33.0	34.0	5	12	5	12	12
4 FT	8	8	8	8	4	7.5	4	8.5	35.8	24.0	24.0	24.0	4	14	43.0	52.0	4	14	21.0	21.0	4	9	4	9.5	32.1	40	52	64	4	6.5	32.0	33.0	5	12	5	12	12
6 FT	8	8	8	8	4	9	4	9.5	32.6	24.0	24.0	24.0	4	14	35.0	38.0	4	14	21.0	20.0	4	8.5	4	8.5	30.0	40	52	64	4	6	31.0	32.0	5	12	5	12	12
8 FT	8	8	8	8	4	9	4	9	30.4	24.0	24.0	24.0	4	13	33.0	35.0	4	13	20.0	20.0	4	8	4	8	29.0	40	52	64	5	7.5	30.0	32.0	5	12	5	12	0
10 FT	8	8	8	8	4	8	4	8	29.4	24.0	24.0	24.0	4	12	32.0	34.0	4	12	20.0	20.0	4	7	4	7	28.4	40	52	64	5	6.5	30.0	32.0	5	12	5	12	0
12 FT	8	9	8	8	4	7	4	7	28.8	24.0	24.0	24.0	5	17	31.0	33.0	5	17	20.0	20.0	4	6.5	4	9	27.4	41	53	65	5	7	30.0	32.0	5	12	5	12	0
14 FT	8	9	8	8	4	6.5	4	6.5	28.3	24.0	24.0	24.0	5	16	31.0	32.0	5	16	21.0	21.0	5	9	4	8	26.9	41	53	65	5	6.5	30.0	32.0	5	12	5	12	0
16 FT	9	10	8	8	4	6	4	7.5	27.6	25.0	25.0	25.0	5	16	30.0	33.0	5	16	20.0	20.0	5	9	4	9.5	26.5	42	54	66	5	7	29.0	32.0	5	12	5	12	0
18 FT	9	10	8	8	5	9	4	6.5	27.4	25.0	25.0	25.0	5	16	30.0	32.0	5	16	21.0	21.0	5	8	4	8.5	26.3	42	54	66	5	6.5	29.0	32.0	5	12	5	12	0
20 FT	10	11	8	8	5	9	4	7	27.0	26.0	26.0	26.0	5	15	30.0	33.0	5	15	20.0	20.0	5	8	4	8.5	26.0	43	55	67	5	7	29.0	33.0	5	12	5	12	0
22 FT	10	11	8	8	5	8.5	4	6.5	26.0	26.0	26.0	26.0	5	15	29.0	32.0	5	15	20.0	20.0	5	7.5	4	8.5	25.0	43	55	67	5	7	29.0	33.0	5	12	5	12	0
24 FT	11	12	8	8	5	8.5	4	6.5	25.8	27.0	27.0	27.0	5	15	29.0	32.0	5	15	20.0	20.0	5	8	4	8.5	24.9	44	56	68	5	7	29.0	33.0	5	12	5	12	0
26 FT	11	12	8	8	5	7.5	4	6	25.6	27.0	27.0	27.0	5	14	29.0	32.0	5	14	20.0	20.0	5	6.5	4	8	24.9	44	56	68	5	6.5	29.0	33.0	5	12	5	12	0
28 FT	12	13	8	8	5	7.5	4	6.5	25.5	28.0	28.0	28.0	5	14	29.0	32.0	5	14	19.0	20.0	5	7.5	4	8	24.9	45	57	69	5	7	29.0	33.0	5	12	5	12	0
30 FT	12	14	8	8	5	7	4	6	25.6	28.0	28.0	28.0	5	13	29.0	32.0	5	13	19.0	20.0	5	7.5	4	7.5	24.8	46	58	70	5	7	28.0	33.0	5	12	5	12	0
32 FT	13	14	8	8	5	7	4	6	25.4	29.0	29.0	29.0	5	14	28.0	33.0	5	14	19.0	20.0	5	7	4	7.5	24.9	46	58	70	5	6.5	28.0	33.0	5	12	5	12	0
34 FT	13	15	8	8	5	7	5	8.5	25.6	29.0	29.0	29.0	5	13	28.0	32.0	5	13	19.0	20.0	5	7	4	7	24.8	47	59	71	5	7	28.0	33.0	5	12	5	12	0
36 FT	14	15	8	8	5	7	4	6	25.4	30.0	30.0	30.0	5	13	28.0	33.0	5	13	19.0	20.0	5	6.5	4	7	25.0	47	59	71	5	6.5	28.0	33.0	5	12	5	12	0
38 FT	14	16	8	8	5	6.5	5	8.5	25.5	30.0	30.0	30.0	5	13	28.0	32.0	5	13	19.0	20.0	5	7	4	6.5	24.9	48	60	72	5	6.5	28.0	33.0	5	12	5	12	0
40 FT	15	16	8	8	5	6.5	5	8	30.4	31.0	31.0	31.0	5	13	33.0	38.0	5	13	24.0	25.0	5	6.5	4	6.5	25.1	48	60	72	5	6.5	28.0	33.0	5	12	5	12	0
42 FT	15	17	8	8	5	6.5	5	8	30.6	31.0	31.0	31.0	5	12	33.0	37.0	5	12	24.0	25.0	5	6.5	4	6	25.1	49	61	73	5	6.5	28.0	33.0	5	12	5	12	0
44 FT	16	17	8	8	5	6.5	5	7	30.5	32.0	32.0	32.0	5	13	33.0	37.0	5	13	24.0	25.0	5	6.5	4	6	25.3	49	61	73	5	6	28.0	33.0	5	12	5	12	0
46 FT	16	17	8	8	5	6	5	7	30.5	32.0	32.0	32.0	5	12	33.0	37.0	5	12	24.0	25.0	5	6	4	6	25.3	49	61	73	5	6	28.0	33.0	5	12	5	12	0
48 FT	17	18	8	8	5	6	5	6.5	30.6	37.0	37.0	37.0	5	13	33.0	37.0	5	13	24.0	25.0	5	6	5	6.5	25.5	50	62	74	5	6	28.0	33.0	5	12	5	11	0
50 FT	17	18	8	8	5	6	5	6.5	30.6	37.0	37.0	37.0	5	12	33.0	37.0	5	12	24.0	25.0	5	6	5	6.5	25.4	50	62	74	5	6	28.0	33.0	5	12	5	10.5	0

SPAN (S) = 6 FT HEIGHT (HT) = 6 FT OR 7 FT

DESIGN FILL	MEMBER THICKNESS				TOP SLAB BARS															BOTTOM SLAB BARS												WALL BARS				
					A1 BARS		J3 BARS			K2			H1 BARS				H2 BARS				A2 BARS		J4 BARS			K3			H3 BARS				B1 BARS		B2 BARS		
	TS	BS	TX	TI	SIZE	SPA.	SIZE	SPA.	C1	HT=6′	HT=7′		SIZE	SPA.	C5	Q8	SIZE	SPA.	C6	Q9	SIZE	SPA.	SIZE	SPA.	C4	HT=6′	HT=7′		SIZE	SPA.	C7	Q10	SIZE	SPA.	SIZE	SPA.	G1
1 FT	11	8	8	8	5	8	4	9.5	37.5	27.0	27.0		4	17	64.5	48.5	4	17	24.0	24.0	4	9.5	4	7.5	52.8	76	88		4	7	34.0	34.0	5	12	5	12	12
2 FT	11	8	8	8	5	8	4	9.5	37.5	27.0	27.0		4	17	64.5	48.5	4	17	23.0	23.0	4	8.5	4	7	47.3	76	88		4	6.5	33.0	34.0	5	12	5	12	12
4 FT	8	8	8	8	4	7	4	7	37.5	24.0	24.0		4	14	64.5	52.0	4	14	21.0	22.0	4	8.5	4	7	43.0	76	88		4	6.5	32.0	34.0	5	12	5	12	12
6 FT	8	8	8	8	4	8.5	4	7.5	41.9	24.0	24.0		4	14	37.0	39.0	4	14	21.0	21.0	4	8	4	6.5	39.1	76	88		4	6	31.0	33.0	5	12	5	12	12
8 FT	8	8	8	8	4	8.5	4	7	37.6	24.0	24.0		4	13	34.0	35.0	4	13	20.0	20.0	4	7.5	4	6	36.9	76	88		5	7	30.0	32.0	5	12	5	12	0
10 FT	8	8	8	8	4	8	4	6	36.0	24.0	24.0		4	12	32.0	34.0	4	12	20.0	20.0	4	6.5	5	6	35.4	76	88		5	6.5	30.0	32.0	5	12	5	12	0
12 FT	8	9	8	8	4	7	5	6.5	34.8	24.0	24.0		5	17	31.0	33.0	5	17	20.0	20.0	4	6.5	4	6	35.0	77	89		5	7	30.0	32.0	5	12	5	12	0
14 FT	8	9	8	8	4	6	5	6	33.9	24.0	28.0		5	16	31.0	33.0	5	16	21.0	21.0	5	8.5	5	6.5	34.1	77	89		5	6.5	30.0	32.0	5	12	5	12	0
16 FT	9	10	8	8	4	6	5	6.5	33.8	25.0	25.0		5	16	30.0	33.0	5	16	20.0	20.0	5	9	4	6	34.0	78	90		5	7	29.0	33.0	5	12	5	12	0
18 FT	9	10	8	8	5	9	5	6.5	33.4	25.0	29.0		5	16	30.0	32.0	5	16	21.0	21.0	5	8	5	6.5	33.6	78	90		5	6.5	29.0	32.0	5	12	5	12	0
20 FT	9	11	8	8	5	8	5	6	33.1	25.0	29.0		5	16	30.0	32.0	5	16	21.0	22.0	5	8	5	7	33.8	79	91		5	7.5	29.0	33.0	5	12	5	12	0
22 FT	10	11	8	8	5	8.5	5	7	31.6	26.0	30.0		5	15	29.0	32.0	5	15	20.0	20.0	5	7.5	5	7	31.9	79	91		5	7	29.0	33.0	5	12	5	12	0
24 FT	10	12	8	8	5	7.5	5	6.5	31.6	26.0	30.0		5	15	29.0	32.0	5	15	20.0	21.0	5	8	5	7.5	32.0	80	92		5	7	29.0	33.0	5	12	5	12	0
26 FT	11	13	8	8	5	8	5	6.5	31.9	27.0	31.0		5	14	29.0	32.0	5	14	20.0	20.0	5	8	5	7.5	32.3	81	93		5	7.5	29.0	33.0	5	12	5	11	0
28 FT	12	13	8	8	5	8	5	7	31.9	28.0	32.0		5	14	29.0	32.0	5	14	19.0	20.0	5	7.5	5	7	32.3	81	93		5	7	29.0	33.0	5	12	5	10	0
30 FT	12	14	8	8	5	7.5	5	6.5	32.0	28.0	32.0		5	13	29.0	32.0	5	13	19.0	20.0	5	7.5	5	7.5	32.4	82	94		5	7	29.0	33.0	5	12	5	9.5	0
32 FT	13	14	8	8	5	7.5	5	6.5	32.0	33.0	33.0		5	14	28.0	32.0	5	14	19.0	20.0	5	7	5	7	32.5	82	94		5	6.5	29.0	33.0	5	12	5	9.5	0
34 FT	13	15	8	8	5	7	5	6.5	32.1	33.0	33.0		5	13	28.0	32.0	5	13	19.0	20.0	5	7	5	7	32.6	83	95		5	7	29.0	33.0	5	12	5	9.5	0
36 FT	14	15	8	8	5	7	5	6	32.3	34.0	34.0		5	14	28.0	32.0	5	14	19.0	20.0	5	7	5	6.5	32.8	83	95		5	6.5	29.0	33.0	5	12	5	9.5	0
38 FT	14	16	9	8	5	6.5	5	7	32.9	30.0	34.0		5	13	28.0	32.0	5	13	19.0	20.0	5	7	5	8	33.1	84	96		5	6.5	29.0	33.0	5	12	5	8.5	0
40 FT	14	16	10	8	5	6	5	7.5	33.3	30.0	34.0		5	12	28.0	32.0	5	12	19.0	20.0	5	6.5	5	7.5	33.4	84	96		5	6.5	29.0	33.0	5	12	5	9.5	0
42 FT	15	17	10	8	5	6.5	5	7.5	38.5	31.0	35.0		5	13	33.0	37.0	5	13	24.0	25.0	5	7	5	7.5	33.6	85	97		5	6.5	29.0	33.0	5	12	5	9	0
44 FT	15	17	10	8	5	6.5	5	7.5	38.5	31.0	35.0		5	12	33.0	37.0	5	12	24.0	25.0	5	6.5	5	7.5	33.6	85	97		5	6	29.0	33.0	5	12	5	8.5	0
46 FT	16	17	10	8	5	6.5	5	7	38.6	32.0	36.0		5	13	33.0	36.0	5	13	24.0	25.0	5	6	5	7.5	33.8	85	97		5	6	29.0	33.0	5	12	5	8	0
48 FT	16	18	11	8	5	6	5	7	39.3	32.0	36.0		5	12	33.0	36.0	5	12	24.0	25.0	5	6.5	5	7.5	34.1	86	98		5	6	29.0	34.0	5	12	5	8.5	0
50 FT	17	18	11	8	5	6	5	7	39.4	33.0	37.0		5	13	33.0	36.0	5	13	24.0	25.0	5	6	5	7.5	34.3	86	98		5	6	29.0	33.0	5	12	5	8	0

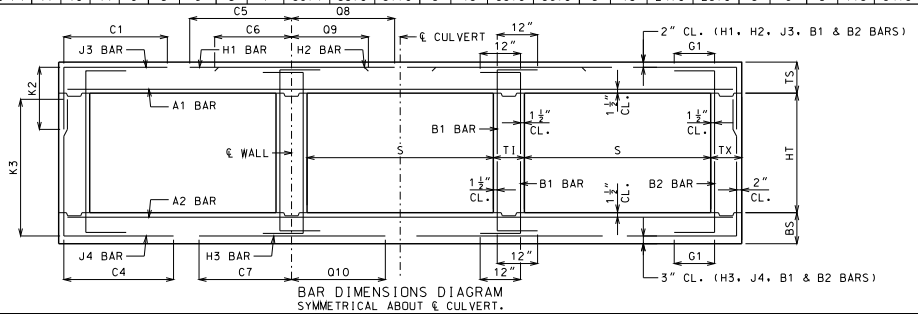

BAR DIMENSIONS DIAGRAM
SYMMETRICAL ABOUT ℄ CULVERT.

GENERAL NOTES:

IF DESIGN FILL IS BETWEEN TABULATED DESIGN FILLS, USE THE NEXT GREATER TABULATED DESIGN FILL, EXCEPT FOR DESIGN FILLS BETWEEN 2 FEET AND 4 FEET. FOR DESIGN FILLS BETWEEN 2 FEET AND 4 FEET USE THE GREATER MEMBER THICKNESS, AREA OF REINFORCEMENT AND BAR DIMENSIONS FROM THE 2 FEET AND 4 FEET TABULATED DESIGN FILLS. AREA OF REINFORCEMENT EQUALS BAR AREA PER FOOT SPACING.

SPECIAL DESIGNS ARE REQUIRED WHEN THE DESIGN FILL IS LESS THAN 1 FOOT OR GREATER THAN 50 FEET.

DIMENSIONS ARE IN INCHES UNLESS OTHERWISE SPECIFIED.

DESIGN FILLS ARE MEASURED FROM THE TOP OF TOP SLAB TO THE TOP OF EARTH FILL OR ROADWAY.

CULVERTS MEET STRENGTH AND SERVICEABILITY REQUIREMENTS FOR THE DESIGN VEHICULAR LIVE LOAD HL-93 MINUS THE LANE LOAD.

MISSOURI HIGHWAYS AND TRANSPORTATION COMMISSION
105 WEST CAPITOL
JEFFERSON CITY, MO 65102
1-888-ASK-MODOT (1-888-275-6636)

STATE OF MISSOURI
DENNIS W. HECKMAN
NUMBER PE-27141
PROFESSIONAL ENGINEER
THIS SHEET HAS BEEN SIGNED, SEALED AND DATED ELECTRONICALLY.

CONCRETE TRIPLE BOX CULVERT

MEMBER THICKNESS
BAR SIZE, SPACING & DIMENSIONS

SPAN (S): 6 FEET
HEIGHT (HT): 3 THRU 7 FEET

DATE EFFECTIVE: 12/01/2011
DATE PREPARED: 9/29/2011

703.87

SHEET NO.
6 OF 27

IF A SEAL IS PRESENT ON THIS SHEET IT HAS BEEN ELECTRONICALLY SEALED AND DATED.

SPAN (S) = 6 FT HEIGHT (HT) = 8 FT OR 9 FT

DESIGN FILL	MEMBER THICKNESS				TOP SLAB BARS														BOTTOM SLAB BARS										WALL BARS				
					A1 BARS		J3 BARS					H1 BARS				H2 BARS				A2 BARS		J4 BARS				H3 BARS				B1 BARS		B2 BARS	
	TS	BS	TX	TI	SIZE	SPA.	SIZE	SPA.	C1	K2 HT=8′	K2 HT=9′	SIZE	SPA.	C5	O8	SIZE	SPA.	C6	O9	SIZE	SPA.	SIZE	SPA.	C4	K3 HT=8′	K3 HT=9′	SIZE	SPA.	C7	O10	SIZE	SPA.	SIZE	SPA.	G1
1 FT	11	8	8	8	5	7.5	4	7	37.5	27.0	27.0	4	17	64.5	48.5	4	17	24.0	25.0	4	8.5	5	6.5	54.0	100	112	4	7	52.0	35.0	5	12	5	12	12
2 FT	11	8	8	8	5	7.5	4	6.5	37.5	27.0	27.0	4	17	64.5	48.5	4	17	23.0	24.0	4	8	5	6	54.0	100	112	4	6.5	35.0	34.0	5	12	5	12	12
4 FT	8	8	9	8	4	7	4	6	38.1	24.0	24.0	4	14	64.5	52.0	4	14	22.0	22.0	4	8	5	6.5	54.8	100	112	4	6	33.0	34.0	5	12	5	12	12
6 FT	8	8	9	8	4	8.5	4	6	38.1	24.0	24.0	4	14	64.5	40.0	4	14	21.0	21.0	4	8	5	6	50.8	100	112	4	6	32.0	33.0	5	12	5	12	12
8 FT	8	9	9	8	4	8.5	4	6	50.1	24.0	24.0	4	14	35.0	35.0	4	14	20.0	20.0	4	8.5	5	6.5	50.8	101	113	4	6.5	31.0	33.0	5	12	5	12	0
10 FT	8	9	9	8	4	8	5	6.5	45.8	24.0	28.0	4	12	33.0	33.0	4	12	20.0	20.0	4	7.5	5	6	47.5	101	113	4	6	31.0	33.0	5	12	5	11	0
12 FT	8	9	10	8	4	7	5	6.5	43.0	24.0	28.0	5	17	32.0	33.0	5	17	20.0	20.0	4	6.5	5	6.5	44.8	101	113	5	7	30.0	32.0	5	12	5	11	0
14 FT	8	9	10	8	4	6.5	5	6	41.6	28.0	28.0	5	17	31.0	32.0	5	17	21.0	21.0	4	6	5	6	43.5	101	113	5	6.5	30.0	32.0	5	12	5	10	0
16 FT	8	10	10	8	4	6	6	7	43.3	28.0	28.0	5	16	30.0	32.0	5	16	22.0	22.0	5	9	5	6	44.4	102	114	5	7	30.0	33.0	5	12	5	9.5	0
18 FT	9	10	10	8	4	6	5	6	41.8	29.0	29.0	5	16	30.0	32.0	5	16	20.0	21.0	5	8.5	6	7.5	46.4	102	114	5	7	30.0	32.0	5	12	5	9	0
20 FT	9	11	10	8	5	8.5	5	6	41.0	29.0	29.0	5	16	30.0	32.0	5	16	21.0	22.0	5	8.5	5	6	44.4	103	115	5	7	30.0	33.0	5	12	5	8.5	0
22 FT	10	11	10	8	5	9	5	6.5	39.9	30.0	30.0	5	15	29.0	32.0	5	15	20.0	20.0	5	8	5	6	41.4	103	115	5	7	30.0	33.0	5	12	5	9	0
24 FT	10	12	10	8	5	8	5	6.5	39.5	30.0	30.0	5	15	29.0	32.0	5	15	20.0	21.0	5	8	5	6	42.3	104	116	5	7	30.0	33.0	5	12	5	8.5	0
26 FT	11	12	10	8	5	8	5	6	40.5	31.0	31.0	5	14	29.0	32.0	5	14	19.0	20.0	5	7	5	6	41.9	104	116	5	6.5	30.0	33.0	5	12	5	8	0
28 FT	11	13	10	8	5	7.5	5	6	40.3	31.0	31.0	5	14	29.0	32.0	5	14	20.0	20.0	5	7.5	5	6	42.8	105	117	5	7	30.0	33.0	5	12	5	8	0
30 FT	12	14	10	8	5	8	5	6	41.0	32.0	32.0	5	14	29.0	31.0	5	14	19.0	20.0	5	8	5	6	43.3	106	118	5	7	30.0	33.0	5	12	5	8	0
32 FT	12	14	11	8	5	7.5	5	6.5	40.8	32.0	32.0	5	13	29.0	31.0	5	13	19.0	20.0	5	7.5	5	7	42.9	106	118	5	6.5	30.0	33.0	5	12	5	7.5	0
34 FT	13	15	11	8	5	7.5	5	6.5	41.5	33.0	33.0	5	13	28.0	31.0	5	13	19.0	20.0	5	7.5	5	7	43.5	107	119	5	7	30.0	33.0	5	12	5	7.5	0
36 FT	13	15	11	8	5	7	5	6	41.4	33.0	33.0	5	13	28.0	31.0	5	13	19.0	20.0	5	7	5	6.5	43.4	107	119	5	6.5	30.0	33.0	5	12	5	7.5	0
38 FT	14	16	12	8	5	7	5	6.5	42.1	34.0	34.0	5	13	28.0	31.0	5	13	19.0	20.0	5	7	5	6.5	43.8	108	120	5	6.5	30.0	33.0	5	12	5	7	0
40 FT	14	16	12	8	5	7	5	6	42.0	34.0	34.0	5	13	28.0	31.0	5	13	19.0	20.0	5	7	5	6.5	43.6	108	120	5	6.5	30.0	33.0	5	12	5	7	0
42 FT	15	17	12	8	5	7	5	6	47.6	35.0	35.0	5	13	33.0	36.0	5	13	24.0	25.0	5	7	5	6.5	44.3	109	121	5	6.5	30.0	33.0	5	12	5	7	0
44 FT	15	17	13	8	5	6.5	5	6	47.6	35.0	35.0	5	13	33.0	36.0	5	13	24.0	25.0	5	6.5	5	6	44.0	109	121	5	6	30.0	33.0	5	12	5	6.5	0
46 FT	15	17	13	8	5	6	5	6	47.6	35.0	35.0	5	12	33.0	36.0	5	12	24.0	25.0	5	6	5	6	43.9	109	121	5	6	30.0	33.0	5	12	5	6.5	0
48 FT	16	18	13	8	5	6.5	5	6	48.3	36.0	36.0	5	13	33.0	35.0	5	13	24.0	25.0	5	6.5	5	6	44.5	110	122	5	6	30.0	33.0	5	12	5	6.5	0
50 FT	16	18	14	8	5	6	5	6	48.3	36.0	36.0	5	12	33.0	35.0	5	12	24.0	25.0	5	6	5	6	44.3	110	122	6	8.5	32.0	37.0	5	12	5	6.5	0

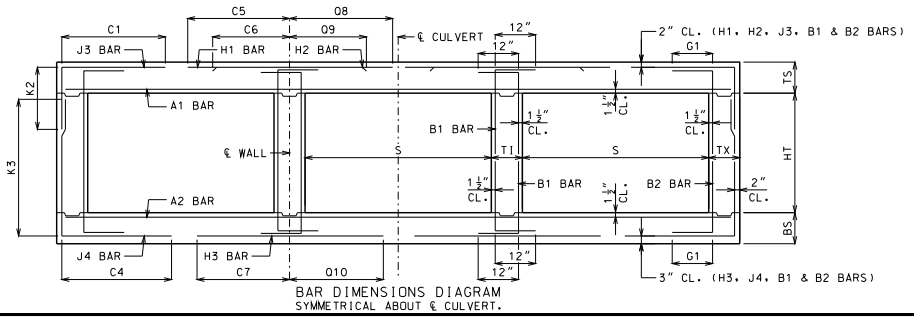

BAR DIMENSIONS DIAGRAM
SYMMETRICAL ABOUT ℄ CULVERT.

GENERAL NOTES:

IF DESIGN FILL IS BETWEEN TABULATED DESIGN FILLS, USE THE NEXT GREATER TABULATED DESIGN FILL, EXCEPT FOR DESIGN FILLS BETWEEN 2 FEET AND 4 FEET. FOR DESIGN FILLS BETWEEN 2 FEET AND 4 FEET USE THE GREATER MEMBER THICKNESS, AREA OF REINFORCEMENT AND BAR DIMENSIONS FROM THE 2 FEET AND 4 FEET TABULATED DESIGN FILLS. AREA OF REINFORCEMENT EQUALS BAR AREA PER FOOT SPACING.

SPECIAL DESIGNS ARE REQUIRED WHEN THE DESIGN FILL IS LESS THAN 1 FOOT OR GREATER THAN 50 FEET.

DIMENSIONS ARE IN INCHES UNLESS OTHERWISE SPECIFIED.

DESIGN FILLS ARE MEASURED FROM THE TOP OF TOP SLAB TO THE TOP OF EARTH FILL OR ROADWAY.

CULVERTS MEET STRENGTH AND SERVICEABILITY REQUIREMENTS FOR THE DESIGN VEHICULAR LIVE LOAD HL-93 MINUS THE LANE LOAD.

MISSOURI HIGHWAYS AND TRANSPORTATION COMMISSION
105 WEST CAPITOL
JEFFERSON CITY, MO 65102
1-888-ASK-MODOT (1-888-275-6636)

STATE OF MISSOURI
DENNIS W. HECKMAN
NUMBER PE-27141
PROFESSIONAL ENGINEER
THIS SHEET HAS BEEN SIGNED, SEALED AND DATED ELECTRONICALLY.

CONCRETE TRIPLE BOX CULVERT

MEMBER THICKNESS
BAR SIZE, SPACING & DIMENSIONS

SPAN (S): 6 FEET
HEIGHT (HT): 8 THRU 9 FEET

DATE EFFECTIVE: 12/01/2011
DATE PREPARED: 9/29/2011

703.87

SHEET NO.
7 OF 27

IF A SEAL IS PRESENT ON THIS SHEET IT HAS BEEN ELECTRONICALLY SEALED AND DATED.

SPAN (S) = 7 FT HEIGHT (HT) = 4 FT OR 5 FT OR 6 FT

DESIGN FILL	MEMBER THICKNESS				TOP SLAB BARS														BOTTOM SLAB BARS												WALL BARS				
					A1 BARS		J3 BARS			K2			H1 BARS				H2 BARS				A2 BARS		J4 BARS			K3			H3 BARS				B1 BARS		B2 BARS		
	TS	BS	TX	TI	SIZE	SPA.	SIZE	SPA.	C1	HT=4′	HT=5′	HT=6′	SIZE	SPA.	C5	Q8	SIZE	SPA.	C6	Q9	SIZE	SPA.	SIZE	SPA.	C4	HT=4′	HT=5′	HT=6′	SIZE	SPA.	C7	Q10	SIZE	SPA.	SIZE	SPA.	G1
1 FT	12	8	8	8	5	7.5	4	8.5	41.1	28.0	28.0	28.0	4	16	72.5	54.5	4	16	25.0	25.0	4	8.5	4	7.5	42.5	52	64	76	4	6	36.0	37.0	5	12	5	12	12
2 FT	12	8	8	8	5	7.5	4	8.5	41.1	28.0	28.0	28.0	4	15	72.5	54.5	4	15	24.0	24.0	4	7.5	4	7	39.0	52	64	76	5	7.5	35.0	37.0	5	12	5	12	12
4 FT	8	8	8	8	4	6	4	6.5	39.5	24.0	24.0	24.0	5	17	47.0	58.0	5	17	23.0	23.0	4	7	4	7	36.0	52	64	76	5	7	35.0	37.0	5	12	5	12	12
6 FT	8	8	8	8	4	6.5	4	7	36.0	24.0	24.0	24.0	5	17	38.0	42.0	5	17	22.0	22.0	4	6.5	4	6.5	33.4	52	64	76	5	6.5	34.0	36.0	5	12	5	12	12
8 FT	8	8	8	8	4	6.5	4	6.5	33.5	24.0	24.0	24.0	5	17	36.0	38.0	5	17	23.0	22.0	5	9	4	6	32.0	52	64	76	5	6	33.0	35.0	5	12	5	12	0
10 FT	8	9	8	8	4	6	5	7	32.3	24.0	24.0	24.0	5	16	35.0	37.0	5	16	23.0	23.0	5	9	4	7	30.9	53	65	77	5	6.5	33.0	35.0	5	12	5	12	0
12 FT	8	9	8	8	4	6	5	6	31.4	24.0	24.0	24.0	5	14	34.0	36.0	5	14	23.0	23.0	5	7.5	4	6	30.1	53	65	77	5	6	32.0	35.0	5	12	5	12	0
14 FT	9	10	8	8	5	8.5	4	6	30.5	25.0	25.0	25.0	5	15	33.0	36.0	5	15	23.0	23.0	5	7.5	4	7	29.5	54	66	78	5	6	32.0	36.0	5	12	5	12	0
16 FT	10	11	8	8	5	8	5	8	29.9	26.0	26.0	26.0	5	15	33.0	36.0	5	15	22.0	22.0	5	7.5	4	7	29.0	55	67	79	5	6.5	32.0	36.0	5	12	5	12	0
18 FT	10	11	8	8	5	8	5	7.5	29.5	26.0	26.0	26.0	5	15	33.0	36.0	5	15	23.0	24.0	5	6	4	6.5	28.6	55	67	79	5	6	32.0	36.0	5	12	5	12	0
20 FT	11	12	8	8	5	7.5	5	8.5	29.1	27.0	27.0	27.0	5	14	32.0	36.0	5	14	22.0	23.0	5	6.5	4	6.5	28.4	56	68	80	5	6	31.0	36.0	5	12	5	12	0
22 FT	12	13	8	8	5	7	5	8.5	28.9	28.0	28.0	28.0	5	13	32.0	36.0	5	13	21.0	22.0	5	6.5	4	6	28.3	57	69	81	5	6	31.0	36.0	5	12	5	12	0
24 FT	12	13	8	8	5	7	5	8.5	27.6	28.0	28.0	28.0	5	13	31.0	36.0	5	13	21.0	22.0	5	6	4	6	27.1	57	69	81	6	8	34.0	39.0	5	12	5	12	0
26 FT	13	14	8	8	5	6.5	5	8.5	27.5	29.0	29.0	29.0	5	12	31.0	36.0	5	12	20.0	21.0	5	6.5	4	6	27.1	58	70	82	5	6	31.0	36.0	5	12	5	12	0
28 FT	13	15	8	8	5	6.5	5	8.5	27.6	29.0	29.0	29.0	5	12	31.0	36.0	5	12	21.0	22.0	5	6.5	4	6.5	27.0	59	71	83	5	6	31.0	37.0	5	12	5	12	0
30 FT	14	15	8	8	5	6	5	8.5	27.5	30.0	30.0	34.0	5	12	31.0	36.0	5	12	20.0	21.0	5	6	5	8.5	27.1	59	71	83	6	8	34.0	39.0	5	12	5	12	0
32 FT	15	16	8	8	5	6	5	8	32.5	31.0	31.0	35.0	6	17	39.0	45.0	6	17	29.0	30.0	5	6	5	8	27.3	60	72	84	6	8	34.0	40.0	5	12	5	12	0
34 FT	15	17	8	8	5	6	5	8	32.6	31.0	31.0	31.0	6	16	39.0	45.0	6	16	29.0	30.0	5	6	4	6	27.3	61	73	85	6	8.5	34.0	40.0	5	12	5	11.5	0
36 FT	16	17	8	8	5	6	5	7	32.5	32.0	32.0	36.0	6	16	39.0	45.0	6	16	29.0	30.0	6	8.5	5	7	27.4	61	73	85	6	8	34.0	40.0	5	12	5	11	0
38 FT	16	18	8	8	6	8	5	7	32.6	32.0	36.0	36.0	6	15	39.0	45.0	6	15	29.0	30.0	5	6	5	6.5	27.4	62	74	86	6	8	34.0	40.0	5	12	5	10	0
40 FT	17	18	8	8	6	8	5	6.5	32.6	37.0	37.0	37.0	6	16	39.0	45.0	6	16	29.0	30.0	6	8	5	6.5	27.6	62	74	86	6	7.5	34.0	40.0	5	12	5	9.5	0
42 FT	17	19	8	8	6	7.5	5	6.5	32.8	37.0	37.0	37.0	6	15	39.0	45.0	6	15	29.0	30.0	6	8	5	6.5	27.6	63	75	87	6	8	34.0	40.0	5	12	5	9.5	0
44 FT	18	19	8	8	6	7.5	5	6.5	32.6	38.0	38.0	38.0	6	15	39.0	45.0	6	15	29.0	30.0	6	7.5	5	6.5	27.8	63	75	87	6	7.5	34.0	40.0	5	12	5	9.5	0
46 FT	18	20	8	8	6	7.5	5	6.5	32.8	38.0	38.0	38.0	6	15	39.0	44.0	6	15	29.0	30.0	6	8	5	6	27.8	64	76	88	6	7.5	34.0	40.0	5	12	5	9.5	0
48 FT	19	20	8	8	6	7.5	5	6	32.8	39.0	39.0	39.0	6	15	39.0	44.0	6	15	29.0	30.0	6	7.5	5	6	27.9	64	76	88	6	7	34.0	40.0	5	12	5	9.5	0
50 FT	19	21	8	8	6	7	5	6	32.9	39.0	39.0	39.0	6	14	39.0	44.0	6	14	29.0	30.0	6	7.5	6	7.5	31.0	65	77	89	6	7.5	34.0	40.0	5	12	5	9	0

SPAN (S) = 7 FT HEIGHT (HT) = 7 FT OR 8 FT

DESIGN FILL	MEMBER THICKNESS				TOP SLAB BARS														BOTTOM SLAB BARS												WALL BARS				
					A1 BARS		J3 BARS			K2			H1 BARS				H2 BARS				A2 BARS		J4 BARS			K3			H3 BARS				B1 BARS		B2 BARS		
	TS	BS	TX	TI	SIZE	SPA.	SIZE	SPA.	C1	HT=7′	HT=8′	SIZE	SPA.	C5	Q8	SIZE	SPA.	C6	Q9	SIZE	SPA.	SIZE	SPA.	C4	HT=7′	HT=8′	SIZE	SPA.	C7	Q10	SIZE	SPA.	SIZE	SPA.	G1
1 FT	12	8	8	8	5	7.5	4	8	41.1	28.0	28.0	4	16	72.5	54.5	4	16	25.0	26.0	4	8	4	6	57.4	88	100	4	6	37.0	37.0	5	12	5	12	12
2 FT	12	8	8	8	5	7.5	4	7.5	41.1	28.0	28.0	4	15	72.5	54.5	4	15	25.0	25.0	4	7	5	6.5	51.3	88	100	5	7	36.0	37.0	5	12	5	12	12
4 FT	8	8	9	8	4	6	4	6	41.8	24.0	24.0	5	17	73.5	58.0	5	17	23.0	23.0	4	7	4	6.5	45.9	88	100	5	7	35.0	37.0	5	12	5	12	12
6 FT	8	8	9	8	4	6.5	4	6	44.3	24.0	24.0	5	17	40.0	43.0	5	17	22.0	22.0	4	6.5	5	6.5	41.8	88	100	5	6.5	34.0	36.0	5	12	5	12	12
8 FT	8	8	9	8	4	6.5	4	6	40.9	24.0	24.0	5	17	37.0	38.0	5	17	22.0	23.0	5	9	5	6	39.9	88	100	5	6	33.0	35.0	5	12	5	12	0
10 FT	8	9	9	8	4	6	5	6.5	39.1	24.0	28.0	5	16	35.0	37.0	5	16	23.0	23.0	5	9	5	7	39.4	89	101	5	6.5	33.0	36.0	5	12	5	12	0
12 FT	8	9	9	8	4	6	6	7	41.0	24.0	28.0	5	15	34.0	36.0	5	15	23.0	24.0	5	7	5	6	38.3	89	101	5	6	32.0	35.0	5	12	5	12	0
14 FT	9	10	9	8	5	8.5	5	6	37.8	25.0	29.0	5	15	34.0	36.0	5	15	23.0	23.0	5	7.5	5	6.5	37.9	90	102	5	6	32.0	36.0	5	12	5	12	0
16 FT	10	11	9	8	5	8	5	7	37.4	26.0	30.0	5	15	33.0	36.0	5	15	22.0	22.0	5	7.5	5	7	37.6	91	103	5	6.5	32.0	36.0	5	12	5	12	0
18 FT	10	11	9	8	5	8	5	6.5	36.8	30.0	30.0	5	15	33.0	36.0	5	15	23.0	23.0	5	6	5	6.5	36.9	91	103	5	6	32.0	36.0	5	12	5	12	0
20 FT	11	12	9	8	5	7.5	5	6.5	36.8	31.0	31.0	5	14	32.0	36.0	5	14	21.0	22.0	5	7	5	6.5	37.0	92	104	5	6	32.0	36.0	5	12	5	11	0
22 FT	11	13	9	8	5	7	5	6	36.5	31.0	31.0	5	14	32.0	35.0	5	14	22.0	23.0	5	7	5	7	37.0	93	105	5	6	32.0	36.0	5	12	5	10	0
24 FT	12	13	9	8	5	7	5	7	34.8	32.0	32.0	5	13	31.0	35.0	5	13	21.0	22.0	5	6	5	7	35.0	93	105	6	8	34.0	39.0	5	12	5	10.5	0
26 FT	13	14	9	8	5	7	5	7	34.9	33.0	33.0	5	12	31.0	35.0	5	12	20.0	21.0	5	6.5	5	7.5	35.3	94	106	5	6	31.0	36.0	5	12	5	9.5	0
28 FT	13	15	9	8	5	6.5	5	6.5	34.9	33.0	33.0	5	12	31.0	35.0	5	12	21.0	22.0	5	6.5	5	7.5	35.4	95	107	5	6	31.0	36.0	5	12	5	9	0
30 FT	14	15	9	8	5	6.5	5	7	35.0	34.0	34.0	5	12	31.0	35.0	5	12	20.0	21.0	5	6	5	7	35.4	95	107	6	8	34.0	39.0	5	12	5	8.5	0
32 FT	14	16	9	8	5	6	5	6	35.0	34.0	34.0	5	12	31.0	35.0	5	12	20.0	21.0	5	6	5	7	35.5	96	108	6	8	35.0	39.0	5	12	5	8.5	0
34 FT	15	17	10	8	5	6	5	7	40.8	35.0	35.0	6	16	40.0	44.0	6	16	29.0	30.0	5	6	5	7.5	36.0	97	109	6	8.5	35.0	40.0	5	12	5	8.5	0
36 FT	16	17	10	8	5	6	5	7	40.8	36.0	36.0	6	17	39.0	44.0	6	17	29.0	30.0	5	6	5	7.5	36.0	97	109	6	8	35.0	40.0	5	12	5	8	0
38 FT	16	18	11	8	5	6	5	7	41.5	36.0	36.0	6	16	39.0	44.0	6	16	29.0	30.0	5	6	5	7	36.5	98	110	6	8	35.0	40.0	5	12	5	8.5	0
40 FT	17	18	11	8	5	6	5	7	41.5	37.0	37.0	6	16	39.0	43.0	6	16	29.0	30.0	6	8	5	7	36.5	98	110	6	7.5	35.0	40.0	5	12	5	8	0
42 FT	17	19	11	8	6	8	5	6.5	41.6	37.0	37.0	6	16	39.0	43.0	6	16	29.0	30.0	6	8.5	5	7	36.8	99	111	6	7.5	35.0	40.0	5	12	5	7.5	0
44 FT	18	19	12	8	6	8	5	6.5	42.3	38.0	38.0	6	16	39.0	43.0	6	16	29.0	29.0	6	8	5	6.5	37.0	99	111	6	7.5	35.0	40.0	5	12	5	8	0
46 FT	18	20	12	8	6	8	5	6.5	42.4	38.0	38.0	6	15	39.0	43.0	6	15	29.0	29.0	6	8	5	6.5	37.1	100	112	6	7.5	35.0	40.0	5	12	5	7.5	0
48 FT	18	20	12	8	6	7.5	5	6.5	42.4	38.0	38.0	6	15	39.0	43.0	6	15	29.0	29.0	6	7.5	5	6.5	37.1	100	112	6	7	35.0	40.0	5	12	5	7.5	0
50 FT	19	21	12	8	6	7.5	5	6	42.5	39.0	39.0	6	15	39.0	43.0	6	15	28.0	29.0	6	8	5	6.5	37.5	101	113	6	7.5	35.0	40.0	5	12	5	7	0

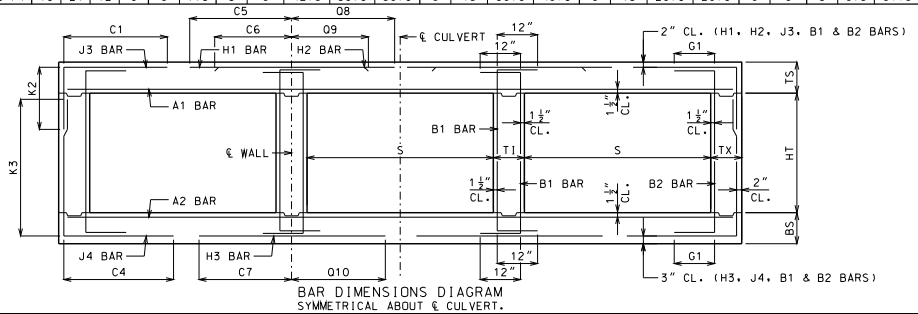

BAR DIMENSIONS DIAGRAM
SYMMETRICAL ABOUT ℄ CULVERT.

GENERAL NOTES:

IF DESIGN FILL IS BETWEEN TABULATED DESIGN FILLS, USE THE NEXT GREATER TABULATED DESIGN FILL, EXCEPT FOR DESIGN FILLS BETWEEN 2 FEET AND 4 FEET. FOR DESIGN FILLS BETWEEN 2 FEET AND 4 FEET USE THE GREATER MEMBER THICKNESS, AREA OF REINFORCEMENT AND BAR DIMENSIONS FROM THE 2 FEET AND 4 FEET TABULATED DESIGN FILLS. AREA OF REINFORCEMENT EQUALS BAR AREA PER FOOT SPACING.

SPECIAL DESIGNS ARE REQUIRED WHEN THE DESIGN FILL IS LESS THAN 1 FOOT OR GREATER THAN 50 FEET.

DIMENSIONS ARE IN INCHES UNLESS OTHERWISE SPECIFIED.

DESIGN FILLS ARE MEASURED FROM THE TOP OF TOP SLAB TO THE TOP OF EARTH FILL OR ROADWAY.

CULVERTS MEET STRENGTH AND SERVICEABILITY REQUIREMENTS FOR THE DESIGN VEHICULAR LIVE LOAD HL-93 MINUS THE LANE LOAD.

MISSOURI HIGHWAYS AND TRANSPORTATION COMMISSION
105 WEST CAPITOL
JEFFERSON CITY, MO 65102
1-888-ASK-MODOT (1-888-275-6636)

STATE OF MISSOURI
DENNIS W. HECKMAN
NUMBER PE-27141
PROFESSIONAL ENGINEER
THIS SHEET HAS BEEN SIGNED, SEALED AND DATED ELECTRONICALLY.

CONCRETE TRIPLE BOX CULVERT

MEMBER THICKNESS
BAR SIZE, SPACING & DIMENSIONS

SPAN (S): 7 FEET
HEIGHT (HT): 4 THRU 8 FEET

DATE EFFECTIVE: 12/01/2011
DATE PREPARED: 9/29/2011

703.87

SHEET NO.
8 OF 27

IF A SEAL IS PRESENT ON THIS SHEET IT HAS BEEN ELECTRONICALLY SEALED AND DATED.

SPAN (S) = 7 FT HEIGHT (HT) = 9 FT OR 10 FT

DESIGN FILL	MEMBER THICKNESS				TOP SLAB BARS														BOTTOM SLAB BARS										WALL BARS				
					A1 BARS		J3 BARS					H1 BARS				H2 BARS				A2 BARS		J4 BARS					H3 BARS				B1 BARS		B2 BARS	
	TS	BS	TX	TI	SIZE	SPA.	SIZE	SPA.	C1	K2 HT=9′	K2 HT=10′	SIZE	SPA.	C5	O8	SIZE	SPA.	C6	O9	SIZE	SPA.	SIZE	SPA.	C4	K3 HT=9′	K3 HT=10′	SIZE	SPA.	C7	O10	SIZE	SPA.	SIZE	SPA.	G1
1 FT	12	9	8	8	5	7.5	5	9	41.1	28.0	32.0	4	16	72.5	54.5	4	16	26.0	27.0	4	8	5	6	60.0	113	125	4	7	58.0	38.0	5	12	5	12	12
2 FT	12	9	8	8	5	7	5	8.5	41.1	28.0	32.0	4	15	72.5	54.5	4	15	25.0	26.0	4	7.5	6	7	63.0	113	125	4	6.5	39.0	38.0	5	12	5	12	12
4 FT	8	9	9	8	4	6	5	6	44.8	24.0	28.0	5	17	75.5	58.0	5	17	23.0	23.0	4	7	5	6	60.8	113	125	4	6	37.0	38.0	5	12	5	11	12
6 FT	8	9	10	8	4	6.5	5	6.5	59.1	24.0	28.0	5	17	45.0	43.0	5	17	22.0	22.0	4	7	5	6.5	56.3	113	125	5	7.5	34.0	37.0	5	12	5	11	12
8 FT	8	9	10	8	4	6.5	5	6.5	50.8	28.0	28.0	5	17	38.0	38.0	5	17	22.0	22.0	4	6.5	5	6	51.8	113	125	5	7	33.0	36.0	5	12	5	10.5	0
10 FT	8	9	10	8	4	6	6	7.5	50.9	28.0	32.0	5	16	36.0	37.0	5	16	23.0	23.0	5	9	6	6.5	52.6	113	125	5	6	33.0	36.0	5	12	5	9.5	0
12 FT	8	10	10	8	4	6	6	6.5	48.5	28.0	32.0	5	15	35.0	36.0	5	15	23.0	24.0	5	8.5	6	7	53.1	114	126	5	6.5	33.0	36.0	5	12	5	9	0
14 FT	9	10	10	8	5	8.5	5	6	46.4	29.0	29.0	5	16	34.0	36.0	5	16	23.0	23.0	5	8	6	7	51.3	114	126	5	6	33.0	36.0	5	12	5	8.5	0
16 FT	9	11	10	8	5	8	5	6	44.8	29.0	29.0	5	15	33.0	35.0	5	15	23.0	24.0	5	7.5	6	7	51.8	115	127	5	6	33.0	36.0	5	12	5	8	0
18 FT	10	12	10	8	5	8	5	6.5	45.3	30.0	30.0	5	15	33.0	35.0	5	15	22.0	23.0	5	7.5	6	7	51.8	116	128	5	6.5	33.0	36.0	5	12	5	8	0
20 FT	11	12	10	8	5	7.5	5	6	46.1	31.0	31.0	5	14	33.0	35.0	5	14	21.0	22.0	5	7	6	6.5	50.8	116	128	5	6	33.0	36.0	5	12	5	8	0
22 FT	11	13	10	8	5	7.5	5	6	45.4	31.0	31.0	5	14	32.0	35.0	5	14	22.0	23.0	5	7	6	6.5	51.4	117	129	5	6	33.0	36.0	5	12	5	8	0
24 FT	12	13	10	8	5	7	5	6	43.4	32.0	32.0	5	13	31.0	35.0	5	13	21.0	22.0	5	6	6	6.5	48.0	117	129	6	8	35.0	39.0	5	12	5	8	0
26 FT	12	14	10	8	5	7	6	7.5	46.1	32.0	36.0	5	13	31.0	35.0	5	13	21.0	22.0	5	6.5	6	7	48.6	118	130	6	8.5	35.0	39.0	5	12	5	8	0
28 FT	13	15	11	8	5	6.5	5	6	43.6	33.0	33.0	5	12	31.0	35.0	5	12	20.0	21.0	5	6.5	5	6.5	45.9	119	131	5	6	32.0	36.0	5	12	5	7.5	0
30 FT	14	15	11	8	5	6.5	5	6	44.3	34.0	34.0	5	12	31.0	35.0	5	12	20.0	21.0	5	6	5	6	45.5	119	131	6	8	35.0	39.0	5	12	5	7.5	0
32 FT	14	16	12	8	5	6.5	5	6	44.1	34.0	34.0	5	12	31.0	34.0	5	12	20.0	21.0	5	6.5	5	6	45.9	120	132	6	8	35.0	40.0	5	12	5	7	0
34 FT	15	17	12	8	5	6.5	5	6	49.6	35.0	35.0	6	17	40.0	43.0	6	17	29.0	30.0	5	6.5	5	6.5	46.5	121	133	6	8	36.0	40.0	5	12	5	7	0
36 FT	15	17	13	8	5	6	5	6	49.6	35.0	35.0	6	16	40.0	43.0	6	16	29.0	30.0	5	6	5	6	46.0	121	133	6	7.5	35.0	40.0	5	12	5	6.5	0
38 FT	16	18	13	8	5	6	6	8.5	54.1	36.0	36.0	6	16	40.0	43.0	6	16	29.0	29.0	5	6	5	6	46.6	122	134	6	8	36.0	40.0	5	12	5	6.5	0
40 FT	16	18	13	8	6	8.5	6	8	54.0	36.0	36.0	6	15	40.0	43.0	6	15	29.0	30.0	5	6	5	6	46.5	122	134	6	7.5	36.0	40.0	5	12	5	6.5	0
42 FT	17	19	14	8	5	6	6	8	54.8	37.0	37.0	6	16	39.0	42.0	6	16	29.0	29.0	5	6	5	6	46.9	123	135	6	7.5	36.0	40.0	5	12	5	6	0
44 FT	17	19	14	8	6	8	6	8	54.6	37.0	37.0	6	15	39.0	42.0	6	15	29.0	29.0	6	8	5	6	46.8	123	135	6	7	36.0	40.0	5	12	5	6	0
46 FT	18	20	14	8	6	8	6	7.5	55.3	38.0	38.0	6	16	39.0	42.0	6	16	28.0	29.0	6	8	5	6	47.3	124	136	6	7.5	36.0	40.0	5	12	5	6	0
48 FT	18	20	15	8	6	7.5	6	8	55.4	38.0	42.0	6	15	39.0	42.0	6	15	28.0	29.0	6	7.5	6	8	50.0	124	136	6	7	36.0	40.0	5	12	6	8.5	0
50 FT	18	21	15	8	6	7	6	7.5	55.4	38.0	42.0	6	14	39.0	42.0	6	14	28.0	29.0	6	8	6	8	50.6	125	137	6	7	36.0	40.0	5	12	6	8	0

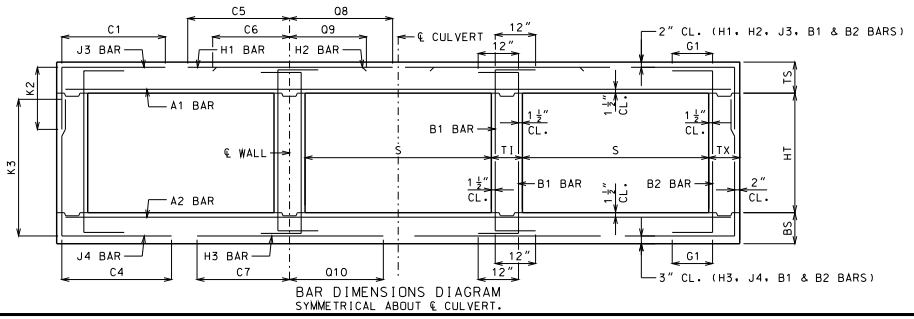

BAR DIMENSIONS DIAGRAM
SYMMETRICAL ABOUT ℄ CULVERT.

GENERAL NOTES:

IF DESIGN FILL IS BETWEEN TABULATED DESIGN FILLS, USE THE NEXT GREATER TABULATED DESIGN FILL, EXCEPT FOR DESIGN FILLS BETWEEN 2 FEET AND 4 FEET. FOR DESIGN FILLS BETWEEN 2 FEET AND 4 FEET USE THE GREATER MEMBER THICKNESS, AREA OF REINFORCEMENT AND BAR DIMENSIONS FROM THE 2 FEET AND 4 FEET TABULATED DESIGN FILLS. AREA OF REINFORCEMENT EQUALS BAR AREA PER FOOT SPACING.

SPECIAL DESIGNS ARE REQUIRED WHEN THE DESIGN FILL IS LESS THAN 1 FOOT OR GREATER THAN 50 FEET.

DIMENSIONS ARE IN INCHES UNLESS OTHERWISE SPECIFIED.

DESIGN FILLS ARE MEASURED FROM THE TOP OF TOP SLAB TO THE TOP OF EARTH FILL OR ROADWAY.

CULVERTS MEET STRENGTH AND SERVICEABILITY REQUIREMENTS FOR THE DESIGN VEHICULAR LIVE LOAD HL-93 MINUS THE LANE LOAD.

MISSOURI HIGHWAYS AND TRANSPORTATION COMMISSION
105 WEST CAPITOL
JEFFERSON CITY, MO 65102
1-888-ASK-MODOT (1-888-275-6636)

STATE OF MISSOURI
DENNIS W. HECKMAN
NUMBER PE-27141
PROFESSIONAL ENGINEER
THIS SHEET HAS BEEN SIGNED, SEALED AND DATED ELECTRONICALLY.

CONCRETE TRIPLE BOX CULVERT

MEMBER THICKNESS
BAR SIZE, SPACING & DIMENSIONS

SPAN (S): 7 FEET
HEIGHT (HT): 9 THRU 10 FEET

DATE EFFECTIVE: 12/01/2011
DATE PREPARED: 9/29/2011

703.87

SHEET NO.
9 OF 27

IF A SEAL IS PRESENT ON THIS SHEET IT HAS BEEN ELECTRONICALLY SEALED AND DATED.

SPAN (S) = 8 FT HEIGHT (HT) = 4 FT OR 5 FT OR 6 FT

DESIGN FILL	MEMBER THICKNESS				TOP SLAB BARS														BOTTOM SLAB BARS												WALL BARS				
					A1 BARS		J3 BARS			K2			H1 BARS				H2 BARS				A2 BARS		J4 BARS			K3			H3 BARS				B1 BARS		B2 BARS		
	TS	BS	TX	TI	SIZE	SPA.	SIZE	SPA.	C1	HT=4′	HT=5′	HT=6′	SIZE	SPA.	C5	Q8	SIZE	SPA.	C6	Q9	SIZE	SPA.	SIZE	SPA.	C4	HT=4′	HT=5′	HT=6′	SIZE	SPA.	C7	Q10	SIZE	SPA.	SIZE	SPA.	G1
1 FT	12	8	8	8	5	7	4	8.5	44.8	28.0	28.0	28.0	4	13	81.5	60.5	4	13	27.0	23.0	4	7.5	4	6.5	42.0	52	64	76	5	7	39.0	40.0	5	12	5	12	12
2 FT	12	8	8	8	5	7	4	8.5	44.8	28.0	28.0	28.0	4	12	81.5	60.5	4	12	26.0	25.0	4	6.5	4	6.5	38.8	52	64	76	5	6.5	38.0	40.0	5	12	5	12	12
4 FT	8	8	8	8	4	6	5	6	40.6	24.0	24.0	24.0	5	16	50.0	64.0	5	16	27.0	27.0	4	6	4	6	35.4	52	64	76	5	6	38.0	40.0	5	11	5	12	12
6 FT	8	8	8	8	4	6	5	6.5	36.5	28.0	24.0	28.0	5	15	42.0	45.0	5	15	26.0	26.0	5	8.5	5	6.5	33.5	52	64	76	6	7	39.0	41.0	5	12	5	12	12
8 FT	8	9	8	8	4	6	5	6	34.4	24.0	24.0	24.0	5	14	39.0	41.0	5	14	25.0	25.0	5	8	4	6.5	31.9	53	65	77	5	6	36.0	39.0	5	12	5	12	0
10 FT	9	10	8	8	5	8.5	4	6	32.6	25.0	25.0	25.0	5	15	38.0	41.0	5	15	25.0	25.0	5	8	4	7.5	30.5	54	66	78	5	6	35.0	39.0	5	12	5	12	0
12 FT	9	10	8	8	5	8.5	5	6.5	31.6	25.0	25.0	25.0	5	14	37.0	40.0	5	14	24.0	25.0	5	7	4	6.5	29.8	54	66	78	6	7	38.0	42.0	5	12	5	12	0
14 FT	10	11	8	8	5	8	5	7.5	30.5	26.0	26.0	26.0	5	14	36.0	40.0	5	14	24.0	25.0	5	6.5	4	6.5	29.0	55	67	79	5	6	34.0	39.0	5	12	5	12	0
16 FT	11	12	8	8	5	7.5	5	8.5	29.6	27.0	27.0	27.0	5	14	35.0	40.0	5	14	24.0	25.0	5	6.5	4	6.5	28.4	56	68	80	5	6	34.0	39.0	5	12	5	12	0
18 FT	11	13	8	8	5	7.5	5	8	29.5	27.0	27.0	27.0	5	13	35.0	39.0	5	13	24.0	25.0	5	6	4	6.5	27.6	57	69	81	6	8	37.0	43.0	5	12	5	12	0
20 FT	12	14	8	8	5	7	5	8.5	28.8	28.0	28.0	28.0	5	13	35.0	39.0	5	13	24.0	25.0	5	6	4	6.5	27.3	58	70	82	6	8	36.0	43.0	5	12	5	12	0
22 FT	13	14	8	8	5	6.5	5	8.5	28.1	29.0	29.0	29.0	5	12	34.0	40.0	5	12	23.0	24.0	6	8	4	6	27.4	58	70	82	6	7.5	37.0	43.0	5	12	5	12	0
24 FT	14	15	8	8	5	6	5	8.5	27.9	30.0	30.0	30.0	5	12	34.0	40.0	5	12	22.0	23.0	6	8	4	6	27.3	59	71	83	6	7.5	36.0	43.0	5	12	5	12	0
26 FT	15	16	8	8	6	8.5	5	8	32.6	31.0	31.0	31.0	6	16	42.0	49.0	6	16	30.0	32.0	6	8	4	6	27.3	60	72	84	6	7.5	36.0	43.0	5	12	5	12	0
28 FT	15	16	8	8	6	8	5	8	31.6	31.0	31.0	31.0	6	16	42.0	48.0	6	16	31.0	32.0	6	7.5	4	6	26.1	60	72	84	6	7	36.0	43.0	5	12	5	12	0
30 FT	16	17	8	8	6	8	5	7	31.5	32.0	32.0	32.0	6	15	42.0	48.0	6	15	30.0	31.0	6	7.5	4	6	26.3	61	73	85	6	7	36.0	43.0	5	12	5	12	0
32 FT	16	18	8	8	6	7.5	5	7	31.6	32.0	36.0	36.0	6	15	42.0	48.0	6	15	31.0	32.0	6	7.5	5	6.5	26.1	62	74	86	6	7	36.0	43.0	5	12	5	12	0
34 FT	17	19	8	8	6	7.5	5	6.5	31.6	37.0	37.0	37.0	6	14	42.0	48.0	6	14	30.0	31.0	6	7.5	5	6.5	26.3	63	75	87	6	7	36.0	43.0	5	12	5	11.5	0
36 FT	18	19	8	8	6	7.5	5	6.5	31.5	38.0	38.0	38.0	6	14	42.0	48.0	6	14	30.0	31.0	6	7.5	5	6.5	26.4	63	75	87	6	7	36.0	43.0	5	12	5	10.5	0
38 FT	18	20	8	8	6	7	5	6.5	31.6	38.0	38.0	38.0	6	13	42.0	48.0	6	13	30.0	31.0	6	7.5	5	6	26.4	64	76	88	6	7	36.0	43.0	5	12	5	10	0
40 FT	19	20	8	8	6	7	5	6	31.6	39.0	39.0	39.0	6	13	42.0	48.0	6	13	29.0	31.0	6	6.5	5	6	26.5	64	76	88	6	6.5	36.0	43.0	5	12	5	9.5	0
42 FT	19	21	8	8	6	6	5	6	31.8	39.0	39.0	39.0	6	12	42.0	48.0	6	12	30.0	31.0	6	7	6	7.5	29.6	65	77	89	6	6.5	36.0	43.0	5	12	5	9.5	0
44 FT	20	22	8	8	6	6.5	6	7.5	35.9	44.0	44.0	44.0	6	13	41.0	48.0	6	13	29.0	30.0	6	7	6	7	29.8	66	78	90	6	6.5	36.0	43.0	5	12	5	9.5	0
46 FT	21	22	8	8	6	6.5	6	7	35.8	45.0	45.0	45.0	6	13	41.0	48.0	6	13	29.0	30.0	6	6.5	6	7	29.9	66	78	90	6	6.5	36.0	43.0	5	12	5	9.5	0
48 FT	21	23	8	8	6	6.5	6	7	36.0	45.0	45.0	45.0	6	13	41.0	48.0	6	13	29.0	30.0	6	7	6	6.5	30.0	67	79	91	6	6.5	36.0	43.0	5	12	5	9.5	0
50 FT	22	23	8	8	6	6.5	6	6.5	35.9	46.0	46.0	46.0	6	13	41.0	47.0	6	13	29.0	30.0	6	6.5	6	6.5	30.1	67	79	91	6	6	36.0	43.0	5	12	5	9	0

SPAN (S) = 8 FT HEIGHT (HT) = 7 FT OR 8 FT OR 9 FT

DESIGN FILL	MEMBER THICKNESS				TOP SLAB BARS														BOTTOM SLAB BARS												WALL BARS				
					A1 BARS		J3 BARS			K2			H1 BARS				H2 BARS				A2 BARS		J4 BARS			K3			H3 BARS				B1 BARS		B2 BARS		
	TS	BS	TX	TI	SIZE	SPA.	SIZE	SPA.	C1	HT=7′	HT=8′	HT=9′	SIZE	SPA.	C5	Q8	SIZE	SPA.	C6	Q9	SIZE	SPA.	SIZE	SPA.	C4	HT=7′	HT=8′	HT=9′	SIZE	SPA.	C7	Q10	SIZE	SPA.	SIZE	SPA.	G1
1 FT	12	9	8	8	5	7	4	6	44.8	28.0	28.0	28.0	4	13	81.5	60.5	4	13	27.0	25.0	4	7.5	4	6	66.0	89	101	113	5	8	41.0	41.0	5	12	5	12	12
2 FT	12	9	8	8	5	7	4	6	44.8	28.0	28.0	28.0	4	12	81.5	60.5	4	12	26.0	24.0	4	6.5	5	6.5	61.3	89	101	113	5	7.5	39.0	41.0	5	12	5	12	12
4 FT	8	8	8	8	4	6	6	7.5	47.8	28.0	32.0	32.0	5	16	83.5	64.0	5	16	27.0	28.0	5	8.5	6	6	55.0	88	100	112	5	6	38.0	40.0	5	12	5	12	12
6 FT	8	9	8	8	4	6	6	7.5	52.5	24.0	28.0	32.0	5	15	44.0	47.0	5	15	26.0	26.0	5	8.5	6	6.5	52.3	89	101	113	5	6.5	37.0	40.0	5	12	5	12	12
8 FT	8	9	8	8	4	6	6	7.5	47.4	24.0	28.0	32.0	5	14	40.0	42.0	5	14	25.0	25.0	5	7.5	6	6	48.1	89	101	113	5	6	36.0	39.0	5	12	5	11.5	0
10 FT	9	10	8	8	5	8.5	6	7	46.3	25.0	29.0	33.0	5	15	39.0	41.0	5	15	25.0	25.0	5	7.5	6	6.5	46.9	90	102	114	5	6	35.0	39.0	5	12	5	11	0
12 FT	9	10	8	8	5	8.5	6	7	44.8	29.0	33.0	33.0	5	14	37.0	40.0	5	14	24.0	25.0	5	6.5	6	6	45.4	90	102	114	6	7	38.0	42.0	5	12	5	10	0
14 FT	10	11	8	8	5	8	6	6.5	44.1	30.0	30.0	34.0	5	14	37.0	40.0	5	14	24.0	25.0	5	6.5	6	6	44.9	91	103	115	5	6	35.0	39.0	5	12	5	9.5	0
16 FT	11	12	8	8	5	7.5	6	6.5	43.6	31.0	31.0	35.0	5	14	36.0	40.0	5	14	24.0	25.0	5	6.5	6	6.5	44.4	92	104	116	5	6	34.0	39.0	5	12	5	9.5	0
18 FT	11	13	8	8	5	7.5	6	6	42.8	31.0	31.0	35.0	5	13	35.0	39.0	5	13	24.0	25.0	5	6	6	6.5	43.9	93	105	117	6	8	37.0	43.0	5	12	5	9.5	0
20 FT	12	14	8	8	5	7	6	6	42.4	32.0	32.0	36.0	5	13	35.0	39.0	5	13	24.0	25.0	5	6	6	6.5	43.4	94	106	118	6	8	37.0	43.0	5	12	5	9.5	0
22 FT	13	14	8	8	5	6.5	6	6	42.1	33.0	33.0	37.0	5	12	35.0	39.0	5	12	23.0	24.0	6	8	6	6	43.0	94	106	118	6	7.5	37.0	43.0	5	12	5	9	0
24 FT	14	15	10	8	5	6	5	6.5	40.0	34.0	34.0	34.0	5	12	34.0	39.0	5	12	22.0	23.0	6	8.5	5	7	40.4	95	107	119	6	7	37.0	43.0	5	12	5	8	0
26 FT	14	16	10	8	5	6	5	6	39.8	34.0	34.0	34.0	5	12	34.0	39.0	5	12	22.0	24.0	6	8	5	7	40.4	96	108	120	6	7.5	37.0	43.0	5	12	5	8	0
28 FT	15	16	10	8	6	8	5	6.5	43.0	35.0	35.0	35.0	6	16	42.0	48.0	6	16	30.0	32.0	6	7.5	5	7	38.4	96	108	120	6	7	37.0	43.0	5	12	5	8	0
30 FT	15	17	11	8	6	7.5	5	6.5	43.5	31.0	35.0	35.0	6	15	42.0	47.0	6	15	31.0	32.0	6	8	5	7	38.8	97	109	121	6	7	37.0	43.0	5	12	5	8.5	0
32 FT	16	18	11	8	6	8	5	6	43.8	32.0	36.0	36.0	6	15	42.0	47.0	6	15	30.0	32.0	6	8	5	7	39.0	98	110	122	6	7	37.0	43.0	5	12	5	8	0
34 FT	17	19	11	8	6	7.5	5	6	43.9	33.0	37.0	37.0	6	14	42.0	47.0	6	14	30.0	31.0	6	8	5	7	39.3	99	111	123	6	7	37.0	43.0	5	12	5	7.5	0
36 FT	17	19	12	8	6	7	5	6	44.4	33.0	37.0	37.0	6	14	42.0	47.0	6	14	30.0	31.0	6	7.5	5	6.5	39.3	99	111	123	6	6.5	37.0	43.0	5	12	5	8	0
38 FT	18	20	12	8	6	7.5	5	6	44.6	38.0	38.0	38.0	6	13	42.0	47.0	6	13	29.0	31.0	6	7.5	5	6.5	39.6	100	112	124	6	6.5	37.0	43.0	5	12	5	7.5	0
40 FT	19	20	12	8	6	7	5	6	44.6	39.0	39.0	39.0	6	14	42.0	47.0	6	14	29.0	30.0	6	6.5	5	6.5	39.6	100	112	124	6	6.5	37.0	43.0	5	12	5	7	0
42 FT	19	21	12	8	6	7	6	7.5	48.8	39.0	39.0	39.0	6	13	42.0	47.0	6	13	29.0	30.0	6	7	5	6.5	39.8	101	113	125	6	6.5	37.0	43.0	5	12	5	7	0
44 FT	20	22	13	8	6	7	5	6	45.5	40.0	40.0	40.0	6	14	41.0	46.0	6	14	29.0	30.0	6	7	5	6	40.3	102	114	126	6	6.5	37.0	44.0	5	12	5	7	0
46 FT	20	22	13	8	6	6.5	6	8	49.5	40.0	40.0	40.0	6	13	41.0	46.0	6	13	29.0	30.0	6	7	5	6	40.3	102	114	126	6	6	37.0	44.0	5	12	5	6.5	0
48 FT	21	23	13	8	6	6.5	6	8	49.6	41.0	41.0	41.0	6	13	41.0	46.0	6	13	29.0	30.0	6	7	5	6	40.5	103	115	127	6	6.5	37.0	44.0	5	12	5	6.5	0
50 FT	21	23	13	8	6	6.5	6	7	49.6	41.0	41.0	41.0	6	13	41.0	46.0	6	13	29.0	30.0	6	6	5	6	40.5	103	115	127	6	6	37.0	44.0	5	12	5	6.5	0

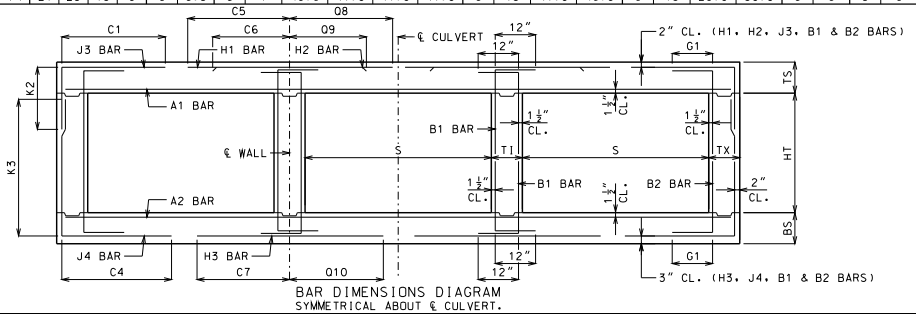

BAR DIMENSIONS DIAGRAM
SYMMETRICAL ABOUT ℄ CULVERT.

GENERAL NOTES:

IF DESIGN FILL IS BETWEEN TABULATED DESIGN FILLS, USE THE NEXT GREATER TABULATED DESIGN FILL, EXCEPT FOR DESIGN FILLS BETWEEN 2 FEET AND 4 FEET. FOR DESIGN FILLS BETWEEN 2 FEET AND 4 FEET USE THE GREATER MEMBER THICKNESS, AREA OF REINFORCEMENT AND BAR DIMENSIONS FROM THE 2 FEET AND 4 FEET TABULATED DESIGN FILLS. AREA OF REINFORCEMENT EQUALS BAR AREA PER FOOT SPACING.

SPECIAL DESIGNS ARE REQUIRED WHEN THE DESIGN FILL IS LESS THAN 1 FOOT OR GREATER THAN 50 FEET.

DIMENSIONS ARE IN INCHES UNLESS OTHERWISE SPECIFIED.

DESIGN FILLS ARE MEASURED FROM THE TOP OF TOP SLAB TO THE TOP OF EARTH FILL OR ROADWAY.

CULVERTS MEET STRENGTH AND SERVICEABILITY REQUIREMENTS FOR THE DESIGN VEHICULAR LIVE LOAD HL-93 MINUS THE LANE LOAD.

MISSOURI HIGHWAYS AND TRANSPORTATION COMMISSION
105 WEST CAPITOL
JEFFERSON CITY, MO 65102
1-888-ASK-MODOT (1-888-275-6636)

STATE OF MISSOURI — DENNIS W. HECKMAN — NUMBER PE-27141 — PROFESSIONAL ENGINEER
THIS SHEET HAS BEEN SIGNED, SEALED AND DATED ELECTRONICALLY.

CONCRETE TRIPLE BOX CULVERT

MEMBER THICKNESS
BAR SIZE, SPACING & DIMENSIONS

SPAN (S): 8 FEET
HEIGHT (HT): 4 THRU 9 FEET

DATE EFFECTIVE: 12/01/2011
DATE PREPARED: 9/29/2011

703.87

SHEET NO. 10 OF 27

IF A SEAL IS PRESENT ON THIS SHEET IT HAS BEEN ELECTRONICALLY SEALED AND DATED.

SPAN (S) = 8 FT HEIGHT (HT) = 10 FT OR 11 FT

DESIGN FILL	MEMBER THICKNESS				TOP SLAB BARS														BOTTOM SLAB BARS										WALL BARS				
					A1 BARS		J3 BARS					H1 BARS				H2 BARS				A2 BARS		J4 BARS				H3 BARS				B1 BARS		B2 BARS	
	TS	BS	TX	TI	SIZE	SPA.	SIZE	SPA.	C1	K2 HT=10'	K2 HT=11'	SIZE	SPA.	C5	Q8	SIZE	SPA.	C6	Q9	SIZE	SPA.	SIZE	SPA.	C4	K3 HT=10'	K3 HT=11'	SIZE	SPA.	C7	Q10	SIZE	SPA.	SIZE	SPA.	G1
1 FT	12	9	8	9	5	7	5	7	44.9	32.0	32.0	4	13	81.5	61.5	4	13	28.0	26.0	4	6.5	6	6	69.3	125	137	5	7.5	43.0	42.0	5	11.5	5	10	12
2 FT	12	9	9	9	5	7	5	8	45.5	32.0	32.0	4	12	82.5	61.5	4	12	27.0	24.0	4	6.5	6	6.5	70.0	125	137	5	7	41.0	41.0	5	11.5	5	10.5	12
4 FT	8	9	10	9	4	6	6	7	49.1	28.0	28.0	5	16	84.5	65.0	5	16	27.0	27.0	4	6	5	6	65.8	125	137	5	7	39.0	41.0	5	11.5	5	9.5	12
6 FT	8	9	11	9	4	6	5	6	57.1	28.0	28.0	5	16	44.0	44.0	5	16	26.0	26.0	5	9	5	6	56.6	125	137	5	6.5	37.0	39.0	5	11.5	5	9.5	12
8 FT	8	10	11	9	4	6	6	7	54.8	28.0	28.0	5	15	41.0	41.0	5	15	25.0	26.0	5	9	5	6.5	56.4	126	138	5	6.5	37.0	39.0	5	12	5	9	0
10 FT	8	10	11	9	4	6	6	6.5	51.9	28.0	28.0	5	14	39.0	40.0	5	14	25.0	25.0	5	7.5	5	6	54.0	126	138	5	6	36.0	39.0	5	12	5	8.5	0
12 FT	9	11	11	9	5	8.5	6	7	52.5	29.0	29.0	5	14	38.0	39.0	5	14	25.0	25.0	5	7.5	5	6	53.9	127	139	5	6	36.0	39.0	5	12	5	8	0
14 FT	10	11	11	9	5	8	5	6	50.1	30.0	30.0	5	15	37.0	39.0	5	15	25.0	25.0	5	7	5	6	51.9	127	139	5	6	35.0	39.0	5	12	5	7.5	0
16 FT	10	12	11	9	5	7.5	5	6	48.3	30.0	30.0	5	13	36.0	39.0	5	13	24.0	25.0	5	6.5	5	6	52.3	128	140	5	6	35.0	39.0	5	12	5	7.5	0
18 FT	11	13	11	9	5	7.5	5	6.5	48.6	31.0	31.0	5	14	36.0	39.0	5	14	24.0	25.0	5	6.5	6	7	55.0	129	141	6	8	38.0	42.0	5	12	5	7.5	0
20 FT	12	14	11	9	5	7	5	6	48.8	32.0	32.0	5	13	35.0	39.0	5	13	24.0	25.0	5	6.5	6	7	54.9	130	142	6	8	38.0	43.0	5	12	5	7.5	0
22 FT	13	15	11	9	5	6.5	6	8	52.1	33.0	37.0	5	12	35.0	39.0	5	12	23.0	24.0	5	6	6	7	54.9	131	143	6	8	38.0	43.0	5	12	5	7.5	0
24 FT	13	15	12	9	5	6.5	5	6	48.3	33.0	33.0	5	12	35.0	38.0	5	12	23.0	25.0	5	6	6	7.5	53.9	131	143	6	7	38.0	43.0	5	12	5	7	0
26 FT	14	16	12	9	5	6	6	8	51.8	34.0	38.0	5	12	35.0	38.0	5	12	22.0	24.0	5	6	6	7.5	54.1	132	144	6	7.5	38.0	43.0	5	12	5	7	0
28 FT	15	16	12	9	5	6	6	8	56.1	35.0	39.0	6	16	43.0	47.0	6	16	31.0	32.0	6	7.5	6	8	51.0	132	144	6	7	38.0	43.0	5	12	5	7	0
30 FT	15	17	12	9	6	8	6	7	55.9	35.0	39.0	6	16	43.0	47.0	6	16	31.0	32.0	6	8	6	7.5	51.5	133	145	6	7	38.0	43.0	5	12	5	7	0
32 FT	16	18	13	9	6	8	6	8	56.5	36.0	40.0	6	15	42.0	47.0	6	15	30.0	31.0	6	8	6	8.5	51.8	134	146	6	7	38.0	43.0	5	12	5	6.5	0
34 FT	17	19	13	9	6	8	6	7.5	56.9	37.0	41.0	6	14	42.0	47.0	6	14	30.0	31.0	6	8	6	8.5	52.3	135	147	6	7	38.0	43.0	5	12	5	6.5	0
36 FT	17	19	14	9	6	7.5	6	7.5	57.0	37.0	41.0	6	14	42.0	46.0	6	14	30.0	31.0	6	7.5	6	8	51.9	135	147	6	6.5	38.0	43.0	5	12	5	6	0
38 FT	18	20	14	9	6	7.5	6	7.5	57.4	38.0	42.0	6	14	42.0	46.0	6	14	30.0	31.0	6	7.5	6	8	52.3	136	148	6	7	38.0	43.0	5	12	5	6	0
40 FT	18	20	14	9	6	7	6	6.5	57.3	38.0	42.0	6	13	42.0	46.0	6	13	30.0	31.0	6	6.5	6	8	52.1	136	148	6	6.5	38.0	43.0	5	12	5	6	0
42 FT	19	21	15	9	6	7	6	7	57.9	43.0	43.0	6	14	42.0	46.0	6	14	30.0	30.0	6	7	6	8	52.6	137	149	6	6.5	38.0	43.0	5	12	6	8	0
44 FT	19	22	15	9	6	7	6	7	57.9	43.0	43.0	6	13	42.0	46.0	6	13	30.0	30.0	6	7	6	8	53.0	138	150	6	6.5	38.0	43.0	5	12	6	8	0
46 FT	20	22	15	9	6	7	6	6	58.1	44.0	44.0	6	14	42.0	45.0	6	14	30.0	30.0	6	7	6	7.5	52.9	138	150	6	6.5	38.0	43.0	5	12	6	8	0
48 FT	20	23	16	9	6	6.5	6	7	58.5	44.0	44.0	6	13	42.0	45.0	6	13	30.0	30.0	6	7	6	7.5	53.3	139	151	6	6.5	38.0	44.0	5	12	6	8	0
50 FT	21	23	16	9	6	6.5	6	6.5	58.9	45.0	45.0	6	13	42.0	45.0	6	13	29.0	30.0	6	6.5	6	7.5	53.3	139	151	6	6	38.0	44.0	5	12	6	8	0

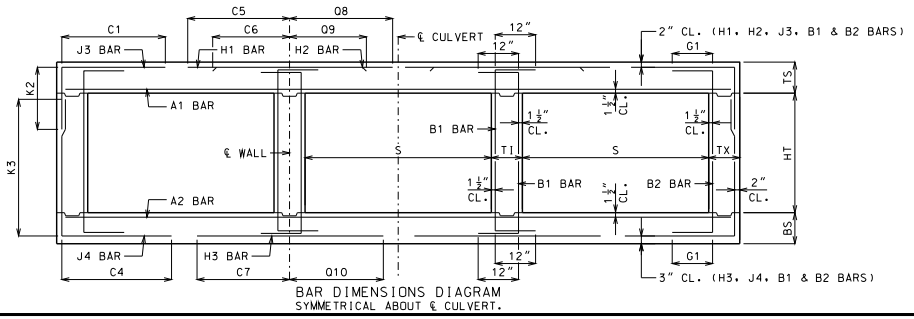

BAR DIMENSIONS DIAGRAM
SYMMETRICAL ABOUT ℄ CULVERT.

GENERAL NOTES:

IF DESIGN FILL IS BETWEEN TABULATED DESIGN FILLS, USE THE NEXT GREATER TABULATED DESIGN FILL, EXCEPT FOR DESIGN FILLS BETWEEN 2 FEET AND 4 FEET. FOR DESIGN FILLS BETWEEN 2 FEET AND 4 FEET USE THE GREATER MEMBER THICKNESS, AREA OF REINFORCEMENT AND BAR DIMENSIONS FROM THE 2 FEET AND 4 FEET TABULATED DESIGN FILLS. AREA OF REINFORCEMENT EQUALS BAR AREA PER FOOT SPACING.

SPECIAL DESIGNS ARE REQUIRED WHEN THE DESIGN FILL IS LESS THAN 1 FOOT OR GREATER THAN 50 FEET.

DIMENSIONS ARE IN INCHES UNLESS OTHERWISE SPECIFIED.

DESIGN FILLS ARE MEASURED FROM THE TOP OF TOP SLAB TO THE TOP OF EARTH FILL OR ROADWAY.

CULVERTS MEET STRENGTH AND SERVICEABILITY REQUIREMENTS FOR THE DESIGN VEHICULAR LIVE LOAD HL-93 MINUS THE LANE LOAD.

MISSOURI HIGHWAYS AND TRANSPORTATION COMMISSION
105 WEST CAPITOL
JEFFERSON CITY, MO 65102
1-888-ASK-MODOT (1-888-275-6636)

STATE OF MISSOURI
DENNIS W. HECKMAN
NUMBER PE-27141
PROFESSIONAL ENGINEER
THIS SHEET HAS BEEN SIGNED, SEALED AND DATED ELECTRONICALLY.

CONCRETE TRIPLE BOX CULVERT

MEMBER THICKNESS
BAR SIZE, SPACING & DIMENSIONS

SPAN (S): 8 FEET
HEIGHT (HT): 10 THRU 11 FEET

DATE EFFECTIVE: 12/01/2011
DATE PREPARED: 9/29/2011

703.87

SHEET NO.
11 OF 27

IF A SEAL IS PRESENT ON THIS SHEET IT HAS BEEN ELECTRONICALLY SEALED AND DATED.

SPAN (S) = 9 FT HEIGHT (HT) = 5 FT OR 6 FT OR 7 FT

DESIGN FILL	MEMBER THICKNESS				TOP SLAB BARS														BOTTOM SLAB BARS												WALL BARS				
					A1 BARS		J3 BARS						H1 BARS				H2 BARS				A2 BARS		J4 BARS						H3 BARS				B1 BARS		B2 BARS	
										K2															K3									
	TS	BS	TX	TI	SIZE	SPA.	SIZE	SPA.	C1	HT=5′	HT=6′	HT=7′	SIZE	SPA.	C5	Q8	SIZE	SPA.	C6	Q9	SIZE	SPA.	SIZE	SPA.	C4	HT=5′	HT=6′	HT=7′	SIZE	SPA.	C7	Q10	SIZE	SPA.	SIZE	SPA.	G1
1 FT	13	8	8	8	5	6.5	4	7.5	48.3	29.0	29.0	29.0	4	12	89.5	66.5	4	12	28.0	26.0	4	6.5	5	6	46.1	64	76	88	5	6	42.0	43.0	5	12	5	12	12
2 FT	13	9	8	8	5	6.5	4	7.5	48.3	29.0	29.0	29.0	5	17	89.5	68.5	5	17	27.0	27.0	4	6.5	4	6	43.9	65	77	89	5	6.5	41.0	43.0	5	12	5	12	12
4 FT	9	9	8	8	5	8.5	5	6.5	44.8	25.0	25.0	25.0	5	16	57.0	70.0	5	16	29.0	29.0	5	8.5	4	6	39.6	65	77	89	5	6	40.0	43.0	5	12	5	12	12
6 FT	9	9	8	8	5	8.5	5	6.5	39.6	25.0	25.0	29.0	5	15	46.0	52.0	5	15	27.0	28.0	5	7.5	5	6.5	36.5	65	77	89	6	7	42.0	45.0	5	12	5	12	12
8 FT	9	10	8	8	5	8.5	5	6.5	36.8	25.0	25.0	25.0	5	14	42.0	45.0	5	14	26.0	27.0	5	7.5	4	6.5	34.8	66	78	90	5	6	38.0	42.0	5	12	5	12	0
10 FT	9	10	8	8	5	8.5	5	6	35.4	25.0	25.0	29.0	5	12	41.0	44.0	5	12	26.0	26.0	5	7	5	7	33.5	66	78	90	6	6.5	41.0	45.0	5	12	5	12	0
12 FT	10	11	8	8	5	8	5	7	33.9	26.0	26.0	30.0	5	12	40.0	44.0	5	12	26.0	26.0	5	6.5	5	7.5	32.4	67	79	91	6	7	40.0	45.0	5	12	5	12	0
14 FT	11	12	8	8	5	7.5	5	7.5	32.8	27.0	27.0	31.0	5	13	39.0	43.0	5	13	25.0	26.0	5	6	5	8.5	31.6	68	80	92	6	7	40.0	46.0	5	12	5	12	0
16 FT	12	13	8	8	5	7	5	8	31.9	28.0	28.0	32.0	5	13	38.0	43.0	5	13	25.0	27.0	5	6	5	8.5	31.0	69	81	93	6	7	39.0	46.0	5	12	5	12	0
18 FT	13	14	8	8	5	6.5	5	8	31.3	29.0	29.0	33.0	5	12	37.0	43.0	5	12	25.0	26.0	6	8	5	8.5	30.6	70	82	94	6	7.5	39.0	46.0	5	12	5	12	0
20 FT	14	15	8	8	5	6	5	8.5	30.6	30.0	30.0	34.0	5	12	37.0	43.0	5	12	24.0	26.0	6	8	5	8.5	30.3	71	83	95	6	7	39.0	46.0	5	12	5	12	0
22 FT	15	16	8	8	6	8	5	8	35.3	31.0	31.0	35.0	6	16	45.0	52.0	6	16	32.0	34.0	6	7.5	5	8	30.0	72	84	96	6	7	39.0	46.0	5	12	5	12	0
24 FT	15	16	8	8	6	8	5	7.5	35.0	31.0	35.0	35.0	6	16	45.0	52.0	6	16	33.0	35.0	6	6.5	5	8	29.8	72	84	96	6	6.5	39.0	46.0	5	12	5	11.5	0
26 FT	16	17	8	8	6	8	5	7	34.9	32.0	36.0	36.0	6	15	45.0	52.0	6	15	32.0	34.0	6	7	5	7	29.8	73	85	97	6	6.5	39.0	46.0	5	12	5	10.5	0
28 FT	17	18	8	8	6	7.5	5	6.5	34.8	37.0	37.0	37.0	6	14	45.0	52.0	6	14	32.0	34.0	6	7	5	6.5	29.8	74	86	98	6	6.5	39.0	46.0	5	12	5	9.5	0
30 FT	18	19	8	8	6	7	5	6.5	33.6	38.0	38.0	38.0	6	13	44.0	52.0	6	13	31.0	32.0	6	7	5	6.5	28.8	75	87	99	6	6	39.0	46.0	5	12	5	9.5	0
32 FT	18	20	8	8	6	7	5	6.5	33.8	38.0	38.0	38.0	6	13	44.0	51.0	6	13	32.0	33.0	6	7	5	6	28.8	76	88	100	6	6.5	39.0	46.0	5	12	5	9.5	0
34 FT	19	20	8	8	6	6.5	5	6	33.6	39.0	39.0	39.0	6	13	44.0	51.0	6	13	31.0	33.0	6	6	5	6	28.9	76	88	100	6	6	39.0	46.0	5	12	5	9.5	0
36 FT	20	21	8	8	6	6.5	6	7.5	37.8	44.0	44.0	44.0	6	12	44.0	51.0	6	12	30.0	32.0	6	6.5	6	7.5	32.0	77	89	101	6	6	39.0	46.0	5	12	5	9.5	0
38 FT	20	22	8	8	6	6	6	7.5	37.9	44.0	44.0	44.0	6	12	44.0	51.0	6	12	31.0	32.0	6	6.5	6	7	32.0	78	90	102	6	6	39.0	46.0	5	12	5	9	0
40 FT	21	23	8	8	6	6	6	7	38.0	45.0	45.0	45.0	6	12	44.0	51.0	6	12	30.0	32.0	6	6.5	6	6.5	32.3	79	91	103	6	6	39.0	46.0	5	12	5	8.5	0
42 FT	22	23	8	8	6	6	6	6.5	37.9	46.0	46.0	46.0	6	12	44.0	51.0	6	12	30.0	31.0	6	6	6	6.5	32.3	79	91	103	7	8	42.0	49.0	5	12	5	8	0
44 FT	23	24	9	8	6	6	6	7	38.8	47.0	47.0	47.0	6	12	44.0	50.0	6	12	30.0	31.0	6	6	6	7	33.0	80	92	104	7	8	42.0	50.0	5	12	5	8.5	0
46 FT	23	25	9	8	7	8	6	7	38.9	47.0	47.0	47.0	7	16	49.0	55.0	7	16	35.0	36.0	6	6	6	7	33.0	81	93	105	7	8	42.0	50.0	5	12	5	8.5	0
48 FT	24	25	9	8	7	8	6	7	38.9	48.0	48.0	48.0	6	12	43.0	50.0	6	12	30.0	31.0	6	6	6	7	33.1	81	93	105	7	7.5	42.0	50.0	5	12	5	8	0
50 FT	24	26	9	8	7	7.5	6	6.5	39.0	48.0	48.0	48.0	7	15	48.0	55.0	7	15	35.0	36.0	6	6	6	6.5	33.3	82	94	106	7	7.5	42.0	50.0	5	12	5	7.5	0

SPAN (S) = 9 FT HEIGHT (HT) = 8 FT OR 9 FT OR 10 FT

DESIGN FILL	MEMBER THICKNESS				TOP SLAB BARS														BOTTOM SLAB BARS												WALL BARS				
					A1 BARS		J3 BARS						H1 BARS				H2 BARS				A2 BARS		J4 BARS						H3 BARS				B1 BARS		B2 BARS	
										K2															K3									
	TS	BS	TX	TI	SIZE	SPA.	SIZE	SPA.	C1	HT=8′	HT=9′	HT=10′	SIZE	SPA.	C5	Q8	SIZE	SPA.	C6	Q9	SIZE	SPA.	SIZE	SPA.	C4	HT=8′	HT=9′	HT=10′	SIZE	SPA.	C7	Q10	SIZE	SPA.	SIZE	SPA.	G1
1 FT	13	9	8	8	5	6.5	5	8.5	48.3	29.0	29.0	33.0	4	12	89.5	66.5	4	12	29.0	27.0	4	6.5	6	6.5	75.0	101	113	125	5	7	43.0	44.0	5	12	5	12	12
2 FT	13	9	8	8	5	6.5	5	8.5	51.3	29.0	33.0	33.0	5	18	91.5	68.5	5	18	28.0	25.0	5	9	6	6.5	69.0	101	113	125	5	6.5	42.0	44.0	5	12	5	11.5	12
4 FT	9	9	8	8	5	8.5	6	7	51.3	29.0	33.0	33.0	5	16	91.5	70.0	5	16	29.0	30.0	5	8	6	6	62.0	101	113	125	5	6	41.0	44.0	5	12	5	10	12
6 FT	9	10	9	8	5	8.5	5	6	54.9	25.0	25.0	29.0	5	15	49.0	53.0	5	15	27.0	28.0	5	8	5	6	53.9	102	114	126	5	6.5	39.0	43.0	5	12	5	11	12
8 FT	9	10	9	8	5	8.5	5	6	48.8	25.0	29.0	29.0	5	14	44.0	46.0	5	14	26.0	27.0	5	7	6	6.5	52.4	102	114	126	6	7	41.0	46.0	5	12	5	10.5	0
10 FT	9	11	9	8	5	8.5	5	6	46.5	25.0	29.0	29.0	5	12	42.0	44.0	5	12	26.0	26.0	5	6.5	6	7	51.4	103	115	127	5	6	38.0	43.0	5	12	5	9.5	0
12 FT	10	11	9	8	5	8	5	6	45.8	30.0	30.0	30.0	5	13	40.0	43.0	5	13	26.0	27.0	5	6.5	6	6	49.5	103	115	127	6	7	40.0	45.0	5	12	5	9	0
14 FT	11	12	9	8	5	7.5	6	7	48.1	31.0	31.0	35.0	5	13	39.0	43.0	5	13	25.0	27.0	5	6	6	6.5	48.8	104	116	128	6	7	40.0	46.0	5	12	5	8.5	0
16 FT	12	13	9	8	5	7	6	6.5	47.4	32.0	32.0	36.0	5	13	39.0	43.0	5	13	25.0	27.0	5	6	6	6.5	48.3	105	117	129	6	7	40.0	46.0	5	12	5	8.5	0
18 FT	13	14	9	8	5	6.5	6	7	46.9	33.0	33.0	37.0	5	12	38.0	43.0	5	12	24.0	26.0	6	8	6	6.5	47.6	106	118	130	6	7.5	40.0	46.0	5	12	5	8.5	0
20 FT	13	15	9	8	5	6.5	6	6	46.0	33.0	33.0	37.0	5	12	38.0	43.0	5	12	25.0	27.0	6	8	6	6.5	47.1	107	119	131	6	7	40.0	46.0	5	12	5	8.5	0
22 FT	14	16	11	8	5	6	5	6	43.5	34.0	34.0	34.0	5	12	37.0	42.0	5	12	25.0	26.0	6	7.5	5	7	44.0	108	120	132	6	7	40.0	46.0	5	12	5	8	0
24 FT	15	17	11	8	6	8	5	6	48.4	35.0	35.0	35.0	6	16	46.0	51.0	6	16	33.0	35.0	6	7.5	5	7	44.0	109	121	133	6	6.5	40.0	46.0	5	12	5	7.5	0
26 FT	16	17	11	8	6	8	6	8	52.1	36.0	36.0	36.0	6	15	45.0	51.0	6	15	32.0	34.0	6	6.5	5	6	43.6	109	121	133	6	6.5	40.0	46.0	5	12	5	7.5	0
28 FT	17	18	12	8	6	7.5	5	6	48.8	37.0	37.0	37.0	6	14	45.0	51.0	6	14	31.0	33.0	6	7	5	6.5	43.9	110	122	134	6	6.5	40.0	46.0	5	12	5	7	0
30 FT	17	19	12	8	6	7.5	5	6	46.9	37.0	37.0	37.0	6	14	44.0	51.0	6	14	32.0	33.0	6	7	5	6.5	42.0	111	123	135	6	6	40.0	47.0	5	12	5	7.5	0
32 FT	18	20	12	8	6	7	6	8	51.0	38.0	38.0	38.0	6	13	44.0	50.0	6	13	31.0	33.0	6	7	5	6.5	42.3	112	124	136	6	6	40.0	47.0	5	12	5	7	0
34 FT	19	20	12	8	6	7	6	8	50.9	39.0	39.0	39.0	6	13	44.0	50.0	6	13	30.0	32.0	6	6	5	6.5	42.3	112	124	136	6	6	40.0	47.0	5	12	5	7	0
36 FT	19	21	13	8	6	6.5	6	8	51.6	39.0	39.0	39.0	6	13	44.0	50.0	6	13	31.0	32.0	6	6.5	5	6	42.5	113	125	137	6	6	40.0	47.0	5	12	5	7	0
38 FT	20	22	13	8	6	6.5	6	7.5	51.8	40.0	40.0	40.0	6	12	44.0	50.0	6	12	30.0	31.0	6	6.5	5	6	42.8	114	126	138	6	6	40.0	47.0	5	12	5	6.5	0
40 FT	21	23	13	8	6	6.5	6	7.5	51.9	41.0	41.0	41.0	6	12	44.0	49.0	6	12	30.0	31.0	6	6.5	5	6	43.0	115	127	139	6	6	40.0	47.0	5	12	5	6.5	0
42 FT	21	24	14	8	6	6	6	7.5	52.6	41.0	41.0	41.0	6	12	44.0	49.0	6	12	30.0	31.0	6	6.5	5	6	43.4	116	128	140	6	6	40.0	47.0	5	12	5	6.5	0
44 FT	22	24	14	8	6	6	6	7.5	52.6	42.0	42.0	42.0	6	12	44.0	49.0	6	12	30.0	31.0	6	6	5	6	43.4	116	128	140	7	7.5	43.0	50.0	5	12	5	6	0
46 FT	23	25	14	8	6	6	6	7	52.8	43.0	43.0	43.0	6	12	43.0	48.0	6	12	30.0	31.0	6	6	5	6	43.6	117	129	141	7	7.5	43.0	50.0	5	12	5	6	0
48 FT	23	26	15	8	6	6	6	7	53.6	43.0	43.0	47.0	6	12	44.0	48.0	6	12	30.0	31.0	6	6	6	8	47.0	118	130	142	7	7.5	43.0	50.0	5	12	5	6	0
50 FT	24	26	15	8	6	6	6	7	53.6	44.0	44.0	48.0	6	12	43.0	48.0	6	12	30.0	30.0	6	6	6	8	47.1	118	130	142	7	7.5	43.0	50.0	5	12	6	8	0

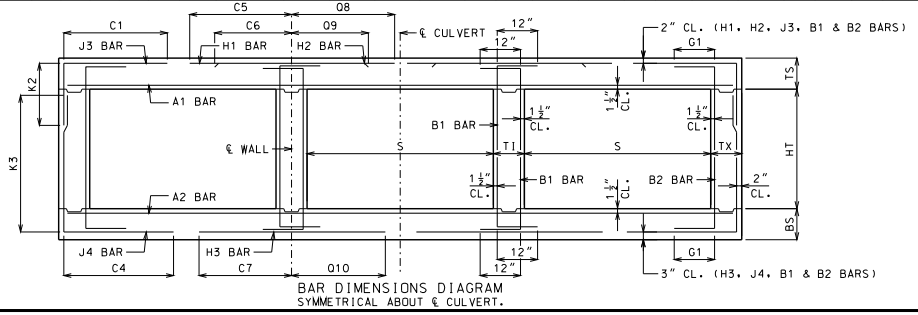

BAR DIMENSIONS DIAGRAM
SYMMETRICAL ABOUT ℄ CULVERT.

GENERAL NOTES:

IF DESIGN FILL IS BETWEEN TABULATED DESIGN FILLS, USE THE NEXT GREATER TABULATED DESIGN FILL, EXCEPT FOR DESIGN FILLS BETWEEN 2 FEET AND 4 FEET. FOR DESIGN FILLS BETWEEN 2 FEET AND 4 FEET USE THE GREATER MEMBER THICKNESS, AREA OF REINFORCEMENT AND BAR DIMENSIONS FROM THE 2 FEET AND 4 FEET TABULATED DESIGN FILLS. AREA OF REINFORCEMENT EQUALS BAR AREA PER FOOT SPACING.

SPECIAL DESIGNS ARE REQUIRED WHEN THE DESIGN FILL IS LESS THAN 1 FOOT OR GREATER THAN 50 FEET.

DIMENSIONS ARE IN INCHES UNLESS OTHERWISE SPECIFIED.

DESIGN FILLS ARE MEASURED FROM THE TOP OF TOP SLAB TO THE TOP OF EARTH FILL OR ROADWAY.

CULVERTS MEET STRENGTH AND SERVICEABILITY REQUIREMENTS FOR THE DESIGN VEHICULAR LIVE LOAD HL-93 MINUS THE LANE LOAD.

MISSOURI HIGHWAYS AND TRANSPORTATION COMMISSION
105 WEST CAPITOL
JEFFERSON CITY, MO 65102
1-888-ASK-MODOT (1-888-275-6636)

STATE OF MISSOURI — DENNIS W. HECKMAN — NUMBER PE-27141 — PROFESSIONAL ENGINEER
THIS SHEET HAS BEEN SIGNED, SEALED AND DATED ELECTRONICALLY.

CONCRETE TRIPLE BOX CULVERT

MEMBER THICKNESS
BAR SIZE, SPACING & DIMENSIONS

SPAN (S): 9 FEET
HEIGHT (HT): 5 THRU 10 FEET

DATE EFFECTIVE: 12/01/2011
DATE PREPARED: 9/29/2011

703.87

SHEET NO.
12 OF 27

IF A SEAL IS PRESENT ON THIS SHEET IT HAS BEEN ELECTRONICALLY SEALED AND DATED.

SPAN (S) = 9 FT HEIGHT (HT) = 11 FT OR 12 FT

DESIGN FILL	MEMBER THICKNESS				TOP SLAB BARS														BOTTOM SLAB BARS										WALL BARS				
					A1 BARS		J3 BARS					H1 BARS				H2 BARS				A2 BARS		J4 BARS				H3 BARS				B1 BARS		B2 BARS	
	TS	BS	TX	TI	SIZE	SPA.	SIZE	SPA.	C1	K2 HT=11'	K2 HT=12'	SIZE	SPA.	C5	O8	SIZE	SPA.	C6	O9	SIZE	SPA.	SIZE	SPA.	C4	K3 HT=11'	K3 HT=12'	SIZE	SPA.	C7	O10	SIZE	SPA.	SIZE	SPA.	G1
1 FT	13	9	9	10	5	6.5	5	7.5	49.3	33.0	33.0	4	12	90.5	67.5	4	12	29.0	27.0	4	6	6	6	76.3	137	149	5	6.5	44.0	44.0	5	10	5	9	12
2 FT	13	10	9	10	5	6.5	5	7	52.3	33.0	33.0	5	18	92.5	69.5	5	18	28.0	25.0	4	6	6	6.5	76.3	138	150	5	7	44.0	45.0	5	11.5	5	9	12
4 FT	9	10	9	10	5	8.5	5	6	52.3	29.0	29.0	5	16	92.5	71.0	5	16	29.0	30.0	5	8.5	6	6	76.3	138	150	5	7	43.0	45.0	5	11.5	5	8.5	12
6 FT	9	10	10	10	5	8.5	5	6	69.4	29.0	29.0	5	16	51.0	49.0	5	16	28.0	28.0	5	7.5	6	6.5	68.8	138	150	5	6	41.0	43.0	5	12	5	8	12
8 FT	9	10	10	10	5	8.5	5	6	60.0	29.0	29.0	5	14	45.0	45.0	5	14	27.0	27.0	5	7	6	6	63.9	138	150	6	7	43.0	45.0	5	12	5	8	0
10 FT	9	11	10	10	5	8.5	6	7	59.0	29.0	33.0	5	13	42.0	43.0	5	13	27.0	27.0	5	6.5	6	6	63.6	139	151	5	6	39.0	43.0	5	12	5	8	0
12 FT	10	12	10	10	5	8	6	7	58.6	30.0	34.0	5	13	41.0	43.0	5	13	26.0	27.0	5	6.5	6	6.5	62.8	140	152	5	6	39.0	43.0	5	12	5	8	0
14 FT	11	12	10	10	5	7.5	6	7.5	58.5	31.0	35.0	5	13	41.0	43.0	5	13	26.0	27.0	5	6	6	6	60.4	140	152	6	7	41.0	45.0	5	12	5	8	0
16 FT	12	13	11	10	5	7	5	6	54.4	32.0	32.0	5	13	40.0	42.0	5	13	26.0	27.0	5	6	6	7	59.1	141	153	6	7	41.0	45.0	5	12	5	7.5	0
18 FT	12	14	11	10	5	7	6	7.5	55.6	32.0	36.0	5	12	39.0	42.0	5	12	26.0	27.0	6	8	6	6.5	59.0	142	154	6	7.5	41.0	46.0	5	12	5	7.5	0
20 FT	13	15	12	10	5	6.5	6	8	55.0	33.0	37.0	5	12	38.0	42.0	5	12	26.0	27.0	6	8	6	7	58.1	143	155	6	7	41.0	46.0	5	12	5	7	0
22 FT	14	16	12	10	5	6	6	7.5	55.0	34.0	38.0	5	12	38.0	42.0	5	12	25.0	27.0	6	7.5	6	7	57.9	144	156	6	7	41.0	46.0	5	12	5	7	0
24 FT	15	17	13	10	6	8	6	7.5	61.0	35.0	39.0	6	16	47.0	51.0	6	16	33.0	35.0	6	7.5	6	7.5	57.4	145	157	6	6.5	41.0	46.0	5	12	5	6.5	0
26 FT	16	17	13	10	6	8	6	7	61.3	40.0	40.0	6	15	46.0	51.0	6	15	33.0	34.0	6	6.5	6	7	56.6	145	157	6	6.5	41.0	46.0	5	12	5	6.5	0
28 FT	16	18	14	10	6	8	6	7.5	61.0	36.0	40.0	6	15	46.0	51.0	6	15	33.0	35.0	6	7	6	7	56.6	146	158	6	6.5	41.0	46.0	5	12	5	6	0
30 FT	17	19	14	10	6	7.5	6	7.5	59.6	37.0	41.0	6	14	45.0	50.0	6	14	32.0	34.0	6	7	6	7.5	54.8	147	159	6	6	41.0	46.0	5	12	5	6	0
32 FT	18	20	14	10	6	7	6	7	59.9	38.0	42.0	6	13	45.0	50.0	6	13	32.0	33.0	6	7	6	7.5	55.0	148	160	6	6	41.0	46.0	5	12	5	6	0
34 FT	18	20	14	10	6	6.5	6	6.5	59.8	38.0	42.0	6	13	45.0	50.0	6	13	32.0	34.0	6	6	6	7.5	54.9	148	160	6	6	41.0	46.0	5	12	5	6	0
36 FT	19	21	15	10	6	6.5	6	7	60.3	43.0	43.0	6	13	45.0	50.0	6	13	31.0	33.0	6	6.5	6	7.5	55.3	149	161	6	6	41.0	47.0	5	12	6	8	0
38 FT	20	22	15	10	6	6.5	6	6.5	60.6	44.0	44.0	6	12	45.0	50.0	6	12	31.0	32.0	6	6.5	6	7.5	55.5	150	162	6	6	41.0	47.0	5	12	6	8	0
40 FT	20	23	16	10	6	6.5	6	6.5	60.9	44.0	44.0	6	12	45.0	49.0	6	12	31.0	32.0	6	6.5	6	7.5	55.9	151	163	6	6	41.0	47.0	5	12	6	8	0
42 FT	21	23	16	10	6	6.5	6	6.5	61.1	45.0	45.0	6	12	45.0	49.0	6	12	31.0	32.0	6	6	6	7.5	55.8	151	163	7	7.5	44.0	50.0	5	12	6	8	0
44 FT	22	24	17	10	6	6	6	6.5	61.9	46.0	46.0	6	12	45.0	49.0	6	12	31.0	32.0	6	6	6	7	56.3	152	164	7	7.5	44.0	50.0	5	12	6	7.5	0
46 FT	22	25	17	10	6	6	6	6	61.9	46.0	46.0	6	12	45.0	48.0	6	12	31.0	32.0	6	6	6	7	56.5	153	165	7	8	44.0	50.0	5	12	6	7.5	0
48 FT	23	26	18	10	6	6	6	6.5	62.5	47.0	47.0	6	12	44.0	48.0	6	12	31.0	31.0	6	6	6	6.5	57.0	154	166	7	8	44.0	50.0	5	12	6	7	0
50 FT	23	26	18	10	7	8	6	6	62.5	47.0	47.0	6	12	44.0	48.0	6	12	31.0	31.0	6	6	6	6.5	56.9	154	166	7	7.5	44.0	50.0	5	12	6	7	0

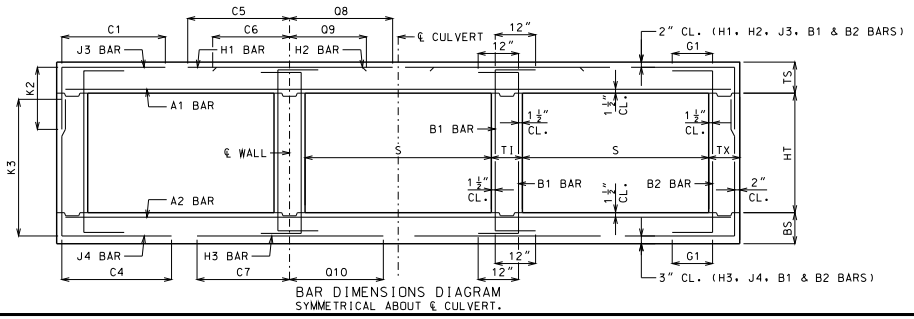

BAR DIMENSIONS DIAGRAM
SYMMETRICAL ABOUT ℄ CULVERT.

GENERAL NOTES:

IF DESIGN FILL IS BETWEEN TABULATED DESIGN FILLS, USE THE NEXT GREATER TABULATED DESIGN FILL, EXCEPT FOR DESIGN FILLS BETWEEN 2 FEET AND 4 FEET. FOR DESIGN FILLS BETWEEN 2 FEET AND 4 FEET USE THE GREATER MEMBER THICKNESS, AREA OF REINFORCEMENT AND BAR DIMENSIONS FROM THE 2 FEET AND 4 FEET TABULATED DESIGN FILLS. AREA OF REINFORCEMENT EQUALS BAR AREA PER FOOT SPACING.

SPECIAL DESIGNS ARE REQUIRED WHEN THE DESIGN FILL IS LESS THAN 1 FOOT OR GREATER THAN 50 FEET.

DIMENSIONS ARE IN INCHES UNLESS OTHERWISE SPECIFIED.

DESIGN FILLS ARE MEASURED FROM THE TOP OF TOP SLAB TO THE TOP OF EARTH FILL OR ROADWAY.

CULVERTS MEET STRENGTH AND SERVICEABILITY REQUIREMENTS FOR THE DESIGN VEHICULAR LIVE LOAD HL-93 MINUS THE LANE LOAD.

MISSOURI HIGHWAYS AND TRANSPORTATION COMMISSION
105 WEST CAPITOL
JEFFERSON CITY, MO 65102
1-888-ASK-MODOT (1-888-275-6636)

STATE OF MISSOURI
DENNIS W. HECKMAN
NUMBER PE-27141
PROFESSIONAL ENGINEER
THIS SHEET HAS BEEN SIGNED, SEALED AND DATED ELECTRONICALLY.

CONCRETE TRIPLE BOX CULVERT

MEMBER THICKNESS
BAR SIZE, SPACING & DIMENSIONS

SPAN (S): 9 FEET
HEIGHT (HT): 11 THRU 12 FEET

DATE EFFECTIVE: 12/01/2011
DATE PREPARED: 9/29/2011

703.87

SHEET NO.
13 OF 27

IF A SEAL IS PRESENT ON THIS SHEET IT HAS BEEN ELECTRONICALLY SEALED AND DATED.

SPAN (S) = 10 FT HEIGHT (HT) = 5 FT OR 6 FT OR 7 FT

DESIGN FILL	MEMBER THICKNESS				TOP SLAB BARS														BOTTOM SLAB BARS												WALL BARS				
					A1 BARS		J3 BARS						H1 BARS				H2 BARS				A2 BARS		J4 BARS						H3 BARS				B1 BARS		B2 BARS	
										K2														K3											
	TS	BS	TX	TI	SIZE	SPA.	SIZE	SPA.	C1	HT=5′	HT=6′	HT=7′	SIZE	SPA.	C5	Q8	SIZE	SPA.	C6	Q9	SIZE	SPA.	SIZE	SPA.	C4	HT=5′	HT=6′	HT=7′	SIZE	SPA.	C7	Q10	SIZE	SPA.	SIZE	SPA.	G1
1 FT	13	9	8	8	5	6.5	4	7	51.9	29.0	29.0	29.0	5	16	98.5	74.5	5	16	29.0	27.0	4	6	4	6	47.4	65	77	89	5	6.5	45.0	47.0	5	12	5	12	12
2 FT	13	9	8	8	5	6.5	4	6.5	51.9	29.0	29.0	29.0	5	14	98.5	74.5	5	14	28.0	29.0	5	8.5	5	6.5	43.3	65	77	89	5	6	44.0	46.0	5	12	5	12	12
4 FT	9	9	8	8	5	7.5	6	7.5	48.4	25.0	29.0	29.0	5	13	59.0	76.0	5	13	30.0	30.0	5	7.5	5	6.5	39.0	65	77	89	6	6.5	46.0	49.0	5	10	5	12	12
6 FT	9	9	8	8	5	8	5	6	39.8	29.0	29.0	29.0	5	13	49.0	55.0	5	13	28.0	29.0	5	7.5	6	7	39.8	65	77	89	6	6	45.0	48.0	5	12	5	12	12
8 FT	10	10	8	8	5	8	5	7.5	36.8	26.0	26.0	30.0	5	13	45.0	50.0	5	13	28.0	28.0	5	7	5	6.5	34.8	66	78	90	6	6.5	44.0	48.0	5	12	5	12	0
10 FT	10	11	8	8	5	8	5	6.5	35.4	26.0	26.0	30.0	6	15	47.0	51.0	6	15	30.0	31.0	5	6.5	5	7.5	32.9	67	79	91	6	6.5	43.0	49.0	5	12	5	12	0
12 FT	11	12	8	8	5	7.5	5	7	33.6	27.0	27.0	31.0	6	16	45.0	50.0	6	16	30.0	31.0	5	6	5	8.5	31.6	68	80	92	6	6.5	42.0	49.0	5	12	5	12	0
14 FT	12	13	8	8	5	7	5	8	32.4	28.0	28.0	32.0	6	16	44.0	50.0	6	16	29.0	31.0	5	6	5	8.5	30.9	69	81	93	6	6.5	42.0	49.0	5	12	5	12	0
16 FT	13	14	8	8	5	6.5	5	8	31.3	29.0	29.0	33.0	6	16	44.0	50.0	6	16	29.0	31.0	6	8	5	8.5	30.3	70	82	94	6	7	42.0	49.0	5	12	5	12	0
18 FT	14	15	8	8	5	6	5	8.5	30.5	30.0	30.0	34.0	6	16	43.0	50.0	6	16	29.0	31.0	6	7.5	5	8.5	29.8	71	83	95	6	7	41.0	49.0	5	12	5	12	0
20 FT	15	16	8	8	6	8	5	8	34.9	31.0	31.0	35.0	6	16	48.0	56.0	6	16	35.0	37.0	6	7	5	8	29.4	72	84	96	6	7	41.0	49.0	5	12	5	12	0
22 FT	16	17	8	8	6	8	5	7	34.4	32.0	32.0	36.0	6	15	48.0	56.0	6	15	34.0	37.0	6	7	5	7	29.0	73	85	97	6	6.5	41.0	50.0	5	12	5	12	0
24 FT	17	18	8	8	6	7.5	5	6.5	34.0	37.0	37.0	37.0	6	14	48.0	56.0	6	14	34.0	36.0	6	6.5	5	6.5	28.9	74	86	98	6	6.5	41.0	50.0	5	12	5	11	0
26 FT	18	19	8	8	6	7	5	6.5	33.9	38.0	38.0	38.0	6	13	47.0	55.0	6	13	33.0	35.0	6	6.5	5	6.5	28.8	75	87	99	6	6	41.0	50.0	5	12	5	10	0
28 FT	19	20	8	8	6	6.5	5	6	33.8	39.0	39.0	39.0	6	13	47.0	55.0	6	13	33.0	35.0	6	6.5	5	6	28.8	76	88	100	6	6	41.0	50.0	5	12	5	9.5	0
30 FT	19	21	8	8	6	6	5	6	33.8	39.0	39.0	39.0	6	12	47.0	55.0	6	12	33.0	36.0	6	6	6	7.5	31.6	77	89	101	7	7.5	44.0	53.0	5	12	5	9.5	0
32 FT	20	22	8	8	6	6.5	6	7.5	37.8	44.0	44.0	44.0	6	12	47.0	55.0	6	12	33.0	35.0	6	6	6	7	31.8	78	90	102	7	7.5	44.0	53.0	5	12	5	9.5	0
34 FT	21	23	8	8	6	6	6	7	36.8	45.0	45.0	45.0	6	12	46.0	55.0	6	12	32.0	34.0	6	6	6	6.5	30.9	79	91	103	7	7.5	44.0	53.0	5	12	5	9.5	0
36 FT	22	23	8	8	6	6	6	6.5	36.8	46.0	46.0	46.0	7	15	51.0	60.0	7	15	36.0	38.0	6	6	6	6.5	31.0	79	91	103	7	7	44.0	53.0	5	12	5	9.5	0
38 FT	23	24	8	8	7	7.5	6	6	36.8	47.0	47.0	47.0	7	15	51.0	59.0	7	15	36.0	37.0	6	6	6	6	31.1	80	92	104	7	7	44.0	53.0	5	12	5	8.5	0
40 FT	23	25	8	8	7	7.5	6	6	36.9	47.0	47.0	47.0	7	15	51.0	59.0	7	15	36.0	38.0	6	6	6	6	31.1	81	93	105	7	7	44.0	53.0	5	12	5	8	0
42 FT	24	26	8	8	7	7.5	6	6	37.0	48.0	48.0	48.0	7	14	51.0	59.0	7	14	36.0	37.0	7	8	7	6.5	34.4	82	94	106	7	7	44.0	53.0	5	12	5	7.5	0
44 FT	25	26	9	8	7	7	6	6.5	37.8	49.0	49.0	49.0	7	14	51.0	59.0	7	14	36.0	37.0	7	7.5	6	6.5	32.0	82	94	106	7	7	44.0	53.0	5	12	5	8.5	0
46 FT	25	27	9	8	7	7	6	6.5	37.9	49.0	49.0	49.0	7	14	51.0	59.0	7	14	36.0	37.0	7	7.5	6	6.5	32.0	83	95	107	7	7	44.0	53.0	5	12	5	8	0
48 FT	26	28	9	8	7	7	6	6.5	38.0	50.0	50.0	50.0	7	14	51.0	58.0	7	14	35.0	37.0	7	7.5	6	6	32.3	84	96	108	7	7	44.0	53.0	5	12	5	7.5	0
50 FT	27	28	9	8	7	7	6	6	38.0	51.0	51.0	51.0	7	14	51.0	58.0	7	14	35.0	37.0	7	7	6	6	32.4	84	96	108	7	6.5	44.0	53.0	5	12	5	7	0

SPAN (S) = 10 FT HEIGHT (HT) = 8 FT OR 9 FT OR 10 FT

DESIGN FILL	MEMBER THICKNESS				TOP SLAB BARS														BOTTOM SLAB BARS												WALL BARS				
					A1 BARS		J3 BARS						H1 BARS				H2 BARS				A2 BARS		J4 BARS						H3 BARS				B1 BARS		B2 BARS	
										K2														K3											
	TS	BS	TX	TI	SIZE	SPA.	SIZE	SPA.	C1	HT=8′	HT=9′	HT=10′	SIZE	SPA.	C5	Q8	SIZE	SPA.	C6	Q9	SIZE	SPA.	SIZE	SPA.	C4	HT=8′	HT=9′	HT=10′	SIZE	SPA.	C7	Q10	SIZE	SPA.	SIZE	SPA.	G1
1 FT	13	9	8	8	5	6.5	5	8.5	54.9	29.0	33.0	33.0	5	16	100.5	74.5	5	16	30.0	30.0	5	8.5	6	6.5	74.1	101	113	125	5	6	46.0	47.0	5	12	5	12	12
2 FT	13	9	8	8	5	6.5	5	8	54.9	29.0	33.0	33.0	5	14	100.5	74.5	5	14	28.0	28.0	5	7.5	6	6	65.8	101	113	125	6	7	47.0	50.0	5	12	5	11.5	12
4 FT	9	9	9	8	5	7	5	6	65.9	29.0	29.0	29.0	5	13	74.0	76.0	5	13	30.0	31.0	5	7.5	6	6.5	57.6	101	113	125	6	6.5	46.0	50.0	5	12	5	11.5	12
6 FT	9	9	9	8	5	8	5	6	51.8	29.0	29.0	29.0	5	13	51.0	57.0	5	13	29.0	29.0	5	7	6	6	52.9	101	113	125	6	6	45.0	48.0	5	12	5	11.5	12
8 FT	9	10	9	8	5	8	5	6	48.1	29.0	29.0	29.0	6	15	49.0	52.0	6	15	30.0	31.0	5	7	6	6.5	51.0	102	114	126	6	6	44.0	49.0	5	12	5	11	0
10 FT	10	11	9	8	5	8	5	6	46.5	30.0	30.0	30.0	5	12	44.0	48.0	5	12	27.0	28.0	5	6.5	6	6.5	49.5	103	115	127	6	6.5	43.0	49.0	5	12	5	10.5	0
12 FT	11	12	9	8	5	7.5	6	7	48.1	31.0	31.0	35.0	6	16	45.0	50.0	6	16	30.0	31.0	5	6	6	6.5	48.4	104	116	128	6	6.5	43.0	49.0	5	12	5	9.5	0
14 FT	12	13	9	8	5	7	6	7	47.0	32.0	32.0	36.0	6	16	45.0	50.0	6	16	29.0	31.0	5	6	6	7	47.4	105	117	129	6	6.5	42.0	49.0	5	12	5	8.5	0
16 FT	13	14	9	8	5	6.5	6	7	46.0	33.0	33.0	37.0	6	16	44.0	50.0	6	16	29.0	31.0	6	8	6	7	46.5	106	118	130	6	7	42.0	49.0	5	12	5	8.5	0
18 FT	14	15	9	8	5	6	6	7	45.3	34.0	34.0	38.0	6	16	43.0	49.0	6	16	29.0	31.0	6	7.5	6	7	45.9	107	119	131	6	7	42.0	49.0	5	12	5	8.5	0
20 FT	15	16	9	8	6	8	6	7	50.5	35.0	35.0	39.0	6	16	49.0	55.0	6	16	35.0	37.0	6	7	6	6.5	45.3	108	120	132	6	7	42.0	49.0	5	12	5	8.5	0
22 FT	15	17	11	8	6	7.5	5	6	47.1	35.0	35.0	35.0	6	15	48.0	55.0	6	15	35.0	37.0	6	7	5	7	42.1	109	121	133	6	6.5	42.0	50.0	5	12	5	8	0
24 FT	17	18	11	8	6	7.5	6	8.5	50.8	37.0	37.0	37.0	6	14	48.0	55.0	6	14	33.0	36.0	6	6.5	5	6.5	42.0	110	122	134	6	6.5	42.0	50.0	5	12	5	7.5	0
26 FT	18	19	11	8	6	7	6	8	50.4	38.0	38.0	38.0	6	13	47.0	55.0	6	13	33.0	35.0	6	6.5	5	6	41.8	111	123	135	6	6	42.0	50.0	5	12	5	7.5	0
28 FT	18	20	12	8	6	7	6	8	51.0	38.0	38.0	38.0	6	13	47.0	54.0	6	13	34.0	36.0	6	6.5	5	6.5	41.9	112	124	136	6	6	42.0	50.0	5	12	5	7.5	0
30 FT	19	21	12	8	6	6.5	6	7.5	50.9	39.0	39.0	39.0	6	13	47.0	54.0	6	13	33.0	35.0	6	6.5	5	6.5	41.9	113	125	137	7	7.5	45.0	53.0	5	12	5	7	0
32 FT	20	22	12	8	6	6.5	6	7	50.9	40.0	40.0	40.0	6	12	47.0	54.0	6	12	32.0	34.0	6	6	5	6.5	42.0	114	126	138	7	7.5	45.0	53.0	5	12	5	7	0
34 FT	21	23	12	8	6	6	6	7.5	49.6	41.0	41.0	41.0	6	12	46.0	53.0	6	12	31.0	33.0	6	6	5	6.5	40.8	115	127	139	7	7.5	45.0	53.0	5	12	5	7	0
36 FT	22	24	12	8	6	6	6	7	49.8	42.0	42.0	42.0	7	15	51.0	58.0	7	15	36.0	37.0	6	6	5	6.5	40.9	116	128	140	7	7.5	45.0	53.0	5	12	5	7	0
38 FT	22	24	13	8	6	6	6	7.5	50.4	42.0	42.0	42.0	7	15	51.0	58.0	7	15	36.0	38.0	6	6	5	6	41.1	116	128	140	7	7	45.0	53.0	5	12	5	6.5	0
40 FT	23	25	13	8	7	7.5	6	7.5	50.4	43.0	43.0	43.0	7	15	51.0	58.0	7	15	36.0	37.0	6	6	5	6	41.4	117	129	141	7	7	45.0	53.0	5	12	5	6.5	0
42 FT	24	26	13	8	7	7.5	6	6.5	50.5	44.0	44.0	44.0	7	15	51.0	57.0	7	15	35.0	36.0	7	8	5	6	41.5	118	130	142	7	7	45.0	53.0	5	12	5	6.5	0
44 FT	24	27	14	8	7	7.5	6	7	51.3	44.0	44.0	44.0	7	14	51.0	57.0	7	14	36.0	37.0	7	8	5	6	41.9	119	131	143	7	7	45.0	54.0	5	12	5	6	0
46 FT	25	27	14	8	7	7	6	7	51.3	45.0	45.0	45.0	7	14	51.0	57.0	7	14	35.0	36.0	7	7.5	5	6	42.0	119	131	143	7	6.5	45.0	53.0	5	12	5	6	0
48 FT	26	28	14	8	7	7	6	7	51.4	46.0	46.0	46.0	7	15	51.0	56.0	7	15	35.0	36.0	7	7.5	5	6	42.1	120	132	144	7	6.5	45.0	53.0	5	12	5	6	0
50 FT	26	29	15	8	7	7	6	7	52.1	50.0	50.0	50.0	7	14	51.0	56.0	7	14	35.0	36.0	7	7.5	6	8	45.5	121	133	145	7	6.5	45.0	54.0	5	12	6	8	0

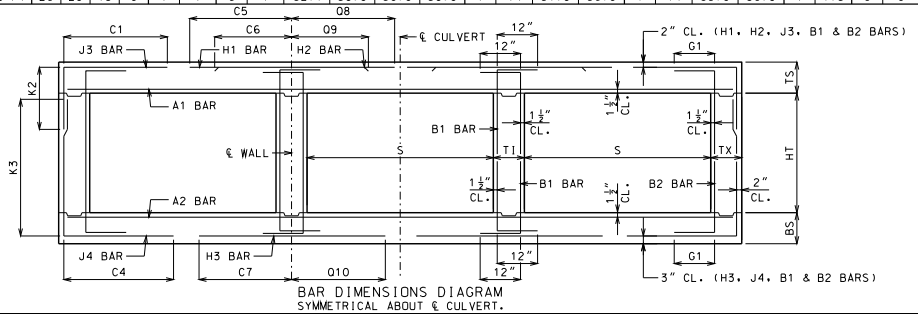

BAR DIMENSIONS DIAGRAM
SYMMETRICAL ABOUT ℄ CULVERT.

GENERAL NOTES:

IF DESIGN FILL IS BETWEEN TABULATED DESIGN FILLS, USE THE NEXT GREATER TABULATED DESIGN FILL, EXCEPT FOR DESIGN FILLS BETWEEN 2 FEET AND 4 FEET. FOR DESIGN FILLS BETWEEN 2 FEET AND 4 FEET USE THE GREATER MEMBER THICKNESS, AREA OF REINFORCEMENT AND BAR DIMENSIONS FROM THE 2 FEET AND 4 FEET TABULATED DESIGN FILLS. AREA OF REINFORCEMENT EQUALS BAR AREA PER FOOT SPACING.

SPECIAL DESIGNS ARE REQUIRED WHEN THE DESIGN FILL IS LESS THAN 1 FOOT OR GREATER THAN 50 FEET.

DIMENSIONS ARE IN INCHES UNLESS OTHERWISE SPECIFIED.

DESIGN FILLS ARE MEASURED FROM THE TOP OF TOP SLAB TO THE TOP OF EARTH FILL OR ROADWAY.

CULVERTS MEET STRENGTH AND SERVICEABILITY REQUIREMENTS FOR THE DESIGN VEHICULAR LIVE LOAD HL-93 MINUS THE LANE LOAD.

MISSOURI HIGHWAYS AND TRANSPORTATION COMMISSION
105 WEST CAPITOL
JEFFERSON CITY, MO 65102
1-888-ASK-MODOT (1-888-275-6636)

STATE OF MISSOURI — DENNIS W. HECKMAN — NUMBER PE-27141 — PROFESSIONAL ENGINEER
THIS SHEET HAS BEEN SIGNED, SEALED AND DATED ELECTRONICALLY.

CONCRETE TRIPLE BOX CULVERT

MEMBER THICKNESS
BAR SIZE, SPACING & DIMENSIONS

SPAN (S): 10 FEET
HEIGHT (HT): 5 THRU 10 FEET

DATE EFFECTIVE: 12/01/2011
DATE PREPARED: 9/29/2011

703.87

SHEET NO.
14 OF 27

IF A SEAL IS PRESENT ON THIS SHEET IT HAS BEEN ELECTRONICALLY SEALED AND DATED.

SPAN (S) = 10 FT HEIGHT (HT) = 11 FT OR 12 FT OR 13 FT

DESIGN FILL	MEMBER THICKNESS				TOP SLAB BARS															BOTTOM SLAB BARS												WALL BARS				
					A1 BARS		J3 BARS						H1 BARS				H2 BARS				A2 BARS		J4 BARS						H3 BARS				B1 BARS		B2 BARS	
										K2														K3											
	TS	BS	TX	TI	SIZE	SPA.	SIZE	SPA.	C1	HT=11'	HT=12'	HT=13'	SIZE	SPA.	C5	Q8	SIZE	SPA.	C6	Q9	SIZE	SPA.	SIZE	SPA.	C4	HT=11'	HT=12'	HT=13'	SIZE	SPA.	C7	Q10	SIZE	SPA.	SIZE	SPA.	G1
1 FT	13	10	9	10	5	6.5	5	6.5	55.9	33.0	33.0	33.0	5	16	101.5	75.5	5	16	30.0	29.0	5	8.5	6	6	82.3	138	150	162	5	6.5	49.0	49.0	5	10	5	8.5	12
2 FT	13	10	10	10	5	6.5	5	6.5	56.5	33.0	33.0	33.0	5	14	101.5	75.5	5	14	29.0	29.0	5	8	6	6.5	83.0	138	150	162	5	6.5	47.0	48.0	5	12	5	8	12
4 FT	9	10	10	10	5	7	6	7	56.5	29.0	29.0	33.0	5	13	101.5	77.0	5	13	31.0	31.0	5	7	6	6	81.3	138	150	162	5	6	46.0	48.0	5	11	5	8	12
6 FT	9	11	10	10	5	8	6	7	75.6	29.0	29.0	33.0	5	13	54.0	53.0	5	13	29.0	29.0	5	7	6	6	77.8	139	151	163	5	6	44.0	47.0	5	12	5	8	12
8 FT	9	11	11	10	5	8	6	7	64.6	29.0	29.0	33.0	5	12	47.0	48.0	5	12	28.0	28.0	5	6.5	6	6.5	69.5	139	151	163	6	7	45.0	49.0	5	12	5	7.5	0
10 FT	10	11	11	10	5	8	5	6	61.1	30.0	30.0	30.0	5	12	46.0	47.0	5	12	28.0	28.0	5	6	6	6	65.8	139	151	163	6	6.5	45.0	48.0	5	12	5	7.5	0
12 FT	11	12	11	10	5	7.5	5	6	60.3	31.0	31.0	31.0	5	12	44.0	47.0	5	12	27.0	28.0	5	6	6	6	65.1	140	152	164	6	6.5	44.0	49.0	5	12	5	7.5	0
14 FT	12	13	11	10	5	7	6	7.5	62.6	32.0	32.0	36.0	5	12	43.0	46.0	5	12	27.0	28.0	5	6	6	6.5	64.4	141	153	165	6	6.5	44.0	49.0	5	12	5	7	0
16 FT	13	14	12	10	5	6.5	6	8	61.3	33.0	33.0	37.0	5	12	42.0	46.0	5	12	27.0	28.0	6	8	6	7	63.0	142	154	166	6	7	44.0	49.0	5	12	5	7	0
18 FT	13	15	12	10	5	6.5	6	7	59.3	33.0	37.0	37.0	6	15	45.0	48.0	6	15	30.0	31.0	6	7.5	6	6.5	62.8	143	155	167	6	7	44.0	49.0	5	12	5	7	0
20 FT	14	16	13	10	5	6	6	7.5	58.8	34.0	38.0	38.0	6	15	44.0	48.0	6	15	30.0	31.0	6	7	6	7	61.8	144	156	168	6	7	44.0	49.0	5	12	5	6.5	0
22 FT	15	17	13	10	6	8	6	6.5	64.6	35.0	39.0	39.0	6	15	50.0	54.0	6	15	36.0	37.0	6	7	6	6.5	61.4	145	157	169	6	6.5	44.0	50.0	5	12	5	6.5	0
24 FT	16	18	14	10	6	8	6	7	64.6	36.0	40.0	40.0	6	15	49.0	54.0	6	15	35.0	37.0	6	6.5	6	6.5	60.5	146	158	170	6	6.5	44.0	50.0	5	12	5	6	0
26 FT	17	19	14	10	6	7.5	6	6.5	64.5	37.0	41.0	41.0	6	14	49.0	54.0	6	14	35.0	37.0	6	6.5	6	6.5	60.4	147	159	171	6	6	44.0	50.0	5	12	5	6	0
28 FT	18	20	15	10	6	7	6	6.5	64.9	42.0	42.0	42.0	6	13	48.0	54.0	6	13	34.0	36.0	6	6.5	6	6.5	60.3	148	160	172	6	6	44.0	50.0	5	12	6	8	0
30 FT	19	21	15	10	6	6.5	6	6.5	65.1	43.0	43.0	43.0	6	13	48.0	54.0	6	13	33.0	35.0	6	6.5	6	6.5	60.4	149	161	173	7	7.5	47.0	53.0	5	12	6	8	0
32 FT	20	22	16	10	6	6.5	6	6.5	65.5	44.0	44.0	44.0	6	12	48.0	53.0	6	12	33.0	34.0	6	6	6	7	60.5	150	162	174	7	7.5	47.0	53.0	5	12	6	8	0
34 FT	20	23	16	10	6	6.5	6	6.5	63.5	44.0	44.0	44.0	6	12	47.0	53.0	6	12	33.0	35.0	6	6	6	7.5	58.9	151	163	175	7	7.5	46.0	53.0	5	12	6	8	0
36 FT	21	24	16	10	6	6	6	6	63.9	45.0	45.0	45.0	6	12	47.0	53.0	6	12	32.0	34.0	6	6	6	7	59.1	152	164	176	7	7.5	46.0	53.0	5	12	6	8	0
38 FT	22	24	17	10	6	6	6	6	64.4	46.0	46.0	46.0	7	15	52.0	58.0	7	15	37.0	38.0	6	6	6	7	59.0	152	164	176	7	7	46.0	53.0	5	12	6	7.5	0
40 FT	23	25	17	10	6	6	6	6	64.6	47.0	47.0	47.0	7	15	52.0	57.0	7	15	36.0	37.0	6	6	6	7	59.3	153	165	177	7	7	46.0	53.0	5	12	6	7.5	0
42 FT	23	26	18	10	7	7.5	6	6	65.0	47.0	47.0	47.0	7	15	52.0	57.0	7	15	37.0	38.0	7	8	6	6.5	59.6	154	166	178	7	7	46.0	54.0	5	12	6	7	0
44 FT	24	27	19	10	7	7.5	6	6	65.8	44.0	48.0	48.0	7	15	52.0	57.0	7	15	36.0	37.0	7	8	6	6.5	60.0	155	167	179	7	7	46.0	54.0	5	12	6	7	0
46 FT	24	27	19	10	7	7	6	6	65.6	48.0	48.0	48.0	7	14	52.0	57.0	7	14	36.0	38.0	7	7.5	6	6.5	59.9	155	167	179	7	6.5	46.0	54.0	5	12	6	6.5	0
48 FT	25	28	20	10	7	7	6	6	66.4	45.0	49.0	49.0	7	14	52.0	56.0	7	14	36.0	37.0	7	7.5	6	6	60.4	156	168	180	7	6.5	46.0	54.0	5	12	6	6.5	0
50 FT	26	29	20	10	7	7	7	7.5	71.6	50.0	50.0	50.0	7	15	51.0	55.0	7	15	36.0	37.0	7	7.5	6	6	60.6	157	169	181	7	6.5	47.0	54.0	5	12	6	6.5	0

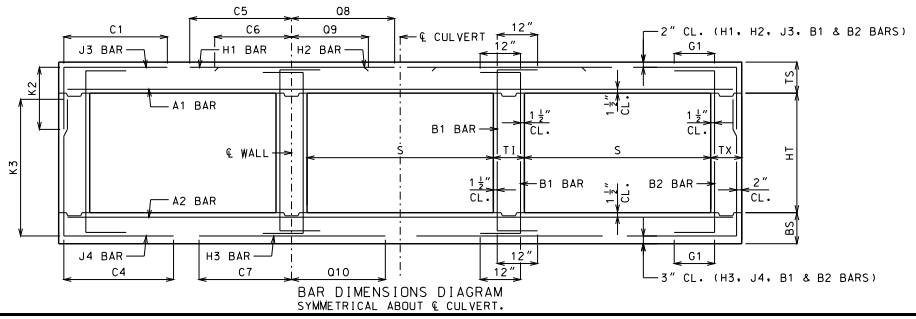

BAR DIMENSIONS DIAGRAM
SYMMETRICAL ABOUT ℄ CULVERT.

GENERAL NOTES:

IF DESIGN FILL IS BETWEEN TABULATED DESIGN FILLS, USE THE NEXT GREATER TABULATED DESIGN FILL, EXCEPT FOR DESIGN FILLS BETWEEN 2 FEET AND 4 FEET. FOR DESIGN FILLS BETWEEN 2 FEET AND 4 FEET USE THE GREATER MEMBER THICKNESS, AREA OF REINFORCEMENT AND BAR DIMENSIONS FROM THE 2 FEET AND 4 FEET TABULATED DESIGN FILLS. AREA OF REINFORCEMENT EQUALS BAR AREA PER FOOT SPACING.

SPECIAL DESIGNS ARE REQUIRED WHEN THE DESIGN FILL IS LESS THAN 1 FOOT OR GREATER THAN 50 FEET.

DIMENSIONS ARE IN INCHES UNLESS OTHERWISE SPECIFIED.

DESIGN FILLS ARE MEASURED FROM THE TOP OF TOP SLAB TO THE TOP OF EARTH FILL OR ROADWAY.

CULVERTS MEET STRENGTH AND SERVICEABILITY REQUIREMENTS FOR THE DESIGN VEHICULAR LIVE LOAD HL-93 MINUS THE LANE LOAD.

MISSOURI HIGHWAYS AND TRANSPORTATION COMMISSION
105 WEST CAPITOL
JEFFERSON CITY, MO 65102
1-888-ASK-MODOT (1-888-275-6636)

STATE OF MISSOURI
DENNIS W. HECKMAN
NUMBER PE-27141
PROFESSIONAL ENGINEER
THIS SHEET HAS BEEN SIGNED, SEALED AND DATED ELECTRONICALLY.

CONCRETE TRIPLE BOX CULVERT

MEMBER THICKNESS
BAR SIZE, SPACING & DIMENSIONS

SPAN (S): 10 FEET
HEIGHT (HT): 11 THRU 13 FEET

DATE EFFECTIVE: 12/01/2011
DATE PREPARED: 9/29/2011

703.87

SHEET NO.
15 OF 27

IF A SEAL IS PRESENT ON THIS SHEET IT HAS BEEN ELECTRONICALLY SEALED AND DATED.

SPAN (S) = 11 FT HEIGHT (HT) = 6 FT OR 7 FT OR 8 FT

DESIGN FILL	MEMBER THICKNESS				TOP SLAB BARS														BOTTOM SLAB BARS												WALL BARS				
					A1 BARS		J3 BARS						H1 BARS				H2 BARS				A2 BARS		J4 BARS						H3 BARS				B1 BARS		B2 BARS	
	TS	BS	TX	TI	SIZE	SPA.	SIZE	SPA.	C1	K2 HT=6′	K2 HT=7′	K2 HT=8′	SIZE	SPA.	C5	Q8	SIZE	SPA.	C6	Q9	SIZE	SPA.	SIZE	SPA.	C4	K3 HT=6′	K3 HT=7′	K3 HT=8′	SIZE	SPA.	C7	Q10	SIZE	SPA.	SIZE	SPA.	G1
1 FT	13	9	8	8	5	6.5	5	9	58.5	29.0	29.0	33.0	5	13	108.5	80.5	5	13	30.0	33.0	5	8.5	5	6	52.6	77	89	101	6	7	50.0	53.0	5	12	5	12	12
2 FT	14	9	8	8	5	6	4	6	55.5	30.0	30.0	30.0	5	14	106.5	80.5	5	14	29.0	28.0	5	7.5	6	6.5	50.8	77	89	101	6	6.5	49.0	52.0	5	12	5	12	12
4 FT	10	9	8	8	5	6.5	5	6	49.1	30.0	30.0	30.0	5	12	66.0	82.0	5	12	32.0	33.0	5	7.5	6	6.5	45.9	77	89	101	6	6	49.0	52.0	5	11.5	5	12	12
6 FT	10	10	8	8	5	7	5	6	42.8	30.0	30.0	30.0	5	12	53.0	63.0	5	12	30.0	31.0	5	7	5	6	39.8	78	90	102	6	6	47.0	52.0	5	12	5	12	12
8 FT	10	11	8	8	5	7	6	7	43.0	26.0	30.0	30.0	6	15	52.0	56.0	6	15	32.0	32.0	5	6.5	5	6.5	37.4	79	91	103	6	6.5	46.0	52.0	5	12	5	12	0
10 FT	11	12	8	8	5	7	5	6	37.6	27.0	31.0	31.0	6	15	50.0	55.0	6	15	31.0	32.0	5	6	5	7	35.6	80	92	104	6	6.5	45.0	52.0	5	12	5	12	0
12 FT	12	13	8	8	5	7	5	6.5	36.0	28.0	32.0	32.0	6	15	48.0	54.0	6	15	31.0	32.0	5	6	5	7.5	34.6	81	93	105	6	6.5	45.0	52.0	5	12	5	12	0
14 FT	13	14	8	8	5	6.5	5	7	34.6	33.0	33.0	33.0	6	15	47.0	54.0	6	15	31.0	32.0	6	8	5	7.5	33.8	82	94	106	6	6.5	44.0	53.0	5	12	5	12	0
16 FT	14	15	8	8	5	6	5	7	33.6	34.0	34.0	34.0	6	14	46.0	53.0	6	14	30.0	32.0	6	7.5	5	7.5	33.1	83	95	107	6	6.5	44.0	53.0	5	12	5	12	0
18 FT	15	16	8	8	6	8	5	6.5	37.9	35.0	35.0	35.0	6	14	51.0	59.0	6	14	36.0	38.0	6	7	5	7.5	32.6	84	96	108	6	6.5	44.0	53.0	5	12	5	11	0
20 FT	16	17	8	8	6	8	5	6.5	37.3	36.0	36.0	36.0	6	14	51.0	59.0	6	14	36.0	38.0	6	7	5	7	32.1	85	97	109	6	6.5	44.0	53.0	5	12	5	10	0
22 FT	17	18	8	8	6	7.5	5	6	36.9	37.0	37.0	37.0	6	14	50.0	59.0	6	14	36.0	38.0	6	6.5	5	6.5	31.9	86	98	110	6	6.5	44.0	53.0	5	12	5	9.5	0
24 FT	18	19	8	8	6	7	5	6	36.5	38.0	38.0	38.0	6	13	50.0	59.0	6	13	36.0	38.0	6	6	5	6.5	31.6	87	99	111	6	6	44.0	53.0	5	12	5	9.5	0
26 FT	19	21	8	8	6	6.5	6	7.5	40.4	39.0	39.0	43.0	6	13	50.0	59.0	6	13	35.0	38.0	6	6	6	7.5	34.4	89	101	113	7	7.5	47.0	56.0	5	12	5	9.5	0
28 FT	20	22	9	8	6	6.5	5	6	37.1	40.0	40.0	40.0	6	12	49.0	58.0	6	12	35.0	37.0	6	6	5	6	31.9	90	102	114	7	7.5	47.0	56.0	5	12	5	8.5	0
30 FT	21	23	10	8	6	6	5	6.5	37.9	41.0	41.0	41.0	6	12	49.0	58.0	6	12	34.0	37.0	7	8	5	6.5	32.4	91	103	115	7	7	47.0	56.0	5	12	5	8.5	0
32 FT	22	24	10	8	6	6	5	6.5	37.8	42.0	42.0	42.0	7	15	54.0	63.0	7	15	39.0	41.0	7	7.5	5	6.5	32.5	92	104	116	7	7	47.0	57.0	5	12	5	8	0
34 FT	23	25	10	8	7	7.5	5	6.5	37.8	43.0	43.0	43.0	7	15	54.0	63.0	7	15	38.0	40.0	7	7.5	5	6	32.5	93	105	117	7	6.5	47.0	57.0	5	12	5	8	0
36 FT	24	25	10	8	7	7.5	5	6	36.5	44.0	44.0	44.0	7	14	54.0	62.0	7	14	37.0	39.0	7	7	5	6	31.6	93	105	117	7	6.5	47.0	56.0	5	12	5	8	0
38 FT	25	26	10	8	7	7	5	6	36.6	45.0	45.0	45.0	7	14	53.0	62.0	7	14	37.0	38.0	7	7	5	6	31.8	94	106	118	7	6.5	47.0	56.0	5	12	5	8	0
40 FT	25	27	10	8	7	6.5	5	6	36.8	45.0	45.0	45.0	7	13	53.0	62.0	7	13	37.0	39.0	7	7	6	7	34.6	95	107	119	7	6.5	46.0	56.0	5	12	5	8	0
42 FT	26	28	10	8	7	7	6	7	40.8	50.0	50.0	50.0	7	13	53.0	62.0	7	13	37.0	38.0	7	7	6	7	34.9	96	108	120	7	6.5	46.0	56.0	5	12	5	8	0
44 FT	27	29	10	8	7	6.5	6	7	40.9	51.0	51.0	51.0	7	13	53.0	61.0	7	13	36.0	37.0	7	7	6	6.5	35.0	97	109	121	7	6.5	46.0	56.0	5	12	5	7.5	0
46 FT	28	29	11	8	7	6.5	6	7.5	41.6	52.0	52.0	52.0	7	13	53.0	61.0	7	13	36.0	37.0	7	6	6	7.5	35.6	97	109	121	7	6	47.0	57.0	5	12	5	7.5	0
48 FT	28	30	11	8	7	6	6	7.5	41.8	52.0	52.0	52.0	7	12	53.0	61.0	7	12	36.0	37.0	7	6.5	6	7	35.6	98	110	122	7	6	47.0	57.0	5	12	5	7.5	0
50 FT	29	31	11	8	7	6	6	7	41.9	53.0	53.0	53.0	7	12	53.0	60.0	7	12	36.0	37.0	7	6.5	6	7	35.9	99	111	123	7	6	47.0	57.0	5	12	5	7.5	0

SPAN (S) = 11 FT HEIGHT (HT) = 9 FT OR 10 FT OR 11 FT

DESIGN FILL	MEMBER THICKNESS				TOP SLAB BARS														BOTTOM SLAB BARS												WALL BARS				
					A1 BARS		J3 BARS						H1 BARS				H2 BARS				A2 BARS		J4 BARS						H3 BARS				B1 BARS		B2 BARS	
	TS	BS	TX	TI	SIZE	SPA.	SIZE	SPA.	C1	K2 HT=9′	K2 HT=10′	K2 HT=11′	SIZE	SPA.	C5	Q8	SIZE	SPA.	C6	Q9	SIZE	SPA.	SIZE	SPA.	C4	K3 HT=9′	K3 HT=10′	K3 HT=11′	SIZE	SPA.	C7	Q10	SIZE	SPA.	SIZE	SPA.	G1
1 FT	13	9	9	9	5	6.5	5	8	59.3	33.0	33.0	33.0	5	13	109.5	81.5	5	13	31.0	33.0	5	7.5	6	6	74.5	113	125	137	6	7	51.0	53.0	5	11.5	5	10.5	12
2 FT	14	10	9	9	5	6	5	8	59.3	34.0	34.0	34.0	5	14	109.5	81.5	5	14	29.0	28.0	5	7.5	6	7	70.6	114	126	138	5	6	47.0	50.0	5	12	5	10.5	12
4 FT	10	10	9	9	5	6.5	5	6	59.3	30.0	30.0	30.0	5	13	109.5	83.0	5	13	32.0	33.0	5	7	6	6.5	64.1	114	126	138	6	6.5	50.0	53.0	5	11.5	5	9.5	12
6 FT	10	10	9	9	5	7	5	6	56.6	30.0	30.0	30.0	5	12	55.0	61.0	5	12	30.0	31.0	5	7	6	6	57.8	114	126	138	6	6	48.0	52.0	5	12	5	9.5	12
8 FT	10	11	9	9	5	7	6	7.5	55.5	30.0	30.0	34.0	6	15	53.0	56.0	6	15	32.0	33.0	5	6.5	6	6	55.6	115	127	139	6	6	47.0	52.0	5	12	5	9	0
10 FT	11	12	9	9	5	7	6	7	53.5	31.0	35.0	35.0	6	15	51.0	55.0	6	15	32.0	33.0	5	6	6	6	53.8	116	128	140	6	6.5	46.0	52.0	5	12	5	8.5	0
12 FT	12	13	9	9	5	7	6	6.5	51.9	32.0	36.0	36.0	6	15	49.0	54.0	6	15	31.0	33.0	5	6	6	6	52.4	117	129	141	6	6.5	46.0	52.0	5	12	5	8.5	0
14 FT	13	14	9	9	5	6.5	6	6	50.5	33.0	37.0	37.0	6	15	48.0	53.0	6	15	31.0	33.0	6	8	6	6	51.3	118	130	142	6	6.5	45.0	52.0	5	12	5	8.5	0
16 FT	14	15	10	9	5	6	6	7	49.9	34.0	34.0	38.0	6	15	47.0	53.0	6	15	31.0	33.0	6	7.5	6	7	50.4	119	131	143	6	6.5	45.0	52.0	5	12	5	8	0
18 FT	15	16	10	9	6	8	6	7	54.9	35.0	35.0	39.0	6	15	52.0	59.0	6	15	37.0	39.0	6	7	6	7	49.6	120	132	144	6	6.5	45.0	53.0	5	12	5	8	0
20 FT	16	17	11	9	6	8	6	7.5	54.8	36.0	36.0	40.0	6	14	52.0	58.0	6	14	36.0	39.0	6	7	6	8	49.3	121	133	145	6	6.5	45.0	53.0	5	12	5	7.5	0
22 FT	17	18	12	9	6	7.5	6	8	54.8	37.0	37.0	37.0	6	14	51.0	58.0	6	14	36.0	39.0	6	6.5	5	6	45.9	122	134	146	6	6.5	45.0	53.0	5	12	5	7.5	0
24 FT	18	20	12	9	6	7	6	7.5	54.4	38.0	38.0	38.0	6	13	51.0	58.0	6	13	36.0	38.0	6	6	5	6	45.8	124	136	148	6	6	45.0	53.0	5	12	5	7	0
26 FT	19	21	12	9	6	6.5	6	7	53.9	39.0	39.0	43.0	6	13	50.0	58.0	6	13	35.0	38.0	6	6	6	8.5	48.4	125	137	149	7	7.5	48.0	56.0	5	12	5	7	0
28 FT	20	22	13	9	6	6.5	6	7.5	54.3	40.0	40.0	40.0	6	12	50.0	58.0	6	12	35.0	37.0	6	6	5	6	45.4	126	138	150	7	7.5	48.0	57.0	5	12	5	6.5	0
30 FT	21	23	13	9	6	6	6	7	54.1	41.0	41.0	41.0	6	12	50.0	57.0	6	12	34.0	36.0	7	8	5	6	45.4	127	139	151	7	7	48.0	57.0	5	12	5	6.5	0
32 FT	22	24	13	9	6	6	6	6.5	54.1	42.0	42.0	46.0	7	15	54.0	62.0	7	15	39.0	41.0	7	7.5	6	8	48.4	128	140	152	7	7	48.0	57.0	5	12	5	6.5	0
34 FT	23	25	14	9	7	7.5	6	7	54.8	43.0	43.0	43.0	7	15	54.0	62.0	7	15	38.0	40.0	7	7.5	5	6	45.8	129	141	153	7	6.5	48.0	57.0	5	12	5	6	0
36 FT	23	25	14	9	7	7	6	7	53.3	43.0	43.0	43.0	7	14	54.0	62.0	7	14	38.0	40.0	7	7	5	6	44.1	129	141	153	7	6.5	48.0	57.0	5	12	5	6	0
38 FT	24	26	14	9	7	7.5	6	7	53.4	44.0	44.0	44.0	7	14	54.0	61.0	7	14	38.0	40.0	7	7	5	6	44.3	130	142	154	7	6.5	48.0	57.0	5	12	5	6	0
40 FT	25	27	14	9	7	7	6	6.5	53.4	45.0	45.0	45.0	7	14	54.0	61.0	7	14	37.0	39.0	7	7	5	6	44.5	131	143	155	7	6.5	48.0	57.0	5	12	5	6	0
42 FT	26	28	15	9	7	7	6	7	54.3	46.0	50.0	50.0	7	13	54.0	60.0	7	13	37.0	38.0	7	7	6	8	48.0	132	144	156	7	6	48.0	57.0	5	12	6	8	0
44 FT	27	29	15	9	7	6.5	6	6.5	54.3	51.0	51.0	51.0	7	13	53.0	60.0	7	13	36.0	38.0	7	7	6	8	48.1	133	145	157	7	6	48.0	57.0	5	12	6	8	0
46 FT	27	30	15	9	7	6.5	6	6	54.4	51.0	51.0	51.0	7	13	53.0	60.0	7	13	37.0	38.0	7	7	6	8	48.1	134	146	158	7	6	48.0	57.0	5	12	6	8	0
48 FT	28	30	16	9	7	6.5	6	6.5	55.0	52.0	52.0	52.0	7	13	53.0	59.0	7	13	36.0	37.0	7	6	6	7.5	48.5	134	146	158	7	6	48.0	57.0	5	12	6	8	0
50 FT	29	31	16	9	7	6.5	6	6.5	55.1	53.0	53.0	53.0	7	13	53.0	59.0	7	13	36.0	37.0	7	6.5	6	7.5	48.8	135	147	159	7	6	48.0	57.0	5	12	6	8	0

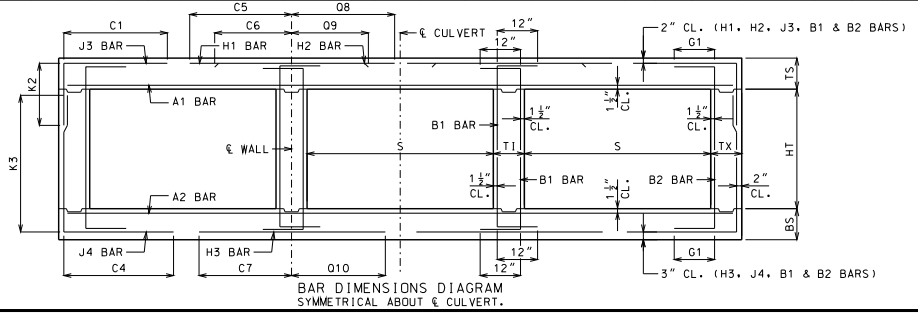

BAR DIMENSIONS DIAGRAM
SYMMETRICAL ABOUT ℄ CULVERT.

GENERAL NOTES:

IF DESIGN FILL IS BETWEEN TABULATED DESIGN FILLS, USE THE NEXT GREATER TABULATED DESIGN FILL, EXCEPT FOR DESIGN FILLS BETWEEN 2 FEET AND 4 FEET. FOR DESIGN FILLS BETWEEN 2 FEET AND 4 FEET USE THE GREATER MEMBER THICKNESS, AREA OF REINFORCEMENT AND BAR DIMENSIONS FROM THE 2 FEET AND 4 FEET TABULATED DESIGN FILLS. AREA OF REINFORCEMENT EQUALS BAR AREA PER FOOT SPACING.

SPECIAL DESIGNS ARE REQUIRED WHEN THE DESIGN FILL IS LESS THAN 1 FOOT OR GREATER THAN 50 FEET.

DIMENSIONS ARE IN INCHES UNLESS OTHERWISE SPECIFIED.

DESIGN FILLS ARE MEASURED FROM THE TOP OF TOP SLAB TO THE TOP OF EARTH FILL OR ROADWAY.

CULVERTS MEET STRENGTH AND SERVICEABILITY REQUIREMENTS FOR THE DESIGN VEHICULAR LIVE LOAD HL-93 MINUS THE LANE LOAD.

MISSOURI HIGHWAYS AND TRANSPORTATION COMMISSION
105 WEST CAPITOL
JEFFERSON CITY, MO 65102
1-888-ASK-MODOT (1-888-275-6636)

STATE OF MISSOURI — DENNIS W. HECKMANN — NUMBER PE-27141 — PROFESSIONAL ENGINEER
THIS SHEET HAS BEEN SIGNED, SEALED AND DATED ELECTRONICALLY.

CONCRETE TRIPLE BOX CULVERT

MEMBER THICKNESS
BAR SIZE, SPACING & DIMENSIONS

SPAN (S): 11 FEET
HEIGHT (HT): 6 THRU 11 FEET

DATE EFFECTIVE: 12/01/2011
DATE PREPARED: 9/29/2011

703.87

SHEET NO. 16 OF 27

IF A SEAL IS PRESENT ON THIS SHEET IT HAS BEEN ELECTRONICALLY SEALED AND DATED.

SPAN (S) = 11 FT HEIGHT (HT) = 12 FT OR 13 FT OR 14 FT

DESIGN FILL	MEMBER THICKNESS				TOP SLAB BARS																BOTTOM SLAB BARS														WALL BARS				
					A1 BARS		J3 BARS			K2			H1 BARS				H2 BARS				A2 BARS		J4 BARS			K3			H3 BARS				B1 BARS		B2 BARS		
	TS	BS	TX	TI	SIZE	SPA.	SIZE	SPA.	C1	HT=12'	HT=13'	HT=14'	SIZE	SPA.	C5	Q8	SIZE	SPA.	C6	Q9	SIZE	SPA.	SIZE	SPA.	C4	HT=12'	HT=13'	HT=14'	SIZE	SPA.	C7	Q10	SIZE	SPA.	SIZE	SPA.	G1
1 FT	13	10	10	11	5	6.5	5	6	60.3	33.0	33.0	33.0	5	13	110.5	82.5	5	13	31.0	33.0	5	7.5	6	6	89.3	150	162	174	5	6	51.0	51.0	5	10	5	8	12
2 FT	14	11	10	11	5	6	5	6	60.3	34.0	34.0	34.0	5	14	110.5	82.5	5	14	30.0	32.0	5	7.5	6	6	89.3	151	163	175	5	6	50.0	51.0	5	12	5	8	12
4 FT	10	11	11	11	5	7	5	6	60.9	30.0	30.0	30.0	5	13	110.5	80.0	5	13	33.0	33.0	5	7	6	6.5	85.9	151	163	175	5	6	49.0	51.0	5	12	5	7.5	12
6 FT	10	11	11	11	5	7.5	5	6	79.0	30.0	30.0	30.0	5	12	58.0	57.0	5	12	31.0	31.0	5	6.5	6	6	77.5	151	163	175	6	6.5	50.0	53.0	5	12	5	7.5	12
8 FT	10	11	12	11	5	7.5	6	7.5	70.1	30.0	30.0	34.0	6	15	54.0	55.0	6	15	33.0	33.0	5	6.5	6	6	70.9	151	163	175	6	6	48.0	52.0	5	12	5	7	0
10 FT	11	12	12	11	5	7.5	6	8	68.5	31.0	31.0	35.0	6	16	52.0	54.0	6	16	32.0	33.0	5	6	6	6	69.9	152	164	176	6	6	47.0	52.0	5	12	5	7	0
12 FT	12	13	12	11	5	7	6	8	67.4	32.0	32.0	36.0	6	16	50.0	53.0	6	16	32.0	33.0	5	6	6	6.5	69.0	153	165	177	6	6	47.0	52.0	5	12	5	7	0
14 FT	13	14	12	11	5	6.5	6	7	66.4	33.0	37.0	37.0	6	16	49.0	53.0	6	16	32.0	33.0	6	8	6	6.5	68.3	154	166	178	6	6.5	47.0	52.0	5	12	5	6.5	0
16 FT	14	15	13	11	5	6	6	7	64.9	34.0	38.0	38.0	6	15	48.0	52.0	6	15	32.0	33.0	6	7.5	6	7	66.6	155	167	179	6	6.5	47.0	52.0	5	12	5	6.5	0
18 FT	15	16	13	11	6	8	6	6.5	70.3	39.0	39.0	39.0	6	15	54.0	58.0	6	15	37.0	39.0	6	7	6	6	66.0	156	168	180	6	6.5	47.0	52.0	5	12	5	6.5	0
20 FT	15	17	14	11	6	8	6	6.5	68.4	39.0	39.0	39.0	6	14	53.0	58.0	6	14	37.0	39.0	6	7	6	6.5	65.1	157	169	181	6	6.5	46.0	53.0	5	12	5	6	0
22 FT	17	18	14	11	6	7.5	6	6.5	69.0	41.0	41.0	41.0	6	14	53.0	58.0	6	14	37.0	39.0	6	6	6	6	64.5	158	170	182	6	6	46.0	53.0	5	12	5	6	0
24 FT	18	20	15	11	6	7	6	6.5	68.9	42.0	42.0	42.0	6	13	52.0	58.0	6	13	36.0	38.0	6	6	6	6	64.6	160	172	184	6	6	46.0	53.0	5	12	6	8	0
26 FT	19	21	15	11	6	6.5	6	6	68.6	43.0	43.0	43.0	6	13	52.0	57.0	6	13	36.0	38.0	6	6	6	6	64.3	161	173	185	7	7.5	49.0	56.0	5	12	6	8	0
28 FT	20	22	16	11	6	6.5	6	6	68.6	44.0	44.0	44.0	6	12	51.0	57.0	6	12	35.0	37.0	6	6	6	6	63.9	162	174	186	7	7.5	49.0	56.0	5	12	6	8	0
30 FT	21	23	17	11	6	6	6	6	69.0	45.0	45.0	45.0	6	12	51.0	57.0	6	12	34.0	36.0	7	8	6	6.5	64.0	163	175	187	7	7	49.0	57.0	5	12	6	7.5	0
32 FT	21	24	17	11	6	6	6	6	68.6	45.0	45.0	45.0	6	12	51.0	57.0	6	12	35.0	37.0	7	7.5	6	6.5	64.1	164	176	188	7	7	49.0	57.0	5	12	6	7.5	0
34 FT	22	25	18	11	6	6	6	6	69.1	46.0	46.0	46.0	7	15	55.0	62.0	7	15	40.0	41.0	7	7.5	6	6.5	64.4	165	177	189	7	6.5	49.0	57.0	5	12	6	7	0
36 FT	23	26	18	11	7	7.5	7	7.5	74.3	47.0	47.0	47.0	7	15	55.0	61.0	7	15	39.0	41.0	7	7.5	6	6	64.5	166	178	190	7	6.5	49.0	57.0	5	12	6	7	0
38 FT	24	26	18	11	7	7.5	7	8	72.6	48.0	48.0	48.0	7	14	55.0	61.0	7	14	38.0	40.0	7	7	6	6.5	62.4	166	178	190	7	6.5	49.0	57.0	5	12	6	7	0
40 FT	25	27	18	11	7	7	7	7	72.9	49.0	49.0	49.0	7	14	55.0	61.0	7	14	38.0	39.0	7	7	6	6	62.6	167	179	191	7	6.5	49.0	57.0	5	12	6	7	0
42 FT	25	28	19	11	7	7	7	7	73.3	49.0	49.0	49.0	7	14	55.0	60.0	7	14	38.0	40.0	7	7	6	6	62.9	168	180	192	7	6.5	49.0	57.0	5	12	6	6.5	0
44 FT	26	29	20	11	7	7	7	7.5	74.0	50.0	50.0	50.0	7	13	54.0	60.0	7	13	38.0	39.0	7	7	6	6	63.3	169	181	193	7	6	49.0	57.0	5	12	6	6.5	0
46 FT	27	30	21	11	7	6.5	7	7.5	74.6	51.0	51.0	51.0	7	13	54.0	59.0	7	13	37.0	38.0	7	7	6	6	63.6	170	182	194	7	6	49.0	57.0	5	12	6	6	0
48 FT	27	30	21	11	7	6	7	7	74.5	51.0	51.0	51.0	7	12	54.0	59.0	7	12	37.0	39.0	7	6	6	6	63.5	170	182	194	7	6	49.0	57.0	5	12	6	6	0
50 FT	28	31	22	11	7	6.5	7	7	75.3	52.0	52.0	58.0	7	13	54.0	59.0	7	13	37.0	38.0	7	6.5	7	7.5	67.0	171	183	195	7	6	49.0	58.0	5	12	6	6	0

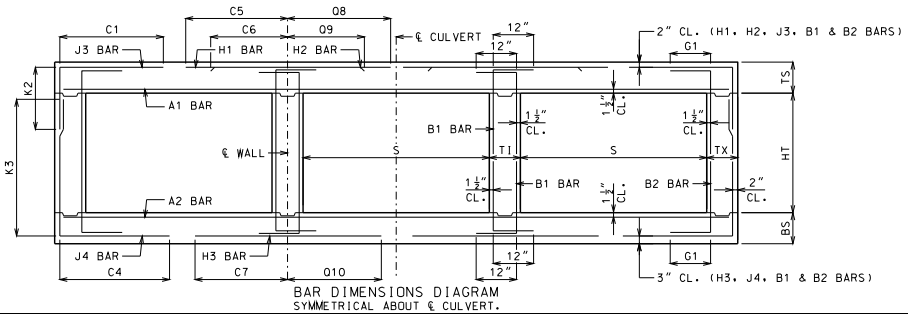

BAR DIMENSIONS DIAGRAM
SYMMETRICAL ABOUT ℄ CULVERT.

GENERAL NOTES:

IF DESIGN FILL IS BETWEEN TABULATED DESIGN FILLS, USE THE NEXT GREATER TABULATED DESIGN FILL, EXCEPT FOR DESIGN FILLS BETWEEN 2 FEET AND 4 FEET. FOR DESIGN FILLS BETWEEN 2 FEET AND 4 FEET USE THE GREATER MEMBER THICKNESS, AREA OF REINFORCEMENT AND BAR DIMENSIONS FROM THE 2 FEET AND 4 FEET TABULATED DESIGN FILLS. AREA OF REINFORCEMENT EQUALS BAR AREA PER FOOT SPACING.

SPECIAL DESIGNS ARE REQUIRED WHEN THE DESIGN FILL IS LESS THAN 1 FOOT OR GREATER THAN 50 FEET.

DIMENSIONS ARE IN INCHES UNLESS OTHERWISE SPECIFIED.

DESIGN FILLS ARE MEASURED FROM THE TOP OF TOP SLAB TO THE TOP OF EARTH FILL OR ROADWAY.

CULVERTS MEET STRENGTH AND SERVICEABILITY REQUIREMENTS FOR THE DESIGN VEHICULAR LIVE LOAD HL-93 MINUS THE LANE LOAD.

MISSOURI HIGHWAYS AND TRANSPORTATION COMMISSION
105 WEST CAPITOL
JEFFERSON CITY, MO 65102
1-888-ASK-MODOT (1-888-275-6636)

STATE OF MISSOURI
DENNIS W. HECKMAN
NUMBER PE-27141
PROFESSIONAL ENGINEER
THIS SHEET HAS BEEN SIGNED, SEALED AND DATED ELECTRONICALLY.

CONCRETE TRIPLE BOX CULVERT

MEMBER THICKNESS
BAR SIZE, SPACING & DIMENSIONS

SPAN (S): 11 FEET
HEIGHT (HT): 12 THRU 14 FEET

DATE EFFECTIVE: 12/01/2011
DATE PREPARED: 9/29/2011

703.87

SHEET NO.
17 OF 27

IF A SEAL IS PRESENT ON THIS SHEET IT HAS BEEN ELECTRONICALLY SEALED AND DATED.

SPAN (S) = 12 FT HEIGHT (HT) = 6 FT OR 7 FT OR 8 FT

DESIGN FILL	MEMBER THICKNESS				TOP SLAB BARS														BOTTOM SLAB BARS												WALL BARS				
					A1 BARS		J3 BARS			K2			H1 BARS				H2 BARS				A2 BARS		J4 BARS			K3			H3 BARS				B1 BARS		B2 BARS		
	TS	BS	TX	TI	SIZE	SPA.	SIZE	SPA.	C1	HT=6′	HT=7′	HT=8′	SIZE	SPA.	C5	Q8	SIZE	SPA.	C6	Q9	SIZE	SPA.	SIZE	SPA.	C4	HT=6′	HT=7′	HT=8′	SIZE	SPA.	C7	Q10	SIZE	SPA.	SIZE	SPA.	G1
1 FT	14	9	8	8	5	6	4	6	59.1	30.0	30.0	30.0	5	12	114.5	86.5	5	12	31.0	34.0	5	7.5	6	7	54.6	77	89	101	6	6.5	53.0	56.0	5	12	5	12	12
2 FT	14	9	8	8	5	6	5	8.5	62.1	30.0	30.0	34.0	5	12	116.5	86.5	5	12	30.0	33.0	5	7.5	6	6.5	50.3	77	89	101	6	6	52.0	55.0	5	12	5	12	12
4 FT	11	10	8	8	5	6	5	6.5	48.9	31.0	31.0	31.0	5	12	69.0	88.0	5	12	33.0	35.0	5	7	5	6	42.6	78	90	102	6	6	51.0	56.0	5	12	5	12	12
6 FT	11	11	8	8	5	6.5	5	6.5	42.8	31.0	31.0	31.0	6	16	59.0	71.0	6	16	34.0	36.0	5	6.5	5	6.5	39.3	79	91	103	6	6.5	49.0	56.0	5	12	5	12	12
8 FT	11	12	8	8	5	6.5	5	6	39.9	31.0	31.0	31.0	6	14	55.0	61.0	6	14	33.0	34.0	5	6	5	7.5	36.6	80	92	104	6	6.5	48.0	56.0	5	12	5	12	0
10 FT	12	13	8	8	5	6.5	5	6.5	37.3	32.0	32.0	32.0	6	14	52.0	59.0	6	14	32.0	34.0	5	6	5	7.5	34.9	81	93	105	6	6	47.0	56.0	5	12	5	12	0
12 FT	13	14	8	8	5	6	5	7	35.4	33.0	33.0	33.0	6	14	51.0	58.0	6	14	32.0	34.0	6	8	5	8	33.8	82	94	106	6	6	47.0	56.0	5	12	5	12	0
14 FT	14	15	8	8	5	6	5	7	33.9	34.0	34.0	34.0	6	13	49.0	57.0	6	13	32.0	34.0	6	7.5	5	8	32.8	83	95	107	6	6	47.0	56.0	5	12	5	12	0
16 FT	15	16	8	8	6	8	5	6.5	37.9	35.0	35.0	35.0	6	13	55.0	63.0	6	13	37.0	40.0	6	7	5	8	32.1	84	96	108	6	6	46.0	56.0	5	12	5	12	0
18 FT	16	17	8	8	6	8	5	6.5	37.0	36.0	36.0	36.0	6	13	54.0	63.0	6	13	37.0	40.0	6	7	5	7	31.6	85	97	109	6	6	46.0	56.0	5	12	5	11.5	0
20 FT	17	18	8	8	6	7.5	5	6.5	36.4	37.0	37.0	37.0	6	12	53.0	63.0	6	12	37.0	40.0	6	6.5	5	6.5	31.1	86	98	110	6	6	46.0	56.0	5	12	5	10	0
22 FT	18	20	8	8	6	6.5	5	6	36.1	38.0	38.0	38.0	6	12	53.0	62.0	6	12	37.0	40.0	6	6	5	6	30.8	88	100	112	6	6	46.0	57.0	5	12	5	9.5	0
24 FT	20	21	8	8	6	6.5	6	7.5	39.5	44.0	44.0	44.0	6	12	52.0	62.0	6	12	36.0	39.0	7	8	6	7.5	33.8	89	101	113	7	7.5	49.0	59.0	5	12	5	9.5	0
26 FT	21	22	8	8	6	6	6	7	39.3	45.0	45.0	45.0	6	12	52.0	62.0	6	12	36.0	39.0	7	7.5	6	7	33.6	90	102	114	7	7.5	49.0	60.0	5	12	5	9.5	0
28 FT	22	23	8	8	6	6	6	6.5	39.0	46.0	46.0	46.0	7	15	57.0	67.0	7	15	41.0	44.0	7	7	6	6.5	33.4	91	103	115	7	7	49.0	60.0	5	12	5	8.5	0
30 FT	23	24	8	8	7	7.5	6	6	38.9	47.0	47.0	47.0	7	15	56.0	67.0	7	15	40.0	43.0	7	6.5	6	6	33.4	92	104	116	7	6.5	49.0	60.0	5	12	5	8	0
32 FT	24	25	9	8	7	7.5	6	7	39.8	48.0	48.0	48.0	7	14	56.0	66.0	7	14	40.0	42.0	7	6.5	6	7	34.0	93	105	117	7	6.5	49.0	60.0	5	12	5	8.5	0
34 FT	25	26	9	8	7	7	6	6.5	39.8	49.0	49.0	49.0	7	14	56.0	66.0	7	14	39.0	42.0	7	6	6	6.5	34.0	94	106	118	7	6	49.0	60.0	5	12	5	8	0
36 FT	26	27	9	8	7	7	6	6.5	39.8	50.0	50.0	50.0	7	13	56.0	66.0	7	13	39.0	41.0	7	6	6	6.5	34.1	95	107	119	7	6	49.0	60.0	5	12	5	7.5	0
38 FT	27	28	9	8	7	6.5	6	6	39.8	51.0	51.0	51.0	7	13	56.0	66.0	7	13	38.0	40.0	7	6	6	6	34.3	96	108	120	7	6	49.0	60.0	5	12	5	7	0
40 FT	28	29	9	8	7	6.5	6	6	38.9	52.0	52.0	52.0	7	12	56.0	65.0	7	12	37.0	39.0	7	6.5	6	6	33.4	97	109	121	8	7.5	55.0	66.0	5	12	5	7	0
42 FT	28	30	10	8	7	6	6	6.5	39.8	52.0	52.0	52.0	7	12	56.0	65.0	7	12	38.0	40.0	7	6.5	6	6.5	33.9	98	110	122	8	7.5	55.0	66.0	5	12	5	8	0
44 FT	29	31	10	8	7	6	6	6.5	39.9	53.0	53.0	53.0	7	12	55.0	64.0	7	12	38.0	39.0	7	6.5	6	6	34.0	99	111	123	8	7.5	55.0	66.0	5	12	5	7	0
46 FT	30	32	10	8	7	6	6	6	40.0	54.0	54.0	54.0	7	12	55.0	64.0	7	12	37.0	38.0	7	6	6	6	34.3	100	112	124	8	7.5	55.0	66.0	5	12	5	6.5	0
48 FT	31	33	10	8	8	7.5	6	6	40.1	55.0	55.0	55.0	8	15	63.0	71.0	8	15	45.0	46.0	7	6	7	6.5	37.5	101	113	125	8	7.5	55.0	66.0	5	12	5	6.5	0
50 FT	32	34	11	8	8	7.5	6	6.5	41.0	56.0	56.0	56.0	7	12	55.0	63.0	7	12	37.0	38.0	7	6	6	6	35.1	102	114	126	8	7	55.0	66.0	5	12	5	7	0

SPAN (S) = 12 FT HEIGHT (HT) = 9 FT OR 10 FT OR 11 FT

DESIGN FILL	MEMBER THICKNESS				TOP SLAB BARS														BOTTOM SLAB BARS												WALL BARS				
					A1 BARS		J3 BARS			K2			H1 BARS				H2 BARS				A2 BARS		J4 BARS			K3			H3 BARS				B1 BARS		B2 BARS		
	TS	BS	TX	TI	SIZE	SPA.	SIZE	SPA.	C1	HT=9′	HT=10′	HT=11′	SIZE	SPA.	C5	Q8	SIZE	SPA.	C6	Q9	SIZE	SPA.	SIZE	SPA.	C4	HT=9′	HT=10′	HT=11′	SIZE	SPA.	C7	Q10	SIZE	SPA.	SIZE	SPA.	G1
1 FT	14	10	8	9	5	6	5	7.5	62.3	34.0	34.0	34.0	5	12	117.5	87.5	5	12	31.0	35.0	5	7.5	6	6	79.4	114	126	138	5	6	51.0	54.0	5	12	5	10	12
2 FT	14	10	9	9	5	6	5	8	62.9	34.0	34.0	34.0	5	12	117.5	87.5	5	12	30.0	33.0	5	7	6	6.5	68.6	114	126	138	6	6.5	53.0	56.0	5	12	5	10.5	12
4 FT	11	10	9	9	5	6	6	7	75.1	31.0	31.0	35.0	5	12	82.0	89.0	5	12	34.0	36.0	5	7	6	6	61.3	114	126	138	6	6	52.0	56.0	5	12	5	10	12
6 FT	11	11	9	9	5	6.5	6	7	59.8	31.0	35.0	35.0	6	16	61.0	70.0	6	16	35.0	36.0	5	6.5	6	6	57.5	115	127	139	6	6	50.0	56.0	5	12	5	9.5	12
8 FT	11	12	9	9	5	6.5	6	7	55.3	31.0	31.0	35.0	6	15	56.0	60.0	6	15	33.0	34.0	5	6	6	6.5	54.5	116	128	140	6	6	49.0	56.0	5	12	5	9	0
10 FT	12	13	9	9	5	6.5	6	6.5	52.5	32.0	32.0	36.0	6	14	54.0	59.0	6	14	33.0	34.0	5	6	6	6.5	52.4	117	129	141	6	6	48.0	56.0	5	12	5	8.5	0
12 FT	13	14	9	9	5	6	6	6.5	50.4	33.0	33.0	37.0	6	14	52.0	58.0	6	14	32.0	34.0	6	8	6	6.5	50.6	118	130	142	6	6	48.0	56.0	5	12	5	8.5	0
14 FT	14	15	9	9	5	6	6	6.5	48.8	34.0	34.0	38.0	6	14	51.0	57.0	6	14	32.0	34.0	6	7.5	6	6.5	49.4	119	131	143	6	6	48.0	56.0	5	12	5	8.5	0
16 FT	15	16	10	9	6	8	6	7.5	54.3	35.0	35.0	39.0	6	13	55.0	63.0	6	13	38.0	40.0	6	7	6	7.5	48.5	120	132	144	6	6	47.0	56.0	5	12	5	8	0
18 FT	16	17	11	9	6	8	6	8	54.3	36.0	36.0	36.0	6	13	55.0	62.0	6	13	38.0	40.0	6	7	5	6	45.4	121	133	145	6	6	47.0	56.0	5	12	5	8	0
20 FT	17	18	11	9	6	7.5	6	7.5	53.6	37.0	37.0	41.0	6	13	54.0	62.0	6	13	37.0	40.0	6	6	6	8	47.8	122	134	146	6	6	47.0	56.0	5	12	5	7.5	0
22 FT	18	20	11	9	6	7	6	6.5	53.3	38.0	38.0	42.0	6	12	54.0	62.0	6	12	37.0	40.0	6	6	6	7.5	47.5	124	136	148	6	6	47.0	57.0	5	12	5	7.5	0
24 FT	19	21	12	9	6	6.5	6	7	53.5	39.0	39.0	39.0	6	12	53.0	62.0	6	12	37.0	40.0	7	8	5	6	44.5	125	137	149	7	7.5	50.0	60.0	5	12	5	7	0
26 FT	20	22	13	9	6	6	6	7.5	53.9	40.0	40.0	40.0	6	12	53.0	61.0	6	12	37.0	40.0	7	7.5	5	6	44.6	126	138	150	7	7.5	50.0	60.0	5	12	5	7	0
28 FT	22	23	13	9	6	6	6	7.5	53.5	42.0	42.0	42.0	7	15	57.0	66.0	7	15	40.0	43.0	7	7	5	6	44.5	127	139	151	7	7	50.0	60.0	5	12	5	6.5	0
30 FT	23	25	13	9	7	7.5	6	7	53.4	43.0	43.0	43.0	7	15	57.0	66.0	7	15	40.0	42.0	7	7	5	6	44.4	129	141	153	7	6.5	50.0	60.0	5	12	5	6.5	0
32 FT	24	26	13	9	7	7.5	6	6.5	53.3	44.0	44.0	48.0	7	14	57.0	66.0	7	14	40.0	42.0	7	7	6	8.5	47.4	130	142	154	7	6.5	50.0	60.0	5	12	5	6.5	0
34 FT	25	26	13	9	7	7	6	6	53.0	45.0	45.0	49.0	7	14	57.0	65.0	7	14	39.0	41.0	7	6	6	7.5	47.3	130	142	154	7	6	50.0	60.0	5	12	5	6.5	0
36 FT	26	28	14	9	7	7	6	6.5	53.9	46.0	46.0	46.0	7	13	56.0	65.0	7	13	38.0	40.0	7	7	5	6	44.9	132	144	156	7	6	50.0	60.0	5	12	5	6	0
38 FT	26	29	15	9	7	6.5	6	6.5	54.6	50.0	50.0	50.0	7	13	56.0	65.0	7	13	39.0	41.0	7	6.5	6	8	48.1	133	145	157	7	6	50.0	60.0	5	12	6	8.5	0
40 FT	27	29	15	9	7	6.5	6	7	53.4	51.0	51.0	51.0	7	13	56.0	64.0	7	13	38.0	40.0	7	6	6	8	46.9	133	145	157	8	7.5	56.0	66.0	5	12	5	6	0
42 FT	28	30	15	9	7	6.5	6	6.5	53.4	52.0	52.0	52.0	7	12	56.0	64.0	7	12	38.0	39.0	7	6	6	8	47.0	134	146	158	8	7.5	56.0	66.0	5	12	6	8	0
44 FT	29	31	15	9	7	6	6	6.5	53.4	53.0	53.0	53.0	7	12	56.0	63.0	7	12	37.0	39.0	7	6	6	7.5	47.1	135	147	159	8	7.5	56.0	66.0	5	12	6	8	0
46 FT	30	32	15	9	7	6	6	6.5	53.5	54.0	54.0	54.0	7	12	55.0	63.0	7	12	37.0	38.0	7	6	6	7	47.4	136	148	160	8	7.5	56.0	66.0	5	12	6	8	0
48 FT	31	33	15	9	7	6	6	6	53.5	55.0	55.0	55.0	7	12	55.0	62.0	7	12	37.0	38.0	7	6	6	7	47.5	137	149	161	8	7	56.0	66.0	5	12	6	8	0
50 FT	31	34	16	9	8	7.5	6	6	54.4	55.0	55.0	55.0	7	12	55.0	62.0	7	12	37.0	38.0	7	6	6	7	47.9	138	150	162	8	7	56.0	67.0	5	12	6	8	0

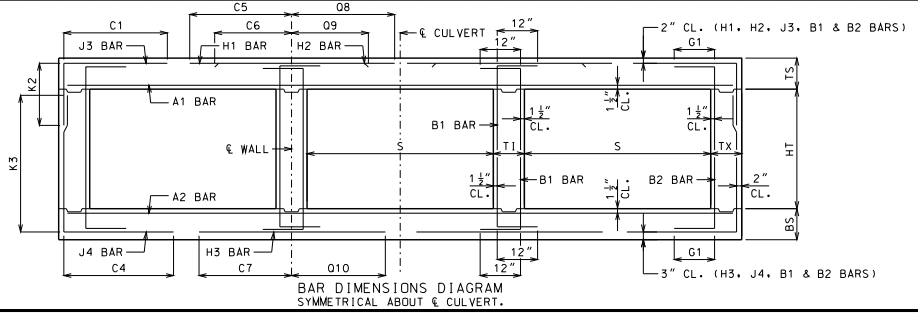

BAR DIMENSIONS DIAGRAM
SYMMETRICAL ABOUT ℄ CULVERT.

GENERAL NOTES:

IF DESIGN FILL IS BETWEEN TABULATED DESIGN FILLS, USE THE NEXT GREATER TABULATED DESIGN FILL, EXCEPT FOR DESIGN FILLS BETWEEN 2 FEET AND 4 FEET. FOR DESIGN FILLS BETWEEN 2 FEET AND 4 FEET USE THE GREATER MEMBER THICKNESS, AREA OF REINFORCEMENT AND BAR DIMENSIONS FROM THE 2 FEET AND 4 FEET TABULATED DESIGN FILLS. AREA OF REINFORCEMENT EQUALS BAR AREA PER FOOT SPACING.

SPECIAL DESIGNS ARE REQUIRED WHEN THE DESIGN FILL IS LESS THAN 1 FOOT OR GREATER THAN 50 FEET.

DIMENSIONS ARE IN INCHES UNLESS OTHERWISE SPECIFIED.

DESIGN FILLS ARE MEASURED FROM THE TOP OF TOP SLAB TO THE TOP OF EARTH FILL OR ROADWAY.

CULVERTS MEET STRENGTH AND SERVICEABILITY REQUIREMENTS FOR THE DESIGN VEHICULAR LIVE LOAD HL-93 MINUS THE LANE LOAD.

MISSOURI HIGHWAYS AND TRANSPORTATION COMMISSION
105 WEST CAPITOL
JEFFERSON CITY, MO 65102
1-888-ASK-MODOT (1-888-275-6636)

STATE OF MISSOURI — DENNIS W. HECKMAN — NUMBER PE-27141 — PROFESSIONAL ENGINEER
THIS SHEET HAS BEEN SIGNED, SEALED AND DATED ELECTRONICALLY.

CONCRETE TRIPLE BOX CULVERT

MEMBER THICKNESS
BAR SIZE, SPACING & DIMENSIONS

SPAN (S): 12 FEET
HEIGHT (HT): 6 THRU 11 FEET

DATE EFFECTIVE: 12/01/2011
DATE PREPARED: 9/29/2011

703.87

SHEET NO.
18 OF 27

IF A SEAL IS PRESENT ON THIS SHEET IT HAS BEEN ELECTRONICALLY SEALED AND DATED.

SPAN (S) = 12 FT HEIGHT (HT) = 12 FT OR 13 FT

DESIGN FILL	MEMBER THICKNESS				TOP SLAB BARS														BOTTOM SLAB BARS										WALL BARS				
					A1 BARS		J3 BARS					H1 BARS				H2 BARS				A2 BARS		J4 BARS				H3 BARS				B1 BARS		B2 BARS	
	TS	BS	TX	TI	SIZE	SPA.	SIZE	SPA.	C1	K2 HT=12'	K2 HT=13'	SIZE	SPA.	C5	Q8	SIZE	SPA.	C6	Q9	SIZE	SPA.	SIZE	SPA.	C4	K3 HT=12'	K3 HT=13'	SIZE	SPA.	C7	Q10	SIZE	SPA.	SIZE	SPA.	G1
1 FT	14	10	10	10	5	6	5	7	63.8	34.0	34.0	5	12	118.5	87.5	5	12	32.0	35.0	5	7	6	6.5	89.1	150	162	6	7	55.0	57.0	5	12	5	8.5	12
2 FT	14	10	10	10	5	6	5	7	63.8	34.0	34.0	5	12	118.5	87.5	5	12	31.0	33.0	5	7	6	6	79.6	150	162	6	6.5	54.0	56.0	5	12	5	8	12
4 FT	11	11	10	10	5	6.5	5	6	63.8	31.0	31.0	5	12	118.5	89.0	5	12	34.0	35.0	5	6.5	6	6.5	76.3	151	163	6	6.5	53.0	57.0	5	12	5	8	12
6 FT	11	11	10	10	5	6.5	5	6	71.3	31.0	31.0	6	16	65.0	69.0	6	16	35.0	36.0	5	6.5	6	6	69.1	151	163	6	6	51.0	56.0	5	12	5	8	12
8 FT	11	12	10	10	5	6.5	6	7	65.4	31.0	35.0	6	15	57.0	60.0	6	15	34.0	35.0	5	6	6	6	66.4	152	164	6	6	50.0	56.0	5	12	5	8	0
10 FT	12	13	10	10	5	6.5	6	7	62.9	36.0	36.0	6	15	55.0	58.0	6	15	33.0	34.0	5	6	6	6	63.8	153	165	6	6	49.0	56.0	5	12	5	8	0
12 FT	13	14	11	10	5	6.5	6	7.5	61.1	33.0	37.0	6	14	53.0	57.0	6	14	33.0	34.0	6	8	6	7	62.0	154	166	6	6	49.0	56.0	5	12	5	7.5	0
14 FT	14	15	11	10	5	6	6	7	59.9	38.0	38.0	6	14	51.0	57.0	6	14	32.0	34.0	6	7.5	6	6	60.9	155	167	6	6	48.0	56.0	5	12	5	7.5	0
16 FT	15	16	12	10	6	8	6	7	65.0	39.0	39.0	6	14	56.0	62.0	6	14	38.0	40.0	6	7	6	7	59.9	156	168	6	6	48.0	56.0	5	12	5	7	0
18 FT	16	17	12	10	6	8	6	6.5	64.1	40.0	40.0	6	13	55.0	62.0	6	13	38.0	40.0	6	7	6	6	59.1	157	169	6	6	48.0	56.0	5	12	5	7	0
20 FT	17	18	13	10	6	7.5	6	6.5	63.8	41.0	41.0	6	13	55.0	61.0	6	13	38.0	40.0	6	6	6	7	58.5	158	170	6	6	48.0	56.0	5	12	5	6.5	0
22 FT	18	20	13	10	6	7	6	6	63.3	42.0	42.0	6	13	54.0	61.0	6	13	38.0	40.0	6	6	6	6.5	58.4	160	172	6	6	48.0	56.0	5	12	5	6.5	0
24 FT	19	21	14	10	6	6.5	6	6.5	63.1	39.0	43.0	6	12	54.0	61.0	6	12	37.0	40.0	7	8	6	7	58.0	161	173	7	7.5	51.0	60.0	5	12	5	6	0
26 FT	20	22	14	10	6	6.5	6	6	62.8	44.0	44.0	6	12	53.0	61.0	6	12	37.0	40.0	7	7.5	6	6.5	57.6	162	174	7	7.5	51.0	60.0	5	12	5	6	0
28 FT	21	23	15	10	6	6	6	6	62.9	45.0	45.0	6	12	53.0	61.0	6	12	37.0	40.0	7	7	6	7	57.4	163	175	7	7	51.0	60.0	5	12	6	8	0
30 FT	23	25	15	10	7	7.5	6	6	62.8	47.0	47.0	7	15	57.0	65.0	7	15	40.0	42.0	7	7	6	7	57.5	165	177	7	6.5	51.0	60.0	5	12	6	8	0
32 FT	23	26	16	10	7	7	6	6	63.1	47.0	47.0	7	14	57.0	65.0	7	14	41.0	43.0	7	7	6	7.5	57.5	166	178	7	6.5	51.0	60.0	5	12	6	8	0
34 FT	24	27	16	10	7	7	7	7.5	68.1	48.0	48.0	7	14	57.0	65.0	7	14	40.0	42.0	7	7	6	7	57.5	167	179	7	6	51.0	60.0	5	12	6	8	0
36 FT	25	28	17	10	7	7	6	6	63.6	49.0	49.0	7	14	57.0	64.0	7	14	40.0	42.0	7	7	6	7	57.8	168	180	7	6	51.0	60.0	5	12	6	7.5	0
38 FT	26	29	17	10	7	7	7	7.5	68.6	50.0	50.0	7	13	57.0	64.0	7	13	39.0	41.0	7	6.5	6	7	57.9	169	181	7	6	51.0	60.0	5	12	6	7.5	0
40 FT	27	29	17	10	7	6.5	7	8	66.8	51.0	51.0	7	13	56.0	63.0	7	13	38.0	40.0	7	6	6	7	55.9	169	181	8	7.5	57.0	66.0	5	12	6	7.5	0
42 FT	28	30	17	10	7	6.5	7	7	66.9	52.0	52.0	7	12	56.0	63.0	7	12	38.0	39.0	7	6	6	7	56.0	170	182	8	7.5	57.0	66.0	5	12	6	7.5	0
44 FT	29	31	18	10	7	6	7	7.5	67.8	53.0	53.0	7	12	56.0	62.0	7	12	37.0	38.0	7	6	6	6.5	56.4	171	183	8	7.5	57.0	66.0	5	12	6	7	0
46 FT	29	32	19	10	7	6	7	7.5	68.5	53.0	53.0	7	12	56.0	62.0	7	12	38.0	39.0	7	6	6	6.5	56.8	172	184	8	7	57.0	67.0	5	12	6	6.5	0
48 FT	30	33	19	10	7	6	7	7	68.5	54.0	54.0	7	12	56.0	61.0	7	12	37.0	38.0	7	6	6	6.5	56.9	173	185	8	7	57.0	67.0	5	12	6	6.5	0
50 FT	31	34	19	10	7	6	7	6.5	68.6	55.0	55.0	7	12	56.0	61.0	7	12	37.0	38.0	7	6	6	6.5	57.3	174	186	8	7	57.0	67.0	5	12	6	6.5	0

SPAN (S) = 12 FT HEIGHT (HT) = 14 FT OR 15 FT

DESIGN FILL	MEMBER THICKNESS				TOP SLAB BARS														BOTTOM SLAB BARS										WALL BARS				
					A1 BARS		J3 BARS					H1 BARS				H2 BARS				A2 BARS		J4 BARS				H3 BARS				B1 BARS		B2 BARS	
	TS	BS	TX	TI	SIZE	SPA.	SIZE	SPA.	C1	K2 HT=14'	K2 HT=15'	SIZE	SPA.	C5	Q8	SIZE	SPA.	C6	Q9	SIZE	SPA.	SIZE	SPA.	C4	K3 HT=14'	K3 HT=15'	SIZE	SPA.	C7	Q10	SIZE	SPA.	SIZE	SPA.	G1
1 FT	14	11	10	12	5	6	6	7.5	64.0	34.0	38.0	5	12	119.5	88.5	5	12	32.0	35.0	5	7	6	6	95.5	175	187	5	6	55.0	55.0	5	12	5	8	12
2 FT	14	12	10	12	5	6	6	7	64.0	34.0	38.0	5	12	119.5	88.5	5	12	31.0	34.0	5	7	6	6	95.5	176	188	5	6	54.0	55.0	5	12	5	8	12
4 FT	10	11	12	12	5	6	6	7.5	68.3	34.0	34.0	6	15	121.5	77.0	6	15	37.0	37.0	5	6.5	6	6	86.8	175	187	6	6.5	55.0	57.0	5	11	5	7	12
6 FT	10	12	12	12	5	6.5	6	7	80.0	34.0	34.0	6	15	61.0	61.0	6	15	35.0	35.0	5	6	6	6.5	83.1	176	188	6	6.5	53.0	57.0	5	12	5	7	12
8 FT	11	12	12	12	5	7	6	7.5	76.8	35.0	35.0	6	15	58.0	59.0	6	15	35.0	35.0	5	6	6	6	77.1	176	188	6	6	52.0	55.0	5	12	5	7	0
10 FT	12	13	12	12	5	6.5	6	7.5	74.4	36.0	36.0	6	15	56.0	58.0	6	15	34.0	35.0	5	6	6	6	75.5	177	189	6	6	51.0	55.0	5	12	5	6.5	0
12 FT	13	14	13	12	5	6.5	6	7.5	71.5	37.0	37.0	6	15	54.0	57.0	6	15	34.0	35.0	6	8	6	6	73.0	178	190	6	6	50.0	55.0	5	12	5	6.5	0
14 FT	14	15	13	12	5	6	6	6.5	70.3	38.0	38.0	6	14	52.0	56.0	6	14	33.0	35.0	6	7.5	6	6	72.0	179	191	6	6	50.0	55.0	5	12	5	6.5	0
16 FT	15	16	14	12	6	8	6	6.5	74.5	39.0	39.0	6	14	57.0	62.0	6	14	39.0	41.0	6	7	6	6.5	70.3	180	192	6	6	49.0	55.0	5	12	5	6	0
18 FT	15	17	15	12	6	7.5	6	6.5	72.4	39.0	39.0	6	13	56.0	61.0	6	13	39.0	40.0	6	6.5	6	6.5	69.0	181	193	6	6	49.0	56.0	5	12	6	8	0
20 FT	17	19	15	12	6	7.5	6	6	73.0	41.0	41.0	6	13	56.0	61.0	6	13	39.0	41.0	6	6	6	6	69.6	183	195	6	6	49.0	56.0	5	12	6	8	0
22 FT	18	20	16	12	6	7	6	6.5	72.8	42.0	42.0	6	13	55.0	61.0	6	13	39.0	41.0	6	6	6	6	68.4	184	196	6	6	49.0	56.0	5	12	6	8	0
24 FT	19	21	16	12	6	6.5	6	6	72.4	43.0	43.0	6	13	55.0	61.0	6	13	38.0	41.0	7	8	7	7.5	71.1	185	197	7	7.5	52.0	59.0	5	12	6	8	0
26 FT	20	22	16	12	6	6.5	7	7.5	77.1	44.0	50.0	6	12	55.0	61.0	6	12	38.0	40.0	7	7.5	7	7	70.8	186	198	7	7.5	52.0	60.0	5	12	6	8	0
28 FT	21	23	17	12	6	6	7	7.5	77.1	45.0	51.0	6	12	54.0	60.0	6	12	37.0	40.0	7	6.5	7	7.5	70.5	187	199	7	6.5	52.0	60.0	5	12	6	7.5	0
30 FT	22	25	18	12	6	6	7	7.5	77.3	46.0	46.0	7	15	59.0	65.0	7	15	42.0	44.0	7	7	6	6	67.8	189	201	7	6.5	52.0	60.0	5	12	6	7	0
32 FT	23	26	19	12	7	7.5	7	7.5	77.5	47.0	47.0	7	15	58.0	65.0	7	15	41.0	44.0	7	7	6	6	67.8	190	202	7	6.5	52.0	60.0	5	12	6	6.5	0
34 FT	24	27	19	12	7	7.5	7	7	77.6	48.0	48.0	7	14	58.0	65.0	7	14	41.0	43.0	7	7	6	6	67.9	191	203	7	6	52.0	60.0	5	12	6	6.5	0
36 FT	25	28	20	12	7	7	7	7.5	78.1	49.0	49.0	7	14	58.0	64.0	7	14	40.0	42.0	7	7	6	6	68.1	192	204	7	6	52.0	60.0	5	12	6	6.5	0
38 FT	26	29	21	12	7	7	7	7.5	78.6	50.0	50.0	7	13	58.0	64.0	7	13	40.0	41.0	7	6.5	6	6	68.3	193	205	7	6	52.0	61.0	5	12	6	6	0
40 FT	27	30	21	12	7	6.5	7	7.5	77.1	51.0	51.0	7	13	57.0	63.0	7	13	39.0	40.0	7	6.5	6	6	66.5	194	206	7	6	52.0	61.0	5	12	6	6	0
42 FT	27	31	21	12	7	6	7	7	77.0	51.0	51.0	7	12	57.0	63.0	7	12	40.0	41.0	7	6.5	6	6	66.8	195	207	7	6	52.0	61.0	5	12	6	6	0
44 FT	28	31	22	12	7	6.5	7	7	77.6	52.0	58.0	7	12	57.0	63.0	7	12	39.0	40.0	7	6	7	7.5	69.6	195	207	8	7.5	58.0	67.0	5	12	6	6	0
46 FT	29	32	22	12	7	6	7	6.5	77.9	59.0	59.0	7	12	57.0	62.0	7	12	38.0	40.0	7	6	7	7.5	70.0	196	208	8	7.5	58.0	67.0	5	12	6	6	0
48 FT	30	33	23	12	7	6	7	6.5	78.6	54.0	60.0	7	12	57.0	62.0	7	12	38.0	39.0	7	6	7	7.5	70.4	197	209	8	7	58.0	67.0	5	12	7	8	0
50 FT	30	34	24	12	7	6	7	6.5	79.1	54.0	60.0	7	12	57.0	62.0	7	12	38.0	39.0	7	6	7	7	70.6	198	210	8	7	58.0	67.0	5	12	7	8	0

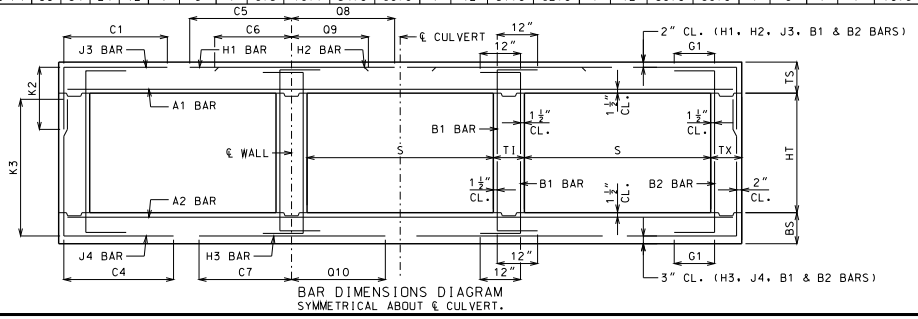

BAR DIMENSIONS DIAGRAM
SYMMETRICAL ABOUT ℄ CULVERT.

GENERAL NOTES:

IF DESIGN FILL IS BETWEEN TABULATED DESIGN FILLS, USE THE NEXT GREATER TABULATED DESIGN FILL, EXCEPT FOR DESIGN FILLS BETWEEN 2 FEET AND 4 FEET. FOR DESIGN FILLS BETWEEN 2 FEET AND 4 FEET USE THE GREATER MEMBER THICKNESS, AREA OF REINFORCEMENT AND BAR DIMENSIONS FROM THE 2 FEET AND 4 FEET TABULATED DESIGN FILLS. AREA OF REINFORCEMENT EQUALS BAR AREA PER FOOT SPACING.

SPECIAL DESIGNS ARE REQUIRED WHEN THE DESIGN FILL IS LESS THAN 1 FOOT OR GREATER THAN 50 FEET.

DIMENSIONS ARE IN INCHES UNLESS OTHERWISE SPECIFIED.

DESIGN FILLS ARE MEASURED FROM THE TOP OF TOP SLAB TO THE TOP OF EARTH FILL OR ROADWAY.

CULVERTS MEET STRENGTH AND SERVICEABILITY REQUIREMENTS FOR THE DESIGN VEHICULAR LIVE LOAD HL-93 MINUS THE LANE LOAD.

MISSOURI HIGHWAYS AND TRANSPORTATION COMMISSION
105 WEST CAPITOL
JEFFERSON CITY, MO 65102
1-888-ASK-MODOT (1-888-275-6636)

STATE OF MISSOURI
DENNIS W. HECKMAN
NUMBER PE-27141
PROFESSIONAL ENGINEER
THIS SHEET HAS BEEN SIGNED, SEALED AND DATED ELECTRONICALLY.

CONCRETE TRIPLE BOX CULVERT

MEMBER THICKNESS
BAR SIZE, SPACING & DIMENSIONS

SPAN (S): 12 FEET
HEIGHT (HT): 12 THRU 15 FEET

DATE EFFECTIVE: 12/01/2011
DATE PREPARED: 9/29/2011

703.87

SHEET NO.
19 OF 27

IF A SEAL IS PRESENT ON THIS SHEET IT HAS BEEN ELECTRONICALLY SEALED AND DATED.

SPAN (S) = 13 FT HEIGHT (HT) = 7 FT OR 8 FT OR 9 FT

DESIGN FILL	MEMBER THICKNESS				TOP SLAB BARS															BOTTOM SLAB BARS												WALL BARS				
					A1 BARS		J3 BARS			K2			H1 BARS				H2 BARS				A2 BARS		J4 BARS			K3			H3 BARS				B1 BARS		B2 BARS		
	TS	BS	TX	TI	SIZE	SPA.	SIZE	SPA.	C1	HT=7'	HT=8'	HT=9'	SIZE	SPA.	C5	Q8	SIZE	SPA.	C6	Q9	SIZE	SPA.	SIZE	SPA.	C4	HT=7'	HT=8'	HT=9'	SIZE	SPA.	C7	Q10	SIZE	SPA.	SIZE	SPA.	G1
1 FT	14	9	8	8	5	6	5	8.5	65.8	34.0	34.0	34.0	5	12	125.5	92.5	5	12	34.0	38.0	5	7.5	6	6	60.0	89	101	113	6	6	56.0	59.0	5	12	5	12	12
2 FT	15	10	8	8	6	8	5	8	65.8	31.0	35.0	35.0	6	16	129.5	99.5	6	16	40.0	44.0	5	7	6	6.5	55.5	90	102	114	6	6	54.0	59.0	5	12	5	12	12
4 FT	11	10	8	8	6	8	6	7	56.4	31.0	35.0	35.0	6	14	77.0	97.0	6	14	38.0	40.0	5	7	6	6	49.5	90	102	114	7	6.5	57.0	62.0	5	12	5	12	12
6 FT	11	11	8	8	6	8.5	6	7	49.0	31.0	31.0	35.0	6	13	63.0	75.0	6	13	35.0	37.0	5	6.5	6	7	45.9	91	103	115	7	7	55.0	62.0	5	12	5	12	12
8 FT	12	12	8	8	5	6	5	6	42.0	32.0	32.0	32.0	6	14	58.0	67.0	6	14	34.0	36.0	5	6	6	7	43.3	92	104	116	7	7	54.0	62.0	5	12	5	12	0
10 FT	13	14	8	8	5	6	5	6	39.8	33.0	33.0	33.0	6	13	55.0	63.0	6	13	33.0	36.0	6	8	5	6.5	38.1	94	106	118	6	6	50.0	59.0	5	12	5	12	0
12 FT	14	15	8	8	6	8	5	6	37.9	34.0	34.0	34.0	6	13	53.0	62.0	6	13	33.0	35.0	6	7.5	5	6.5	36.9	95	107	119	6	6	49.0	59.0	5	12	5	12	0
14 FT	15	16	8	8	6	7.5	5	6	41.4	35.0	35.0	35.0	6	12	58.0	67.0	6	12	39.0	41.0	6	7	5	6.5	35.9	96	108	120	6	6	49.0	59.0	5	12	5	10.5	0
16 FT	16	17	8	8	6	7.5	6	8	44.4	36.0	36.0	36.0	6	12	57.0	67.0	6	12	38.0	41.0	6	7	5	6.5	35.1	97	109	121	6	6	49.0	60.0	5	12	5	9.5	0
18 FT	17	18	8	8	6	7	6	7.5	43.5	37.0	37.0	37.0	6	12	56.0	66.0	6	12	38.0	41.0	6	6.5	5	6	34.5	98	110	122	7	7	52.0	63.0	5	12	5	9.5	0
20 FT	18	20	9	8	6	6.5	6	8	44.3	38.0	38.0	38.0	7	15	61.0	71.0	7	15	43.0	46.0	6	6	5	7	34.6	100	112	124	6	6	49.0	60.0	5	12	5	9	0
22 FT	20	21	9	8	6	6.5	6	8	43.4	40.0	40.0	40.0	6	12	55.0	66.0	6	12	38.0	41.0	7	8	5	6.5	34.5	101	113	125	7	7	52.0	63.0	5	12	5	8.5	0
24 FT	21	22	9	8	6	6	6	7.5	43.0	41.0	41.0	41.0	7	15	60.0	71.0	7	15	43.0	46.0	7	7.5	5	6	34.3	102	114	126	7	7	51.0	63.0	5	12	5	8.5	0
26 FT	22	24	10	8	6	6	6	8	43.8	42.0	42.0	42.0	7	15	59.0	70.0	7	15	42.0	46.0	7	7	5	6.5	34.5	104	116	128	7	7	51.0	63.0	5	12	5	8	0
28 FT	23	25	11	8	7	7	5	6	40.5	43.0	43.0	43.0	7	14	59.0	70.0	7	14	42.0	46.0	7	6.5	5	7	34.9	105	117	129	7	6.5	51.0	63.0	5	12	5	8.5	0
30 FT	25	26	11	8	7	7	5	6	40.0	45.0	45.0	45.0	7	14	59.0	70.0	7	14	41.0	44.0	7	6.5	5	6.5	34.9	106	118	130	7	6.5	51.0	63.0	5	12	5	7.5	0
32 FT	26	27	11	8	7	7	5	6	39.8	46.0	46.0	46.0	7	13	59.0	69.0	7	13	40.0	43.0	7	6	5	6	34.8	107	119	131	7	6	51.0	63.0	5	12	5	7.5	0
34 FT	27	29	11	8	7	6.5	6	8	43.9	47.0	47.0	51.0	7	13	58.0	69.0	7	13	40.0	42.0	7	6.5	6	7.5	37.9	109	121	133	8	7.5	57.0	69.0	5	12	5	7.5	0
36 FT	28	30	11	8	7	6.5	6	7.5	43.9	52.0	52.0	52.0	7	12	58.0	68.0	7	12	40.0	42.0	7	6	6	7	37.9	110	122	134	8	7.5	57.0	69.0	5	12	5	7.5	0
38 FT	29	31	11	8	7	6	6	6.5	43.9	53.0	53.0	53.0	7	12	58.0	68.0	7	12	39.0	41.0	7	6	6	7	38.0	111	123	135	8	7	57.0	69.0	5	12	5	7	0
40 FT	30	32	12	8	7	6	6	7.5	44.8	54.0	54.0	54.0	7	12	58.0	68.0	7	12	38.0	40.0	7	6	6	7.5	38.5	112	124	136	8	7	57.0	70.0	5	12	5	7	0
42 FT	31	33	12	8	8	7.5	6	7.5	43.8	55.0	55.0	55.0	8	15	66.0	75.0	8	15	46.0	47.0	7	6	6	7	37.6	113	125	137	8	7	57.0	69.0	5	12	5	7	0
44 FT	32	34	12	8	8	7.5	6	7	43.9	56.0	56.0	56.0	8	14	65.0	74.0	8	14	45.0	47.0	7	6	6	7	37.8	114	126	138	8	7	57.0	69.0	5	12	5	7	0
46 FT	32	35	12	8	8	7	6	7	43.9	56.0	56.0	56.0	8	14	65.0	74.0	8	14	46.0	47.0	7	6	6	6.5	37.8	115	127	139	8	7	57.0	69.0	5	12	5	7	0
48 FT	33	35	12	8	8	7	6	7	43.9	57.0	57.0	57.0	8	14	65.0	74.0	8	14	45.0	47.0	8	7	6	6.5	37.9	115	127	139	8	6.5	57.0	69.0	5	12	5	6.5	0
50 FT	34	36	12	8	8	7	6	6.5	43.9	58.0	58.0	58.0	8	14	65.0	73.0	8	14	45.0	46.0	8	7	6	6.5	38.1	116	128	140	8	6.5	57.0	69.0	5	12	5	6	0

SPAN (S) = 13 FT HEIGHT (HT) = 10 FT OR 11 FT OR 12 FT

DESIGN FILL	MEMBER THICKNESS				TOP SLAB BARS															BOTTOM SLAB BARS												WALL BARS				
					A1 BARS		J3 BARS			K2			H1 BARS				H2 BARS				A2 BARS		J4 BARS			K3			H3 BARS				B1 BARS		B2 BARS		
	TS	BS	TX	TI	SIZE	SPA.	SIZE	SPA.	C1	HT=10'	HT=11'	HT=12'	SIZE	SPA.	C5	Q8	SIZE	SPA.	C6	Q9	SIZE	SPA.	SIZE	SPA.	C4	HT=10'	HT=11'	HT=12'	SIZE	SPA.	C7	Q10	SIZE	SPA.	SIZE	SPA.	G1
1 FT	14	10	9	10	5	6	5	7	66.6	34.0	34.0	34.0	5	12	126.5	93.5	5	12	35.0	38.0	5	7	6	6	81.5	126	138	150	6	6.5	57.0	60.0	5	12	5	9	12
2 FT	15	10	10	10	6	8	5	7.5	67.3	35.0	35.0	35.0	6	16	130.5	100.5	6	16	41.0	44.0	5	7	6	6	70.1	126	138	150	6	6	56.0	58.0	5	12	5	9.5	12
4 FT	11	10	10	10	6	8	5	6	72.3	31.0	31.0	31.0	6	15	82.0	97.0	6	15	38.0	39.0	5	7	6	6	64.6	126	138	150	7	6.5	58.0	61.0	5	9.5	5	9	12
6 FT	11	11	10	10	5	6	5	6	60.5	31.0	31.0	31.0	6	14	64.0	71.0	6	14	36.0	37.0	5	6.5	6	6	61.0	127	139	151	7	6.5	57.0	61.0	5	12	5	9	12
8 FT	12	13	10	10	5	6	5	6	56.8	32.0	32.0	32.0	6	14	60.0	64.0	6	14	35.0	36.0	5	6	6	6.5	59.1	129	141	153	6	6	52.0	59.0	5	12	5	8.5	0
10 FT	13	14	10	10	5	6	6	7	56.9	33.0	33.0	37.0	6	13	57.0	62.0	6	13	34.0	36.0	6	8	6	6.5	56.8	130	142	154	6	6	51.0	59.0	5	12	5	8	0
12 FT	14	15	10	10	5	6	6	6.5	54.6	34.0	34.0	38.0	6	13	55.0	61.0	6	13	34.0	36.0	6	7.5	6	6.5	54.9	131	143	155	6	6	51.0	59.0	5	12	5	8	0
14 FT	15	16	10	10	6	8	6	6.5	58.9	35.0	35.0	39.0	6	13	60.0	66.0	6	13	39.0	42.0	6	7	6	6	53.5	132	144	156	6	6	50.0	59.0	5	12	5	8	0
16 FT	16	17	11	10	6	7.5	6	7	58.0	36.0	36.0	40.0	6	12	58.0	66.0	6	12	39.0	42.0	6	7	6	7.5	52.5	133	145	157	6	6	50.0	59.0	5	12	5	7.5	0
18 FT	17	18	12	10	6	7.5	6	7	57.9	37.0	37.0	41.0	6	12	58.0	66.0	6	12	39.0	42.0	6	6	6	7.5	52.0	134	146	158	7	7	53.0	62.0	5	12	5	7	0
20 FT	18	20	12	10	6	7	6	6.5	57.3	38.0	38.0	42.0	6	12	57.0	65.0	6	12	39.0	42.0	6	6	6	7.5	51.5	136	148	160	6	6	50.0	60.0	5	12	5	7	0
22 FT	19	21	12	10	6	6	6	6.5	56.8	39.0	39.0	43.0	7	15	62.0	70.0	7	15	44.0	47.0	7	8	6	7	51.0	137	149	161	7	7	53.0	63.0	5	12	5	7	0
24 FT	21	22	13	10	6	6	6	6.5	56.9	41.0	41.0	45.0	6	12	56.0	65.0	6	12	38.0	42.0	7	7	6	7.5	51.1	138	150	162	7	7	53.0	63.0	5	12	5	6.5	0
26 FT	22	24	13	10	6	6	6	6.5	56.6	42.0	42.0	46.0	7	15	60.0	70.0	7	15	43.0	46.0	7	7	6	7.5	50.9	140	152	164	7	7	53.0	63.0	5	12	5	6.5	0
28 FT	23	25	14	10	7	7.5	6	6.5	57.0	43.0	43.0	47.0	7	15	60.0	69.0	7	15	43.0	46.0	7	6.5	6	8	51.0	141	153	165	7	6.5	53.0	63.0	5	12	5	6	0
30 FT	24	26	14	10	7	7	6	6.5	56.6	44.0	44.0	48.0	7	14	60.0	69.0	7	14	42.0	45.0	7	6.5	6	7.5	50.8	142	154	166	7	6.5	53.0	63.0	5	12	5	6	0
32 FT	26	28	14	10	7	7	6	6	56.5	46.0	46.0	50.0	7	13	59.0	69.0	7	13	41.0	43.0	7	6.5	6	7.5	50.8	144	156	168	7	6	53.0	63.0	5	12	5	6	0
34 FT	27	29	15	10	7	6.5	6	6.5	57.1	51.0	51.0	51.0	7	13	59.0	68.0	7	13	40.0	43.0	7	6.5	6	8	51.1	145	157	169	8	7.5	59.0	70.0	5	12	6	8	0
36 FT	28	30	15	10	7	6.5	6	6	57.1	52.0	52.0	52.0	7	12	59.0	68.0	7	12	40.0	42.0	7	6	6	7.5	51.1	146	158	170	8	7.5	59.0	70.0	5	12	6	8	0
38 FT	29	31	16	10	7	6	6	6	57.8	53.0	53.0	53.0	7	12	59.0	68.0	7	12	39.0	41.0	7	6	6	7.5	51.6	147	159	171	8	7	59.0	70.0	5	12	6	8	0
40 FT	30	32	16	10	7	6	6	6	57.8	54.0	54.0	54.0	7	12	59.0	67.0	7	12	39.0	40.0	7	6	6	7.5	51.6	148	160	172	8	7	59.0	70.0	5	12	6	8	0
42 FT	30	33	17	10	7	6	6	6	58.5	54.0	54.0	54.0	7	12	59.0	67.0	7	12	40.0	41.0	7	6	6	7	51.9	149	161	173	8	7	59.0	70.0	5	12	6	7.5	0
44 FT	31	34	17	10	8	7.5	6	6	57.4	55.0	55.0	55.0	8	15	66.0	74.0	8	15	47.0	48.0	7	6	6	7	50.8	150	162	174	8	7	59.0	70.0	5	12	6	7.5	0
46 FT	32	35	17	10	8	7.5	6	6	57.4	56.0	56.0	56.0	8	14	66.0	74.0	8	14	46.0	48.0	8	7.5	6	6.5	50.9	151	163	175	8	7	59.0	70.0	5	12	6	7.5	0
48 FT	33	36	17	10	8	7	6	6	57.4	57.0	57.0	57.0	8	14	66.0	73.0	8	14	46.0	47.0	8	7.5	6	6.5	51.1	152	164	176	8	6.5	59.0	70.0	5	12	6	7.5	0
50 FT	34	36	18	10	8	7	6	6	58.1	58.0	58.0	58.0	8	14	66.0	73.0	8	14	46.0	47.0	8	6.5	6	6.5	51.5	152	164	176	8	6.5	59.0	70.0	5	12	6	7	0

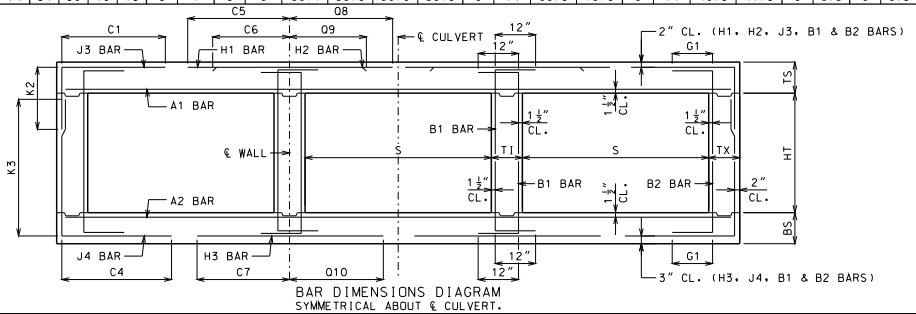

BAR DIMENSIONS DIAGRAM
SYMMETRICAL ABOUT ℄ CULVERT.

GENERAL NOTES:

IF DESIGN FILL IS BETWEEN TABULATED DESIGN FILLS, USE THE NEXT GREATER TABULATED DESIGN FILL, EXCEPT FOR DESIGN FILLS BETWEEN 2 FEET AND 4 FEET. FOR DESIGN FILLS BETWEEN 2 FEET AND 4 FEET USE THE GREATER MEMBER THICKNESS, AREA OF REINFORCEMENT AND BAR DIMENSIONS FROM THE 2 FEET AND 4 FEET TABULATED DESIGN FILLS. AREA OF REINFORCEMENT EQUALS BAR AREA PER FOOT SPACING.

SPECIAL DESIGNS ARE REQUIRED WHEN THE DESIGN FILL IS LESS THAN 1 FOOT OR GREATER THAN 50 FEET.

DIMENSIONS ARE IN INCHES UNLESS OTHERWISE SPECIFIED.

DESIGN FILLS ARE MEASURED FROM THE TOP OF TOP SLAB TO THE TOP OF EARTH FILL OR ROADWAY.

CULVERTS MEET STRENGTH AND SERVICEABILITY REQUIREMENTS FOR THE DESIGN VEHICULAR LIVE LOAD HL-93 MINUS THE LANE LOAD.

MISSOURI HIGHWAYS AND TRANSPORTATION COMMISSION
105 WEST CAPITOL
JEFFERSON CITY, MO 65102
1-888-ASK-MODOT (1-888-275-6636)

STATE OF MISSOURI
DENNIS W. HECKMAN
NUMBER PE-27141
PROFESSIONAL ENGINEER
THIS SHEET HAS BEEN SIGNED, SEALED AND DATED ELECTRONICALLY.

CONCRETE TRIPLE BOX CULVERT

MEMBER THICKNESS
BAR SIZE, SPACING & DIMENSIONS

SPAN (S): 13 FEET
HEIGHT (HT): 7 THRU 12 FEET

DATE EFFECTIVE: 12/01/2011
DATE PREPARED: 9/29/2011

703.87

SHEET NO.
20 OF 27

IF A SEAL IS PRESENT ON THIS SHEET IT HAS BEEN ELECTRONICALLY SEALED AND DATED.

SPAN (S) = 13 FT HEIGHT (HT) = 13 FT OR 14 FT

DESIGN FILL	MEMBER THICKNESS				TOP SLAB BARS														BOTTOM SLAB BARS										WALL BARS				
					A1 BARS		J3 BARS					H1 BARS				H2 BARS				A2 BARS		J4 BARS				H3 BARS				B1 BARS		B2 BARS	
	TS	BS	TX	TI	SIZE	SPA.	SIZE	SPA.	C1	K2 HT=13'	K2 HT=14'	SIZE	SPA.	C5	Q8	SIZE	SPA.	C6	Q9	SIZE	SPA.	SIZE	SPA.	C4	K3 HT=13'	K3 HT=14'	SIZE	SPA.	C7	Q10	SIZE	SPA.	SIZE	SPA.	G1
1 FT	14	11	10	11	5	6	5	6	67.5	34.0	34.0	5	12	127.5	94.5	5	12	35.0	38.0	5	7	6	6.5	100.1	163	175	5	6	56.0	58.0	5	12	5	8	12
2 FT	15	11	10	11	6	8	5	6	67.5	35.0	35.0	6	16	131.5	101.5	6	16	41.0	44.0	5	6.5	6	6	88.9	163	175	6	6.5	57.0	60.0	5	12	5	8	12
4 FT	11	11	11	11	6	8	5	6	68.1	31.0	31.0	6	15	127.5	92.0	6	15	38.0	39.0	5	6.5	6	6	78.6	163	175	6	6	56.0	60.0	5	12	5	7.5	12
6 FT	11	12	11	11	5	6	6	7.5	75.9	31.0	35.0	6	14	65.0	69.0	6	14	36.0	37.0	5	6	6	6.5	74.6	164	176	6	6	54.0	59.0	5	12	5	7.5	12
8 FT	12	13	11	11	5	6	6	7.5	70.1	32.0	36.0	6	14	61.0	64.0	6	14	35.0	36.0	5	6	6	6.5	70.9	165	177	6	6	53.0	59.0	5	12	5	7.5	0
10 FT	12	14	12	11	5	6	6	7.5	65.9	36.0	36.0	6	12	58.0	61.0	6	12	35.0	35.0	6	8	6	7	67.9	166	178	6	6	52.0	59.0	5	12	5	7	0
12 FT	13	15	12	11	6	8	6	7	64.4	37.0	37.0	6	12	56.0	60.0	6	12	34.0	35.0	6	7.5	6	7	66.3	167	179	6	6	52.0	59.0	5	12	5	7	0
14 FT	15	16	12	11	6	8	6	6.5	69.9	39.0	39.0	6	13	60.0	66.0	6	13	40.0	42.0	6	7	6	6	64.9	168	180	6	6	51.0	59.0	5	12	5	7	0
16 FT	16	17	13	11	6	8	6	6.5	68.9	40.0	40.0	6	13	59.0	65.0	6	13	40.0	42.0	6	7	6	6.5	63.8	169	181	6	6	51.0	59.0	5	12	5	6.5	0
18 FT	17	19	14	11	6	7.5	6	6.5	68.3	41.0	41.0	6	12	58.0	65.0	6	12	40.0	42.0	6	6	6	6.5	63.5	171	183	6	6	51.0	60.0	5	12	5	6	0
20 FT	18	20	14	11	6	7	6	6	67.5	42.0	42.0	6	12	58.0	65.0	6	12	39.0	42.0	6	6	6	6.5	62.8	172	184	6	6	51.0	60.0	5	12	5	6	0
22 FT	19	21	14	11	6	6.5	6	6	66.9	43.0	43.0	6	12	57.0	65.0	6	12	39.0	42.0	7	8	6	6	62.1	173	185	7	7	54.0	63.0	5	12	5	6	0
24 FT	20	22	16	11	6	6	6	6	67.3	44.0	44.0	7	15	62.0	69.0	7	15	44.0	47.0	7	7	6	6.5	61.8	174	186	7	7	54.0	63.0	5	12	6	8	0
26 FT	22	24	16	11	6	6	6	6	67.1	46.0	46.0	7	15	61.0	69.0	7	15	43.0	46.0	7	7	6	7	61.8	176	188	7	7	54.0	63.0	5	12	6	8	0
28 FT	23	25	16	11	7	7.5	7	8	71.6	47.0	47.0	7	15	61.0	69.0	7	15	43.0	46.0	7	6.5	6	6.5	61.4	177	189	7	6.5	54.0	63.0	5	12	6	8	0
30 FT	24	26	16	11	7	7.5	7	7	71.3	48.0	48.0	7	14	60.0	69.0	7	14	42.0	45.0	7	6.5	6	6	61.0	178	190	7	6.5	54.0	63.0	5	12	6	8	0
32 FT	25	28	17	11	7	7	7	7.5	71.6	49.0	49.0	7	14	60.0	68.0	7	14	42.0	45.0	7	6.5	6	6.5	61.1	180	192	7	6	54.0	64.0	5	12	6	7.5	0
34 FT	26	29	17	11	7	6.5	7	6.5	71.4	50.0	50.0	7	13	60.0	68.0	7	13	42.0	44.0	7	6.5	6	6.5	61.0	181	193	8	7.5	60.0	70.0	5	12	6	7.5	0
36 FT	27	30	18	11	7	6.5	7	7	72.0	51.0	51.0	7	13	60.0	68.0	7	13	41.0	43.0	7	6	6	6.5	61.3	182	194	8	7.5	60.0	70.0	5	12	6	7	0
38 FT	28	31	19	11	7	6.5	7	7.5	72.5	52.0	52.0	7	12	59.0	67.0	7	12	41.0	43.0	7	6	6	6.5	61.5	183	195	8	7	60.0	70.0	5	12	6	6.5	0
40 FT	29	32	19	11	7	6	7	6.5	72.6	53.0	53.0	7	12	59.0	67.0	7	12	40.0	42.0	7	6	6	6	61.5	184	196	8	7	60.0	70.0	5	12	6	6.5	0
42 FT	30	33	20	11	7	6	7	7	73.3	54.0	54.0	7	12	59.0	66.0	7	12	39.0	41.0	7	6	6	6	61.9	185	197	8	7	60.0	70.0	5	12	6	6.5	0
44 FT	31	34	20	11	8	7.5	7	7	71.6	55.0	55.0	8	15	67.0	73.0	8	15	47.0	48.0	7	6	6	6	60.1	186	198	8	7	60.0	70.0	5	12	6	6.5	0
46 FT	32	35	20	11	8	7.5	7	6.5	71.6	56.0	56.0	8	15	67.0	73.0	8	15	46.0	48.0	8	7.5	6	6	60.3	187	199	8	7	60.0	70.0	5	12	6	6.5	0
48 FT	32	36	21	11	8	7	7	7	72.4	56.0	56.0	8	14	67.0	73.0	8	14	47.0	48.0	8	7.5	6	6	60.5	188	200	8	6.5	60.0	70.0	5	12	6	6	0
50 FT	33	36	22	11	8	7	7	7	73.1	57.0	63.0	8	14	66.0	72.0	8	14	46.0	47.0	8	6.5	7	7.5	63.8	188	200	8	6.5	60.0	70.0	5	12	6	6	0

SPAN (S) = 13 FT HEIGHT (HT) = 15 FT OR 16 FT

DESIGN FILL	MEMBER THICKNESS				TOP SLAB BARS														BOTTOM SLAB BARS										WALL BARS				
					A1 BARS		J3 BARS					H1 BARS				H2 BARS				A2 BARS		J4 BARS				H3 BARS				B1 BARS		B2 BARS	
	TS	BS	TX	TI	SIZE	SPA.	SIZE	SPA.	C1	K2 HT=15'	K2 HT=16'	SIZE	SPA.	C5	Q8	SIZE	SPA.	C6	Q9	SIZE	SPA.	SIZE	SPA.	C4	K3 HT=15'	K3 HT=16'	SIZE	SPA.	C7	Q10	SIZE	SPA.	SIZE	SPA.	G1
1 FT	14	11	12	13	5	6	5	6	69.0	34.0	34.0	5	12	128.5	95.5	5	12	35.0	37.0	5	6.5	6	6.5	103.3	187	199	6	7	60.0	61.0	5	10.5	5	7	12
2 FT	15	11	12	13	6	8	6	8	72.0	35.0	39.0	6	16	135.5	102.5	6	16	41.0	44.0	5	6.5	6	6	95.4	187	199	6	6.5	58.0	59.0	5	12	5	7	12
4 FT	11	11	12	13	6	8	6	7	72.0	35.0	35.0	6	15	130.5	82.0	6	15	39.0	39.0	5	6.5	7	6	92.5	187	199	6	6	57.0	59.0	5	12	5	6.5	12
6 FT	11	12	12	13	5	6	6	6.5	90.4	35.0	35.0	6	14	65.0	66.0	6	14	37.0	37.0	5	6	7	6	88.9	188	200	6	6	56.0	59.0	5	12	5	6.5	12
8 FT	11	13	13	13	5	6	6	6.5	78.1	35.0	35.0	6	13	60.0	62.0	6	13	36.0	36.0	5	6	6	6	82.4	189	201	6	6	55.0	59.0	5	12	5	6.5	0
10 FT	12	14	13	13	5	6	6	6.5	76.0	36.0	36.0	6	13	58.0	60.0	6	13	35.0	36.0	6	8	6	6	80.4	190	202	6	6	54.0	59.0	5	12	5	6	0
12 FT	13	15	14	13	5	6	6	6.5	73.3	37.0	37.0	6	12	57.0	59.0	6	12	35.0	36.0	6	7.5	6	6	77.5	191	203	6	6	53.0	59.0	5	12	5	6	0
14 FT	14	16	14	13	6	8	6	6	72.3	38.0	38.0	6	12	55.0	59.0	6	12	35.0	36.0	6	7	6	6	76.3	192	204	7	7	55.0	62.0	5	12	5	6	0
16 FT	15	17	16	13	6	7.5	6	6.5	76.6	39.0	39.0	6	12	60.0	64.0	6	12	41.0	42.0	6	6.5	6	6.5	73.3	193	205	7	7	55.0	62.0	5	12	6	8	0
18 FT	16	19	16	13	6	7	6	6	76.3	40.0	40.0	6	12	59.0	64.0	6	12	40.0	42.0	6	6	6	6	74.1	195	207	6	6	52.0	60.0	5	12	6	8	0
20 FT	18	20	16	13	6	7	6	6	76.8	42.0	42.0	6	12	59.0	64.0	6	12	40.0	42.0	6	6	6	6	73.0	196	208	6	6	52.0	60.0	5	12	6	8	0
22 FT	19	21	17	13	6	6.5	6	6	76.4	43.0	43.0	6	12	58.0	64.0	6	12	40.0	42.0	7	7.5	7	7.5	75.1	197	209	7	7	55.0	63.0	5	12	6	7.5	0
24 FT	20	23	17	13	6	6.5	7	7.5	81.1	44.0	50.0	6	12	58.0	64.0	6	12	40.0	42.0	7	7	7	7	75.4	199	211	7	7	55.0	63.0	5	12	6	7.5	0
26 FT	22	24	18	13	6	6	7	7.5	81.5	46.0	52.0	7	15	62.0	69.0	7	15	44.0	46.0	7	7	7	7.5	74.9	200	212	7	7	55.0	63.0	5	12	6	7	0
28 FT	23	25	18	13	7	7.5	7	6.5	81.3	47.0	53.0	7	15	62.0	69.0	7	15	43.0	46.0	7	6.5	7	6.5	74.6	201	213	7	6.5	55.0	63.0	5	12	6	7	0
30 FT	24	26	19	13	7	7.5	7	7	81.3	48.0	54.0	7	14	61.0	69.0	7	14	43.0	46.0	7	6.5	7	7	74.4	202	214	7	6.5	55.0	63.0	5	12	6	6.5	0
32 FT	25	28	20	13	7	7	7	7	81.4	49.0	55.0	7	14	61.0	68.0	7	14	42.0	45.0	7	6.5	7	7.5	74.6	204	216	7	6	55.0	64.0	5	12	6	6.5	0
34 FT	26	29	21	13	7	7	7	7	81.6	50.0	56.0	7	13	61.0	68.0	7	13	42.0	44.0	7	6.5	7	7.5	74.5	205	217	8	7.5	61.0	70.0	5	12	6	6	0
36 FT	27	30	22	13	7	6.5	7	7	82.0	57.0	57.0	7	13	60.0	68.0	7	13	42.0	44.0	7	6	7	7.5	74.8	206	218	8	7.5	61.0	70.0	5	12	6	6	0
38 FT	28	31	22	13	7	6.5	7	6.5	82.1	58.0	58.0	7	12	60.0	67.0	7	12	41.0	43.0	7	6	7	7	74.8	207	219	8	7	61.0	70.0	5	12	6	6	0
40 FT	29	32	23	13	7	6	7	6.5	82.6	59.0	59.0	7	12	60.0	67.0	7	12	41.0	42.0	7	6	7	7	75.0	208	220	8	7	61.0	70.0	5	12	7	7.5	0
42 FT	30	33	24	13	7	6	7	6.5	83.3	60.0	60.0	7	12	60.0	66.0	7	12	40.0	42.0	7	6	7	7	75.3	209	221	8	7	61.0	70.0	5	12	7	7.5	0
44 FT	31	34	24	13	7	6	7	7	81.8	61.0	61.0	8	15	68.0	74.0	8	15	47.0	49.0	7	6	7	7	73.5	210	222	8	7	61.0	70.0	5	12	7	7.5	0
46 FT	31	35	24	13	8	7.5	7	6	81.6	61.0	61.0	8	15	68.0	74.0	8	15	48.0	49.0	8	7.5	7	7	73.8	211	223	8	7	61.0	70.0	5	12	7	7.5	0
48 FT	32	36	25	13	8	7.5	7	6	82.4	62.0	62.0	8	14	67.0	73.0	8	14	47.0	49.0	8	7.5	7	7	74.1	212	224	8	6.5	61.0	71.0	5	12	7	7.5	0
50 FT	33	37	26	13	8	7	7	6	83.1	63.0	63.0	8	14	67.0	72.0	8	14	47.0	48.0	8	7.5	7	6.5	74.5	213	225	8	6.5	61.0	71.0	5	12	7	7.5	0

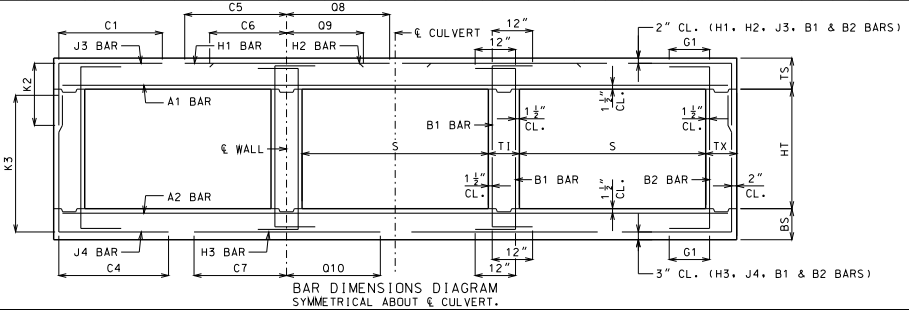

BAR DIMENSIONS DIAGRAM
SYMMETRICAL ABOUT ℄ CULVERT.

GENERAL NOTES:

IF DESIGN FILL IS BETWEEN TABULATED DESIGN FILLS, USE THE NEXT GREATER TABULATED DESIGN FILL, EXCEPT FOR DESIGN FILLS BETWEEN 2 FEET AND 4 FEET. FOR DESIGN FILLS BETWEEN 2 FEET AND 4 FEET USE THE GREATER MEMBER THICKNESS, AREA OF REINFORCEMENT AND BAR DIMENSIONS FROM THE 2 FEET AND 4 FEET TABULATED DESIGN FILLS. AREA OF REINFORCEMENT EQUALS BAR AREA PER FOOT SPACING.

SPECIAL DESIGNS ARE REQUIRED WHEN THE DESIGN FILL IS LESS THAN 1 FOOT OR GREATER THAN 50 FEET.

DIMENSIONS ARE IN INCHES UNLESS OTHERWISE SPECIFIED.

DESIGN FILLS ARE MEASURED FROM THE TOP OF TOP SLAB TO THE TOP OF EARTH FILL OR ROADWAY.

CULVERTS MEET STRENGTH AND SERVICEABILITY REQUIREMENTS FOR THE DESIGN VEHICULAR LIVE LOAD HL-93 MINUS THE LANE LOAD.

MISSOURI HIGHWAYS AND TRANSPORTATION COMMISSION
105 WEST CAPITOL
JEFFERSON CITY, MO 65102
1-888-ASK-MODOT (1-888-275-6636)

STATE OF MISSOURI
DENNIS W. HECKMAN
NUMBER PE-27141
PROFESSIONAL ENGINEER
THIS SHEET HAS BEEN SIGNED, SEALED AND DATED ELECTRONICALLY.

CONCRETE TRIPLE BOX CULVERT

MEMBER THICKNESS
BAR SIZE, SPACING & DIMENSIONS

SPAN (S): 13 FEET
HEIGHT (HT): 13 THRU 16 FEET

DATE EFFECTIVE: 12/01/2011
DATE PREPARED: 9/29/2011

703.87

SHEET NO.
21 OF 27

IF A SEAL IS PRESENT ON THIS SHEET IT HAS BEEN ELECTRONICALLY SEALED AND DATED.

SPAN (S) = 14 FT HEIGHT (HT) = 7 FT OR 8 FT OR 9 FT

DESIGN FILL	MEMBER THICKNESS				TOP SLAB BARS														BOTTOM SLAB BARS												WALL BARS				
					A1 BARS		J3 BARS			K2			H1 BARS				H2 BARS				A2 BARS		J4 BARS			K3			H3 BARS				B1 BARS		B2 BARS		
	TS	BS	TX	TI	SIZE	SPA.	SIZE	SPA.	C1	HT=7'	HT=8'	HT=9'	SIZE	SPA.	C5	Q8	SIZE	SPA.	C6	Q9	SIZE	SPA.	SIZE	SPA.	C4	HT=7'	HT=8'	HT=9'	SIZE	SPA.	C7	Q10	SIZE	SPA.	SIZE	SPA.	G1
1 FT	14	10	8	8	6	8.5	5	8.5	69.3	34.0	34.0	34.0	5	12	133.5	98.5	5	12	39.0	43.0	5	7	6	7	60.9	90	102	114	6	6.5	58.0	63.0	5	12	5	12	12
2 FT	15	10	8	8	6	8	5	8	69.3	35.0	35.0	35.0	6	16	137.5	105.5	6	16	45.0	49.0	5	7	6	6	54.8	90	102	114	7	7	60.0	64.0	5	12	5	12	12
4 FT	12	11	8	8	6	7.5	5	6	52.4	32.0	32.0	32.0	6	14	80.0	103.0	6	14	39.0	42.0	5	6.5	6	7	49.1	91	103	115	6	6	56.0	62.0	5	12	5	12	12
6 FT	12	12	8	8	6	8	6	7.5	48.9	32.0	32.0	32.0	6	13	66.0	81.0	6	13	37.0	39.0	5	6	5	6	42.1	92	104	116	7	7	57.0	65.0	5	12	5	12	12
8 FT	12	13	8	8	6	7.5	6	7	45.5	32.0	32.0	32.0	6	12	61.0	69.0	6	12	35.0	37.0	6	8.5	5	6	39.1	93	105	117	7	7	56.0	66.0	5	12	5	12	0
10 FT	13	14	9	8	6	7	5	6	41.3	33.0	33.0	33.0	7	15	61.0	69.0	7	15	38.0	40.0	6	8	5	7	38.4	94	106	118	7	6.5	55.0	65.0	5	12	5	12	0
12 FT	15	16	9	8	6	7.5	5	6.5	43.5	35.0	35.0	35.0	6	12	62.0	71.0	6	12	40.0	43.0	6	7	5	8	36.8	96	108	120	6	6	52.0	63.0	5	12	5	12	0
14 FT	16	17	9	8	6	7	5	6	41.9	36.0	36.0	36.0	6	12	61.0	70.0	6	12	40.0	43.0	6	7	5	7.5	35.8	97	109	121	7	7	54.0	66.0	5	12	5	12	0
16 FT	17	18	9	8	6	7	5	6	40.8	37.0	37.0	37.0	7	15	65.0	75.0	7	15	44.0	48.0	6	6.5	5	7	34.9	98	110	122	7	7	54.0	66.0	5	12	5	12	0
18 FT	18	20	9	8	6	6.5	6	8	44.0	38.0	38.0	38.0	7	15	64.0	75.0	7	15	44.0	47.0	6	6	5	7	34.0	100	112	124	7	7	54.0	66.0	5	12	5	10	0
20 FT	20	21	9	8	6	6.5	5	6	38.9	40.0	40.0	40.0	7	15	63.0	75.0	7	15	44.0	48.0	7	8	5	6.5	33.9	101	113	125	7	7	54.0	66.0	5	12	5	9	0
22 FT	21	22	9	8	6	6	6	8	42.4	41.0	41.0	41.0	7	14	63.0	74.0	7	14	44.0	47.0	7	7	5	6	33.5	102	114	126	7	6.5	54.0	66.0	5	12	5	8.5	0
24 FT	23	24	9	8	7	7.5	6	7	42.0	47.0	47.0	47.0	7	15	62.0	74.0	7	15	44.0	47.0	7	7	6	7	36.4	104	116	128	7	7	54.0	66.0	5	12	5	8.5	0
26 FT	24	25	9	8	7	7.5	6	7	41.6	48.0	48.0	48.0	7	14	62.0	74.0	7	14	43.0	47.0	7	6.5	6	7	36.1	105	117	129	7	6.5	54.0	66.0	5	12	5	8.5	0
28 FT	25	26	9	8	7	7	6	6	41.4	49.0	49.0	49.0	7	14	61.0	73.0	7	14	43.0	47.0	7	6	6	6.5	35.9	106	118	130	7	6	54.0	66.0	5	12	5	7.5	0
30 FT	27	28	10	8	7	6.5	6	7	42.3	51.0	51.0	51.0	7	13	61.0	73.0	7	13	42.0	45.0	7	6	6	7	36.5	108	120	132	7	6	54.0	67.0	5	12	5	8	0
32 FT	28	29	10	8	7	6.5	6	6.5	42.0	52.0	52.0	52.0	7	12	61.0	73.0	7	12	41.0	44.0	7	6	6	6.5	36.4	109	121	133	8	7.5	60.0	73.0	5	12	5	7.5	0
34 FT	29	30	10	8	7	6	6	6	41.9	53.0	53.0	53.0	7	12	61.0	72.0	7	12	41.0	44.0	8	7	6	6.5	36.4	110	122	134	8	7	60.0	73.0	5	12	5	7	0
36 FT	30	32	11	8	7	6	6	7	42.9	54.0	54.0	54.0	7	12	61.0	72.0	7	12	41.0	43.0	7	6	6	6.5	36.9	112	124	136	8	7	60.0	73.0	5	12	5	7.5	0
38 FT	31	33	11	8	8	7.5	6	6.5	42.9	55.0	55.0	55.0	8	15	68.0	79.0	8	15	48.0	51.0	8	7.5	6	6.5	37.0	113	125	137	8	6.5	60.0	73.0	5	12	5	7	0
40 FT	32	34	11	8	8	7.5	6	6.5	42.9	56.0	56.0	56.0	8	14	68.0	79.0	8	14	48.0	50.0	8	7.5	6	6	37.1	114	126	138	8	6.5	60.0	73.0	5	12	5	6.5	0
42 FT	33	35	12	8	8	7	6	7	43.8	57.0	57.0	57.0	8	14	68.0	78.0	8	14	47.0	49.0	8	7	6	6.5	37.6	115	127	139	8	6.5	60.0	73.0	5	12	5	7	0
44 FT	34	36	12	8	8	7	6	6.5	43.8	58.0	58.0	58.0	8	14	68.0	78.0	8	14	47.0	48.0	8	7	6	6.5	37.8	116	128	140	8	6	60.0	73.0	5	12	5	6.5	0
46 FT	35	37	12	8	8	6.5	6	6.5	42.9	59.0	59.0	59.0	8	13	67.0	77.0	8	13	46.0	47.0	8	7	6	6.5	37.0	117	129	141	8	6	60.0	73.0	5	12	5	6.5	0
48 FT	36	38	12	8	8	6.5	6	6.5	43.0	60.0	60.0	60.0	8	13	67.0	76.0	8	13	46.0	47.0	8	7	6	6	37.1	118	130	142	8	6	60.0	73.0	5	12	5	6	0
50 FT	37	39	12	8	8	6.5	6	6	43.1	61.0	61.0	61.0	8	13	67.0	75.0	8	13	46.0	47.0	8	7	6	6	37.4	119	131	143	8	6	60.0	73.0	5	12	5	6	0

SPAN (S) = 14 FT HEIGHT (HT) = 10 FT OR 11 FT OR 12 FT

DESIGN FILL	MEMBER THICKNESS				TOP SLAB BARS														BOTTOM SLAB BARS												WALL BARS				
					A1 BARS		J3 BARS			K2			H1 BARS				H2 BARS				A2 BARS		J4 BARS			K3			H3 BARS				B1 BARS		B2 BARS		
	TS	BS	TX	TI	SIZE	SPA.	SIZE	SPA.	C1	HT=10'	HT=11'	HT=12'	SIZE	SPA.	C5	Q8	SIZE	SPA.	C6	Q9	SIZE	SPA.	SIZE	SPA.	C4	HT=10'	HT=11'	HT=12'	SIZE	SPA.	C7	Q10	SIZE	SPA.	SIZE	SPA.	G1
1 FT	14	10	9	10	6	8.5	5	7	70.3	34.0	34.0	34.0	5	12	134.5	99.5	5	12	39.0	43.0	5	7	6	6	80.1	126	138	150	6	6	60.0	63.0	5	10.5	5	9	12
2 FT	15	11	9	10	6	8	5	7	70.3	35.0	35.0	35.0	6	16	138.5	106.5	6	16	45.0	48.0	5	6.5	6	6	73.6	127	139	151	6	6.5	59.0	62.0	5	12	5	9	12
4 FT	11	11	11	10	6	7	5	6	66.6	31.0	31.0	31.0	6	13	81.0	94.0	6	13	39.0	40.0	5	6.5	5	6	61.8	127	139	151	7	7	61.0	65.0	5	9.5	5	10	12
6 FT	12	12	11	10	6	8	5	6.5	60.6	32.0	32.0	32.0	6	13	67.0	75.0	6	13	37.0	39.0	5	6	5	6	57.3	128	140	152	7	7	59.0	65.0	5	12	5	10.5	12
8 FT	12	13	11	10	6	8	5	6	56.3	32.0	32.0	32.0	6	12	62.0	67.0	6	12	36.0	37.0	5	6	6	7	57.4	129	141	153	7	6.5	57.0	65.0	5	12	5	10	0
10 FT	13	14	11	10	6	7.5	6	8	56.3	33.0	33.0	37.0	6	12	59.0	65.0	6	12	35.0	37.0	6	7.5	6	7	55.0	130	142	154	7	6.5	57.0	65.0	5	12	5	9.5	0
12 FT	14	16	12	10	6	7.5	6	8	54.9	34.0	34.0	34.0	7	15	61.0	67.0	7	15	38.0	39.0	6	7	5	6	50.9	132	144	156	7	7	56.0	66.0	5	12	5	9.5	0
14 FT	16	17	12	10	6	7.5	6	8	59.3	36.0	36.0	36.0	6	12	62.0	70.0	6	12	41.0	43.0	6	7	5	6	49.9	133	145	157	7	7	56.0	66.0	5	12	5	9	0
16 FT	17	18	12	10	6	7	6	7.5	58.1	37.0	37.0	41.0	7	16	66.0	74.0	7	16	45.0	48.0	6	6.5	6	8	52.0	134	146	158	7	7	56.0	66.0	5	12	5	8	0
18 FT	18	20	12	10	6	7	6	7	57.5	38.0	38.0	42.0	7	15	65.0	74.0	7	15	45.0	48.0	6	6	6	8	51.3	136	148	160	7	7	55.0	66.0	5	12	5	7.5	0
20 FT	19	21	12	10	6	6	6	6.5	56.6	39.0	39.0	43.0	7	14	64.0	74.0	7	14	45.0	48.0	7	8	6	7.5	50.6	137	149	161	7	7	55.0	66.0	5	12	5	7	0
22 FT	21	22	12	10	6	6	6	6.5	55.9	41.0	41.0	45.0	7	15	64.0	74.0	7	15	45.0	48.0	7	7	6	6.5	50.3	138	150	162	7	7	55.0	66.0	5	12	5	7	0
24 FT	22	24	13	10	6	6	6	6.5	56.4	42.0	42.0	46.0	7	14	63.0	73.0	7	14	44.0	48.0	7	7	6	7.5	50.4	140	152	164	7	7	55.0	67.0	5	12	5	6.5	0
26 FT	23	25	14	10	7	7	6	6.5	56.6	43.0	43.0	47.0	7	14	63.0	73.0	7	14	44.0	48.0	7	6.5	6	8	50.4	141	153	165	7	6.5	55.0	67.0	5	12	5	6.5	0
28 FT	25	27	14	10	7	7	6	6.5	56.4	45.0	45.0	49.0	7	14	62.0	73.0	7	14	43.0	47.0	7	6.5	6	8	50.3	143	155	167	7	6	55.0	67.0	5	12	5	6	0
30 FT	26	28	14	10	7	7	6	6.5	56.0	46.0	46.0	50.0	7	13	62.0	73.0	7	13	43.0	47.0	7	6	6	7.5	50.0	144	156	168	7	6	55.0	67.0	5	12	5	6	0
32 FT	27	29	14	10	7	6	6	6	55.6	51.0	51.0	51.0	7	12	62.0	72.0	7	12	43.0	46.0	7	6	6	7.5	49.8	145	157	169	8	7.5	61.0	73.0	5	12	5	6	0
34 FT	29	31	15	10	7	6	6	6.5	56.3	53.0	53.0	53.0	7	12	61.0	72.0	7	12	41.0	44.0	7	6	6	7.5	50.3	147	159	171	8	7	61.0	73.0	5	12	6	8	0
36 FT	30	32	15	10	7	6	6	6	56.1	54.0	54.0	54.0	7	12	61.0	71.0	7	12	41.0	43.0	8	7.5	6	7.5	50.3	148	160	172	8	7	61.0	73.0	5	12	6	8	0
38 FT	31	33	16	10	8	7.5	6	6	56.9	55.0	55.0	55.0	8	15	69.0	79.0	8	15	49.0	51.0	8	7.5	6	7	50.6	149	161	173	8	6.5	61.0	73.0	5	12	6	8	0
40 FT	32	34	16	10	8	7.5	6	6	56.9	56.0	56.0	56.0	8	14	69.0	78.0	8	14	48.0	50.0	8	7	6	7	50.6	150	162	174	8	6.5	61.0	73.0	5	12	6	8	0
42 FT	33	35	16	10	8	7	6	6	56.9	57.0	57.0	57.0	8	14	69.0	78.0	8	14	48.0	49.0	8	7	6	6.5	50.8	151	163	175	8	6.5	61.0	73.0	5	12	6	8	0
44 FT	34	36	17	10	8	7	6	6	57.6	58.0	58.0	58.0	8	14	68.0	77.0	8	14	47.0	49.0	8	7	6	6.5	51.3	152	164	176	8	6	61.0	73.0	5	12	6	7.5	0
46 FT	35	37	17	10	8	6.5	6	6	56.5	59.0	59.0	59.0	8	13	68.0	77.0	8	13	47.0	48.0	8	7	6	6.5	50.1	153	165	177	8	6	61.0	73.0	5	12	6	7.5	0
48 FT	35	38	17	10	8	6.5	6	6	56.5	59.0	59.0	59.0	8	13	68.0	77.0	8	13	47.0	49.0	8	7	6	6	50.1	154	166	178	8	6	61.0	73.0	5	12	6	7.5	0
50 FT	36	39	17	10	8	6.5	7	7.5	61.6	60.0	60.0	60.0	8	13	68.0	76.0	8	13	47.0	48.0	8	6.5	6	6	50.3	155	167	179	8	6	61.0	73.0	5	12	6	7.5	0

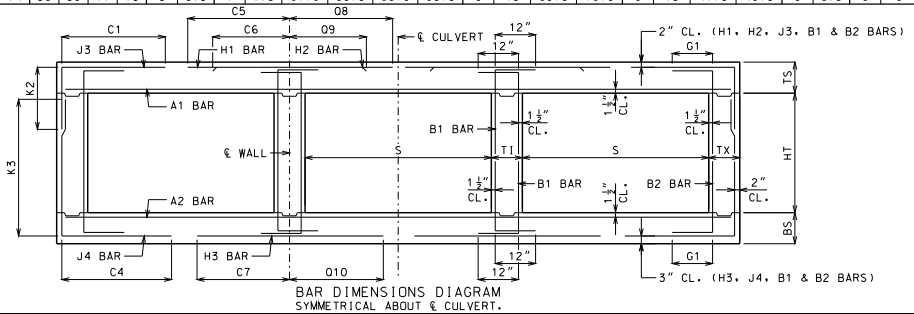

BAR DIMENSIONS DIAGRAM
SYMMETRICAL ABOUT ℄ CULVERT.

GENERAL NOTES:

IF DESIGN FILL IS BETWEEN TABULATED DESIGN FILLS, USE THE NEXT GREATER TABULATED DESIGN FILL, EXCEPT FOR DESIGN FILLS BETWEEN 2 FEET AND 4 FEET. FOR DESIGN FILLS BETWEEN 2 FEET AND 4 FEET USE THE GREATER MEMBER THICKNESS, AREA OF REINFORCEMENT AND BAR DIMENSIONS FROM THE 2 FEET AND 4 FEET TABULATED DESIGN FILLS. AREA OF REINFORCEMENT EQUALS BAR AREA PER FOOT SPACING.

SPECIAL DESIGNS ARE REQUIRED WHEN THE DESIGN FILL IS LESS THAN 1 FOOT OR GREATER THAN 50 FEET.

DIMENSIONS ARE IN INCHES UNLESS OTHERWISE SPECIFIED.

DESIGN FILLS ARE MEASURED FROM THE TOP OF TOP SLAB TO THE TOP OF EARTH FILL OR ROADWAY.

CULVERTS MEET STRENGTH AND SERVICEABILITY REQUIREMENTS FOR THE DESIGN VEHICULAR LIVE LOAD HL-93 MINUS THE LANE LOAD.

MISSOURI HIGHWAYS AND TRANSPORTATION COMMISSION
105 WEST CAPITOL
JEFFERSON CITY, MO 65102
1-888-ASK-MODOT (1-888-275-6636)

STATE OF MISSOURI
DENNIS W. HECKMAN
NUMBER PE-27141
PROFESSIONAL ENGINEER
THIS SHEET HAS BEEN SIGNED, SEALED AND DATED ELECTRONICALLY.

CONCRETE TRIPLE BOX CULVERT

MEMBER THICKNESS
BAR SIZE, SPACING & DIMENSIONS

SPAN (S): 14 FEET
HEIGHT (HT): 7 THRU 12 FEET

DATE EFFECTIVE: 12/01/2011
DATE PREPARED: 9/29/2011

703.87

SHEET NO.
22 OF 27

IF A SEAL IS PRESENT ON THIS SHEET IT HAS BEEN ELECTRONICALLY SEALED AND DATED.

IF A SEAL IS PRESENT ON THIS SHEET IT HAS BEEN ELECTRONICALLY SEALED AND DATED.

SPAN (S) = 14 FT HEIGHT (HT) = 13 FT OR 14 FT

DESIGN FILL	MEMBER THICKNESS				TOP SLAB BARS														BOTTOM SLAB BARS										WALL BARS				
					A1 BARS		J3 BARS					H1 BARS				H2 BARS				A2 BARS		J4 BARS				H3 BARS				B1 BARS		B2 BARS	
	TS	BS	TX	TI	SIZE	SPA.	SIZE	SPA.	C1	K2 HT=13'	K2 HT=14'	SIZE	SPA.	C5	Q8	SIZE	SPA.	C6	Q9	SIZE	SPA.	SIZE	SPA.	C4	K3 HT=13'	K3 HT=14'	SIZE	SPA.	C7	Q10	SIZE	SPA.	SIZE	SPA.	G1
1 FT	14	10	11	11	5	6	5	6.5	71.8	34.0	34.0	5	12	135.5	100.5	5	12	39.0	42.0	5	7	6	6	87.3	162	174	6	6	60.0	62.0	5	12	5	7.5	12
2 FT	15	11	11	11	6	8	5	6.5	71.8	35.0	35.0	6	16	139.5	107.5	6	16	45.0	48.0	5	6.5	6	6.5	83.4	163	175	6	6	59.0	62.0	5	12	5	7.5	12
4 FT	11	11	11	11	6	6.5	6	7	88.0	31.0	35.0	6	13	86.0	92.0	6	13	40.0	40.0	5	6.5	6	6	76.4	163	175	7	6.5	62.0	66.0	5	10.5	5	7.5	12
6 FT	12	12	11	11	6	8	6	7.5	74.5	32.0	36.0	6	13	68.0	75.0	6	13	38.0	39.0	5	6	6	6	71.3	164	176	7	6.5	60.0	65.0	5	12	5	7.5	12
8 FT	12	13	11	11	6	8	6	7	68.5	36.0	36.0	6	12	63.0	67.0	6	12	36.0	37.0	6	8	6	6.5	68.8	165	177	7	6.5	58.0	65.0	5	12	5	7.5	0
10 FT	13	15	11	11	6	7.5	6	6.5	66.0	37.0	37.0	6	12	60.0	65.0	6	12	36.0	37.0	6	7.5	6	6	67.4	167	179	6	6	55.0	63.0	5	12	5	7.5	0
12 FT	14	16	12	11	6	7.5	6	6.5	64.0	38.0	38.0	7	16	61.0	67.0	7	16	38.0	40.0	6	7	6	7	65.3	168	180	7	7	57.0	66.0	5	12	5	7	0
14 FT	16	17	13	11	6	7.5	6	7	69.1	40.0	40.0	6	12	63.0	69.0	6	12	41.0	43.0	6	7	6	6.5	63.6	169	181	7	7	57.0	65.0	5	12	5	6.5	0
16 FT	17	18	13	11	6	7	6	6.5	67.8	41.0	41.0	6	12	62.0	69.0	6	12	41.0	43.0	6	6	6	6.5	62.4	170	182	7	6.5	56.0	66.0	5	12	5	6.5	0
18 FT	18	20	13	11	6	7	6	6	66.6	42.0	42.0	7	15	66.0	74.0	7	15	46.0	48.0	6	6	6	6	61.9	172	184	7	7	56.0	66.0	5	12	5	6.5	0
20 FT	19	21	14	11	6	6.5	6	6	66.3	43.0	43.0	7	15	65.0	73.0	7	15	45.0	48.0	7	8	6	6.5	61.0	173	185	7	7	56.0	66.0	5	12	5	6	0
22 FT	21	23	14	11	6	6	7	8	70.6	45.0	45.0	7	15	64.0	73.0	7	15	45.0	48.0	7	7	6	6	60.8	175	187	7	7	56.0	66.0	5	12	5	6	0
24 FT	22	24	15	11	6	6	7	8	70.5	46.0	46.0	7	15	64.0	73.0	7	15	45.0	48.0	7	7	6	6.5	60.3	176	188	7	7	56.0	66.0	5	12	6	8	0
26 FT	23	25	15	11	7	7.5	7	7.5	69.9	47.0	47.0	7	14	64.0	73.0	7	14	45.0	48.0	7	6.5	6	6	59.6	177	189	7	6.5	56.0	67.0	5	12	6	8	0
28 FT	25	27	16	11	7	7	7	7.5	70.3	49.0	49.0	7	14	63.0	72.0	7	14	44.0	47.0	7	6.5	6	6.5	59.9	179	191	7	6	56.0	67.0	5	12	6	8	0
30 FT	26	28	16	11	7	7	7	7	69.8	50.0	50.0	7	13	62.0	72.0	7	13	43.0	46.0	7	6	6	6	59.4	180	192	7	6	56.0	67.0	5	12	6	8	0
32 FT	27	30	17	11	7	6.5	7	7.5	70.1	51.0	51.0	7	13	62.0	72.0	7	13	43.0	46.0	7	6	6	6.5	59.5	182	194	8	7.5	62.0	73.0	5	12	6	7.5	0
34 FT	28	31	17	11	7	6	7	6.5	69.8	52.0	52.0	7	12	62.0	71.0	7	12	43.0	45.0	7	6	6	6.5	59.1	183	195	8	7	62.0	73.0	5	12	6	7.5	0
36 FT	29	32	18	11	7	6	7	7	70.3	53.0	53.0	7	12	62.0	71.0	7	12	42.0	45.0	8	7.5	6	6.5	59.3	184	196	8	7	62.0	73.0	5	12	6	7	0
38 FT	31	33	19	11	8	7.5	7	7.5	71.0	55.0	55.0	8	15	70.0	78.0	8	15	48.0	50.0	8	7.5	6	6.5	59.6	185	197	8	6.5	62.0	73.0	5	12	6	6.5	0
40 FT	31	34	19	11	8	7	7	6.5	70.9	55.0	55.0	8	14	70.0	78.0	8	14	49.0	51.0	8	7	6	6.5	59.5	186	198	8	6.5	62.0	73.0	5	12	6	6.5	0
42 FT	32	35	20	11	8	7	7	7	71.5	56.0	56.0	8	14	69.0	77.0	8	14	49.0	51.0	8	7	6	6	59.8	187	199	8	6.5	62.0	74.0	5	12	6	6.5	0
44 FT	33	36	20	11	8	7	7	6.5	71.5	57.0	57.0	8	14	69.0	77.0	8	14	48.0	50.0	8	7	6	6	59.9	188	200	8	6	62.0	74.0	5	12	6	6.5	0
46 FT	34	37	20	11	8	7	7	7	70.1	58.0	58.0	8	14	69.0	76.0	8	14	47.0	49.0	8	7	6	6	58.5	189	201	8	6	62.0	74.0	5	12	6	6.5	0
48 FT	35	38	21	11	8	6.5	7	7	70.9	59.0	59.0	8	13	68.0	75.0	8	13	47.0	48.0	8	7	6	6	59.0	190	202	8	6	62.0	74.0	5	12	6	6	0
50 FT	36	39	21	11	8	6.5	7	6.5	70.9	60.0	60.0	8	13	68.0	75.0	8	13	47.0	48.0	8	6.5	6	6	59.1	191	203	8	6	62.0	74.0	5	12	6	6	0

SPAN (S) = 14 FT HEIGHT (HT) = 15 FT OR 16 FT

DESIGN FILL	MEMBER THICKNESS				TOP SLAB BARS														BOTTOM SLAB BARS										WALL BARS				
					A1 BARS		J3 BARS					H1 BARS				H2 BARS				A2 BARS		J4 BARS				H3 BARS				B1 BARS		B2 BARS	
	TS	BS	TX	TI	SIZE	SPA.	SIZE	SPA.	C1	K2 HT=15'	K2 HT=16'	SIZE	SPA.	C5	Q8	SIZE	SPA.	C6	Q9	SIZE	SPA.	SIZE	SPA.	C4	K3 HT=15'	K3 HT=16'	SIZE	SPA.	C7	Q10	SIZE	SPA.	SIZE	SPA.	G1
1 FT	14	11	12	13	5	6	5	6	72.6	34.0	34.0	5	12	136.5	101.5	5	12	38.0	41.0	5	6.5	6	6	103.4	187	199	6	6.5	62.0	63.0	5	11.5	5	7	12
2 FT	15	12	12	13	6	8	6	8	75.6	35.0	39.0	6	16	143.5	108.5	6	16	45.0	48.0	5	6	6	6.5	99.0	188	200	6	6.5	61.0	63.0	5	12	5	7	12
4 FT	12	12	12	13	6	8	6	7.5	75.6	36.0	36.0	6	15	138.5	89.0	6	15	40.0	41.0	5	6	6	6	90.1	188	200	6	6	60.0	63.0	5	12	5	7	12
6 FT	12	13	12	13	6	8	6	7	89.3	36.0	36.0	6	14	69.0	71.0	6	14	38.0	39.0	5	6	6	6	86.4	189	201	6	6	58.0	63.0	5	12	5	6.5	12
8 FT	12	14	13	13	6	8	6	6.5	78.1	36.0	36.0	6	12	64.0	66.0	6	12	37.0	37.0	6	8	6	6	81.9	190	202	6	6	57.0	62.0	5	12	5	6.5	0
10 FT	13	15	13	13	6	8	6	6.5	75.1	37.0	37.0	6	12	61.0	64.0	6	12	37.0	37.0	6	7.5	6	6.5	79.1	191	203	7	7	59.0	65.0	5	12	5	6.5	0
12 FT	14	16	14	13	6	7.5	6	6.5	72.9	38.0	38.0	6	12	59.0	63.0	6	12	36.0	37.0	6	7	6	6.5	75.6	192	204	7	7	58.0	65.0	5	12	5	6	0
14 FT	15	17	15	13	6	7.5	6	6.5	77.6	39.0	39.0	7	16	69.0	73.0	7	16	47.0	48.0	6	7	6	6.5	73.6	193	205	7	7	58.0	65.0	5	12	6	8	0
16 FT	17	19	15	13	6	7.5	6	6	77.6	41.0	41.0	6	12	63.0	68.0	6	12	42.0	44.0	6	6	6	6	73.5	195	207	6	6	55.0	63.0	5	12	6	8	0
18 FT	18	20	15	13	6	7	7	7.5	81.8	42.0	48.0	7	16	67.0	73.0	7	16	46.0	49.0	6	6	7	7	75.6	196	208	7	7	57.0	66.0	5	12	6	8	0
20 FT	19	21	16	13	6	6.5	7	7.5	81.1	43.0	49.0	7	15	66.0	73.0	7	15	46.0	49.0	7	7.5	7	7.5	74.8	197	209	7	7	57.0	66.0	5	12	6	8	0
22 FT	20	23	17	13	6	6	7	7.5	80.8	44.0	50.0	7	15	65.0	73.0	7	15	46.0	49.0	7	7	7	7.5	74.6	199	211	7	7	57.0	66.0	5	12	6	7.5	0
24 FT	22	24	17	13	6	6	7	7	80.8	46.0	52.0	7	15	65.0	73.0	7	15	46.0	49.0	7	7	7	7	74.1	200	212	7	7	57.0	66.0	5	12	6	7.5	0
26 FT	23	25	18	13	7	7.5	7	7	80.5	47.0	53.0	7	15	65.0	72.0	7	15	46.0	49.0	7	6	7	7.5	73.6	201	213	7	6	57.0	67.0	5	12	6	7	0
28 FT	24	27	19	13	7	7.5	7	7	80.5	48.0	54.0	7	14	64.0	72.0	7	14	45.0	48.0	7	6.5	7	8	73.8	203	215	7	6	57.0	67.0	5	12	6	6.5	0
30 FT	25	28	20	13	7	6.5	7	7	80.6	49.0	55.0	7	13	64.0	72.0	7	13	45.0	48.0	7	6	7	8	73.5	204	216	7	6	57.0	67.0	5	12	6	6.5	0
32 FT	27	30	21	13	7	6.5	7	7	81.1	51.0	51.0	7	13	63.0	71.0	7	13	43.0	46.0	7	6	6	6	70.8	206	218	8	7.5	63.0	73.0	5	12	6	6	0
34 FT	28	31	21	13	7	6.5	7	7	80.9	52.0	52.0	7	12	63.0	71.0	7	12	43.0	46.0	7	6	6	6	70.4	207	219	8	7	63.0	73.0	5	12	6	6	0
36 FT	29	32	22	13	7	6	7	7	81.1	59.0	59.0	7	12	63.0	71.0	7	12	43.0	45.0	8	7.5	7	7.5	73.3	208	220	8	7	63.0	73.0	5	12	6	6	0
38 FT	30	33	22	13	7	6	7	6	81.1	60.0	60.0	7	12	63.0	71.0	7	12	42.0	45.0	8	7.5	7	7	73.4	209	221	8	6.5	63.0	74.0	5	12	6	6	0
40 FT	31	34	23	13	8	7.5	7	6.5	81.8	61.0	61.0	8	15	70.0	78.0	8	15	50.0	52.0	8	7	7	7.5	73.5	210	222	8	6.5	63.0	74.0	5	12	7	7.5	0
42 FT	32	35	24	13	8	7.5	7	6.5	82.3	62.0	62.0	8	14	70.0	78.0	8	14	49.0	51.0	8	6.5	7	7	73.8	211	223	8	6.5	63.0	74.0	5	12	7	7.5	0
44 FT	33	36	24	13	8	7	7	6	82.4	63.0	63.0	8	14	70.0	77.0	8	14	49.0	50.0	8	6.5	7	7	73.9	212	224	8	6	63.0	74.0	5	12	7	7.5	0
46 FT	34	38	26	13	8	7	7	6	83.8	64.0	64.0	8	14	70.0	76.0	8	14	48.0	49.0	8	7	7	7	74.6	214	226	8	6.5	63.0	74.0	5	12	7	7.5	0
48 FT	35	38	26	13	8	6.5	7	6.5	82.1	65.0	65.0	8	13	69.0	76.0	8	13	48.0	49.0	8	6.5	7	7	72.6	214	226	8	6	63.0	74.0	5	12	7	8	0
50 FT	35	39	26	13	8	6.5	7	6	82.1	65.0	65.0	8	13	69.0	76.0	8	13	48.0	50.0	8	6.5	7	6.5	72.8	215	227	8	6	63.0	74.0	5	12	7	7.5	0

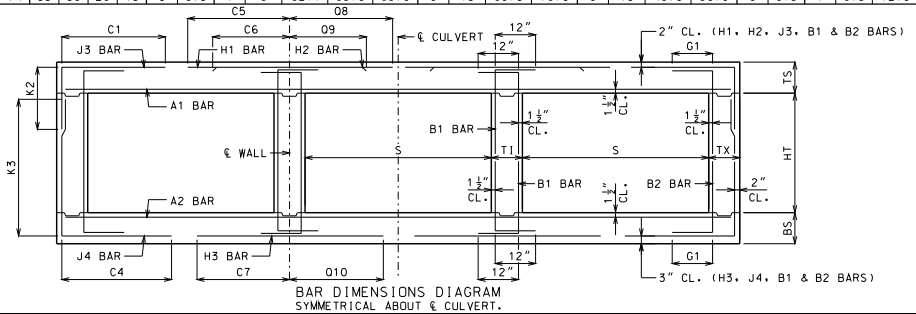

BAR DIMENSIONS DIAGRAM
SYMMETRICAL ABOUT ℄ CULVERT.

GENERAL NOTES:

IF DESIGN FILL IS BETWEEN TABULATED DESIGN FILLS, USE THE NEXT GREATER TABULATED DESIGN FILL, EXCEPT FOR DESIGN FILLS BETWEEN 2 FEET AND 4 FEET. FOR DESIGN FILLS BETWEEN 2 FEET AND 4 FEET USE THE GREATER MEMBER THICKNESS, AREA OF REINFORCEMENT AND BAR DIMENSIONS FROM THE 2 FEET AND 4 FEET TABULATED DESIGN FILLS. AREA OF REINFORCEMENT EQUALS BAR AREA PER FOOT SPACING.

SPECIAL DESIGNS ARE REQUIRED WHEN THE DESIGN FILL IS LESS THAN 1 FOOT OR GREATER THAN 50 FEET.

DIMENSIONS ARE IN INCHES UNLESS OTHERWISE SPECIFIED.

DESIGN FILLS ARE MEASURED FROM THE TOP OF TOP SLAB TO THE TOP OF EARTH FILL OR ROADWAY.

CULVERTS MEET STRENGTH AND SERVICEABILITY REQUIREMENTS FOR THE DESIGN VEHICULAR LIVE LOAD HL-93 MINUS THE LANE LOAD.

MISSOURI HIGHWAYS AND TRANSPORTATION COMMISSION
105 WEST CAPITOL
JEFFERSON CITY, MO 65102
1-888-ASK-MODOT (1-888-275-6636)

STATE OF MISSOURI
DENNIS W. HECKMAN
NUMBER PE-27141
PROFESSIONAL ENGINEER
THIS SHEET WAS SIGNED, SEALED AND DATED ELECTRONICALLY.

CONCRETE TRIPLE BOX CULVERT

MEMBER THICKNESS
BAR SIZE, SPACING & DIMENSIONS

SPAN (S): 14 FEET
HEIGHT (HT): 13 THRU 16 FEET

DATE EFFECTIVE: 12/01/2011
DATE PREPARED: 9/29/2011

703.87

SHEET NO.
23 OF 27

SPAN (S) = 15 FT HEIGHT (HT) = 8 FT OR 9 FT OR 10 FT

DESIGN FILL	MEMBER THICKNESS				TOP SLAB BARS														BOTTOM SLAB BARS												WALL BARS				
					A1 BARS		J3 BARS			K2			H1 BARS				H2 BARS				A2 BARS		J4 BARS			K3			H3 BARS				B1 BARS		B2 BARS		
	TS	BS	TX	TI	SIZE	SPA.	SIZE	SPA.	C1	HT=8′	HT=9′	HT=10′	SIZE	SPA.	C5	Q8	SIZE	SPA.	C6	Q9	SIZE	SPA.	SIZE	SPA.	C4	HT=8′	HT=9′	HT=10′	SIZE	SPA.	C7	Q10	SIZE	SPA.	SIZE	SPA.	G1
1 FT	15	10	8	8	6	8	5	8	72.9	35.0	35.0	35.0	6	16	146.5	111.5	6	16	48.0	53.0	5	7	7	6.5	69.0	102	114	126	6	6	61.0	65.0	5	12	5	12	12
2 FT	15	11	9	8	6	7.5	5	8	73.5	35.0	35.0	35.0	6	16	146.5	111.5	6	16	49.0	53.0	5	6.5	6	7	60.4	103	115	127	6	6	59.0	65.0	5	12	5	12	12
4 FT	12	11	9	8	6	6.5	6	7	60.8	32.0	36.0	36.0	6	12	84.0	109.0	6	12	40.0	43.0	5	6.5	6	6.5	53.9	103	115	127	7	6.5	61.0	68.0	5	11.5	5	12	12
6 FT	12	12	9	8	6	7	6	6.5	53.5	32.0	32.0	36.0	7	16	72.0	86.0	7	16	41.0	43.0	6	8	6	7	49.9	104	116	128	7	6.5	60.0	68.0	5	12	5	12	12
8 FT	13	14	9	8	6	7	6	7	49.5	33.0	33.0	33.0	7	15	67.0	77.0	7	15	39.0	42.0	6	8	5	6.5	43.4	106	118	130	7	7	58.0	69.0	5	12	5	12	0
10 FT	14	15	9	8	6	7	6	7.5	46.6	34.0	34.0	34.0	7	15	64.0	73.0	7	15	39.0	41.0	6	7.5	5	6.5	41.5	107	119	131	7	6.5	58.0	69.0	5	12	5	12	0
12 FT	15	16	9	8	6	6	6	7.5	50.4	35.0	35.0	35.0	7	14	70.0	80.0	7	14	46.0	49.0	6	6	5	6	40.0	108	120	132	7	6.5	57.0	69.0	5	12	5	11.5	0
14 FT	17	18	9	8	6	6.5	6	7.5	48.4	37.0	37.0	37.0	7	15	68.0	79.0	7	15	46.0	49.0	6	6.5	5	6	38.9	110	122	134	7	6.5	57.0	69.0	5	12	5	9.5	0
16 FT	18	19	9	8	6	6.5	6	7.5	47.1	38.0	38.0	42.0	7	14	67.0	79.0	7	14	45.0	49.0	6	6	6	8.5	41.0	111	123	135	7	6.5	57.0	69.0	5	12	5	8.5	0
18 FT	19	21	10	8	6	6	6	7.5	47.8	39.0	39.0	39.0	7	14	66.0	78.0	7	14	45.0	49.0	7	8	5	6.5	37.9	113	125	137	7	6.5	57.0	70.0	5	12	5	9.5	0
20 FT	21	22	10	8	6	6	6	7.5	46.6	41.0	41.0	41.0	7	14	66.0	78.0	7	14	45.0	49.0	7	7.5	5	6	37.5	114	126	138	7	6.5	56.0	70.0	5	12	5	8	0
22 FT	23	24	10	8	7	7.5	6	7.5	46.0	43.0	43.0	43.0	7	14	65.0	77.0	7	14	45.0	49.0	7	7	5	6	37.3	116	128	140	7	6.5	56.0	70.0	5	12	5	8	0
24 FT	24	25	11	8	7	7.5	6	8	46.5	44.0	44.0	44.0	7	13	64.0	77.0	7	13	45.0	49.0	7	6.5	5	6.5	37.5	117	129	141	7	6.5	56.0	70.0	5	12	5	7.5	0
26 FT	25	27	11	8	7	7	6	7.5	46.4	45.0	45.0	45.0	7	13	64.0	77.0	7	13	44.0	48.0	7	6.5	5	6	37.1	119	131	143	7	6	56.0	70.0	5	12	5	7.5	0
28 FT	27	28	11	8	7	6.5	6	7.5	45.8	47.0	47.0	47.0	7	13	64.0	76.0	7	13	44.0	48.0	7	6	5	6	37.1	120	132	144	7	6	56.0	70.0	5	12	5	7.5	0
30 FT	28	30	12	8	7	6.5	6	7.5	46.8	52.0	52.0	52.0	7	12	63.0	76.0	7	12	43.0	47.0	8	7.5	6	8	40.4	122	134	146	8	7.5	62.0	76.0	5	12	5	7	0
32 FT	30	31	12	8	7	6	6	7.5	46.3	54.0	54.0	54.0	7	12	63.0	75.0	7	12	42.0	45.0	8	7.5	6	7.5	40.5	123	135	147	8	7	62.0	76.0	5	12	5	7	0
34 FT	31	32	12	8	8	7.5	6	7.5	46.1	55.0	55.0	55.0	8	15	71.0	83.0	8	15	50.0	53.0	8	6.5	6	7.5	40.3	124	136	148	8	6.5	62.0	76.0	5	12	5	7	0
36 FT	32	34	12	8	8	7.5	6	7	46.1	56.0	56.0	56.0	8	14	71.0	82.0	8	14	49.0	52.0	8	7	6	7	40.3	126	138	150	8	6.5	62.0	76.0	5	12	5	7	0
38 FT	33	35	13	8	8	7	6	7	47.0	57.0	57.0	57.0	8	14	71.0	82.0	8	14	49.0	51.0	8	7	6	6.5	40.8	127	139	151	8	6.5	62.0	76.0	5	12	5	6.5	0
40 FT	34	36	13	8	8	7	6	6.5	46.9	58.0	58.0	58.0	8	14	70.0	81.0	8	14	49.0	51.0	8	6.5	6	6.5	40.8	128	140	152	8	6	62.0	76.0	5	12	5	6.5	0
42 FT	35	37	13	8	8	6.5	6	6.5	46.9	59.0	59.0	59.0	8	13	70.0	81.0	8	13	48.0	50.0	8	6	6	6.5	40.9	129	141	153	8	6	62.0	76.0	5	12	5	6.5	0
44 FT	36	38	13	8	8	6.5	6	6.5	46.9	60.0	60.0	60.0	8	13	70.0	80.0	8	13	48.0	49.0	8	6	6	6	41.0	130	142	154	8	6	62.0	76.0	5	12	5	6	0
46 FT	37	39	13	8	8	6.5	6	6	46.9	61.0	61.0	61.0	8	12	70.0	79.0	8	12	47.0	49.0	8	6	6	6	41.1	131	143	155	8	6	62.0	76.0	5	12	6	8	0
48 FT	38	41	13	8	8	6	6	6	46.1	62.0	62.0	62.0	8	12	69.0	78.0	8	12	46.0	48.0	8	6.5	7	7	43.3	133	145	157	9	7.5	68.0	82.0	5	12	6	8	0
50 FT	39	42	14	8	8	6	6	6	47.1	63.0	63.0	63.0	8	12	69.0	77.0	8	12	46.0	47.0	8	6.5	7	7.5	43.9	134	146	158	9	7	68.0	82.0	5	12	5	6	0

SPAN (S) = 15 FT HEIGHT (HT) = 11 FT OR 12 FT OR 13 FT

DESIGN FILL	MEMBER THICKNESS				TOP SLAB BARS														BOTTOM SLAB BARS												WALL BARS				
					A1 BARS		J3 BARS			K2			H1 BARS				H2 BARS				A2 BARS		J4 BARS			K3			H3 BARS				B1 BARS		B2 BARS		
	TS	BS	TX	TI	SIZE	SPA.	SIZE	SPA.	C1	HT=11′	HT=12′	HT=13′	SIZE	SPA.	C5	Q8	SIZE	SPA.	C6	Q9	SIZE	SPA.	SIZE	SPA.	C4	HT=11′	HT=12′	HT=13′	SIZE	SPA.	C7	Q10	SIZE	SPA.	SIZE	SPA.	G1
1 FT	15	11	9	10	6	8	5	6.5	73.9	35.0	35.0	35.0	6	16	147.5	112.5	6	16	48.0	52.0	5	6.5	6	6	89.3	139	151	163	6	6.5	63.0	67.0	5	12	5	8.5	12
2 FT	15	11	10	10	6	7.5	5	6.5	74.5	35.0	35.0	35.0	6	16	147.5	112.5	6	16	49.0	53.0	5	6.5	6	6	77.1	139	151	163	6	6	61.0	65.0	5	12	5	8	12
4 FT	12	12	10	10	6	7	6	7.5	77.5	32.0	36.0	36.0	6	13	89.0	107.0	6	13	41.0	43.0	5	6	6	6.5	71.3	140	152	164	6	6	60.0	67.0	5	10	5	8	12
6 FT	12	12	10	10	6	7	6	7	67.9	32.0	36.0	36.0	7	16	74.0	83.0	7	16	41.0	43.0	6	8	6	6	65.1	140	152	164	7	6	61.0	68.0	5	12	5	8	12
8 FT	13	14	10	10	6	7.5	6	6.5	63.0	33.0	37.0	37.0	7	16	69.0	75.0	7	16	40.0	42.0	6	7.5	6	6	62.3	142	154	166	7	6.5	60.0	69.0	5	12	5	8	0
10 FT	14	15	10	10	6	7	6	6.5	59.4	34.0	38.0	38.0	7	15	66.0	73.0	7	15	40.0	42.0	6	7	7	6.5	62.4	143	155	167	7	6.5	59.0	69.0	5	12	5	8	0
12 FT	15	17	11	10	6	7	6	6.5	63.5	35.0	35.0	39.0	7	14	71.0	79.0	7	14	47.0	49.0	6	7	6	7	57.5	145	157	169	7	7	59.0	69.0	5	12	5	7.5	0
14 FT	17	18	12	10	6	7	6	6.5	62.4	37.0	41.0	41.0	7	15	70.0	78.0	7	15	47.0	49.0	6	6.5	6	7	56.4	146	158	170	7	6.5	58.0	69.0	5	12	5	7	0
16 FT	18	19	12	10	6	6.5	6	6.5	61.1	38.0	42.0	42.0	7	14	68.0	78.0	7	14	46.0	49.0	6	6	6	7	55.4	147	159	171	7	6.5	58.0	69.0	5	12	5	7	0
18 FT	19	21	12	10	6	6	6	6	60.4	39.0	43.0	43.0	7	14	68.0	77.0	7	14	46.0	49.0	7	8	6	6	54.6	149	161	173	7	6.5	58.0	70.0	5	12	5	7	0
20 FT	21	22	13	10	6	6	6	6	60.3	41.0	45.0	45.0	7	14	67.0	77.0	7	14	46.0	49.0	7	7	6	6.5	54.5	150	162	174	7	6.5	58.0	70.0	5	12	5	6.5	0
22 FT	22	24	13	10	6	6	6	6	59.6	42.0	46.0	46.0	7	14	66.0	77.0	7	14	46.0	49.0	7	7	6	6.5	54.0	152	164	176	7	6.5	58.0	70.0	5	12	5	6.5	0
24 FT	24	25	14	10	7	7.5	6	6	59.8	44.0	48.0	48.0	7	14	66.0	77.0	7	14	45.0	49.0	7	6.5	6	7	54.1	153	165	177	7	6.5	58.0	70.0	5	12	5	6	0
26 FT	25	27	14	10	7	7	6	6	59.5	45.0	49.0	49.0	7	13	65.0	76.0	7	13	45.0	49.0	7	6.5	6	7	53.8	155	167	179	7	6	58.0	70.0	5	12	5	6	0
28 FT	26	28	15	10	7	6.5	6	6	59.9	50.0	50.0	50.0	7	13	65.0	76.0	7	13	45.0	49.0	7	6	6	7	53.9	156	168	180	7	6	58.0	70.0	5	12	6	8	0
30 FT	28	30	15	10	7	6.5	7	8	64.5	52.0	52.0	52.0	7	12	64.0	76.0	7	12	44.0	47.0	8	7.5	6	7	53.8	158	170	182	8	7.5	64.0	76.0	5	12	6	8	0
32 FT	29	31	15	10	7	6	7	7	64.3	53.0	53.0	53.0	7	12	64.0	75.0	7	12	44.0	47.0	8	7.5	6	6.5	53.5	159	171	183	8	7	64.0	76.0	5	12	6	8	0
34 FT	31	32	16	10	8	7.5	6	6	59.6	55.0	55.0	55.0	8	15	72.0	83.0	8	15	50.0	53.0	8	6.5	6	7	53.8	160	172	184	8	6.5	64.0	76.0	5	12	6	8	0
36 FT	32	34	16	10	8	7.5	7	7	64.5	56.0	56.0	56.0	8	14	72.0	82.0	8	14	50.0	52.0	8	7	6	7	53.8	162	174	186	8	6.5	63.0	77.0	5	12	6	8	0
38 FT	33	35	17	10	8	7	7	7.5	65.1	57.0	57.0	57.0	8	14	71.0	82.0	8	14	49.0	52.0	8	7	6	6.5	54.0	163	175	187	8	6.5	63.0	77.0	5	12	6	7.5	0
40 FT	34	36	17	10	8	7	7	7	65.1	58.0	58.0	58.0	8	14	71.0	81.0	8	14	49.0	51.0	8	6.5	6	6.5	54.0	164	176	188	8	6	63.0	77.0	5	12	6	7.5	0
42 FT	35	37	18	10	8	6.5	7	7.5	65.9	59.0	59.0	59.0	8	13	71.0	80.0	8	13	49.0	50.0	8	6	6	6.5	54.4	165	177	189	8	6	64.0	77.0	5	12	6	7	0
44 FT	36	39	18	10	8	6.5	7	7	66.0	60.0	60.0	60.0	8	13	71.0	80.0	8	13	48.0	50.0	8	6.5	6	6	54.6	167	179	191	8	6	63.0	77.0	5	12	6	7	0
46 FT	37	40	19	10	8	6.5	7	7.5	66.8	61.0	61.0	61.0	8	12	70.0	79.0	8	12	48.0	49.0	8	6.5	6	6	55.0	168	180	192	9	7.5	70.0	83.0	5	12	6	6.5	0
48 FT	38	41	19	10	8	6	7	6.5	66.8	62.0	62.0	68.0	8	12	70.0	78.0	8	12	47.0	48.0	8	6.5	7	8	58.1	169	181	193	9	7	70.0	83.0	5	12	6	6.5	0
50 FT	39	42	19	10	8	6	7	7	65.6	63.0	63.0	69.0	8	12	70.0	77.0	8	12	47.0	48.0	8	6.5	7	7.5	57.0	170	182	194	9	7	69.0	83.0	5	12	6	6.5	0

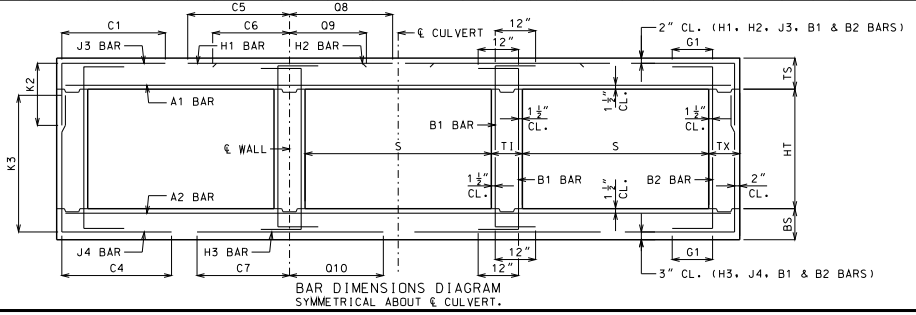

BAR DIMENSIONS DIAGRAM
SYMMETRICAL ABOUT ℄ CULVERT.

GENERAL NOTES:

IF DESIGN FILL IS BETWEEN TABULATED DESIGN FILLS, USE THE NEXT GREATER TABULATED DESIGN FILL, EXCEPT FOR DESIGN FILLS BETWEEN 2 FEET AND 4 FEET. FOR DESIGN FILLS BETWEEN 2 FEET AND 4 FEET USE THE GREATER MEMBER THICKNESS, AREA OF REINFORCEMENT AND BAR DIMENSIONS FROM THE 2 FEET AND 4 FEET TABULATED DESIGN FILLS. AREA OF REINFORCEMENT EQUALS BAR AREA PER FOOT SPACING.

SPECIAL DESIGNS ARE REQUIRED WHEN THE DESIGN FILL IS LESS THAN 1 FOOT OR GREATER THAN 50 FEET.

DIMENSIONS ARE IN INCHES UNLESS OTHERWISE SPECIFIED.

DESIGN FILLS ARE MEASURED FROM THE TOP OF TOP SLAB TO THE TOP OF EARTH FILL OR ROADWAY.

CULVERTS MEET STRENGTH AND SERVICEABILITY REQUIREMENTS FOR THE DESIGN VEHICULAR LIVE LOAD HL-93 MINUS THE LANE LOAD.

MISSOURI HIGHWAYS AND TRANSPORTATION COMMISSION
105 WEST CAPITOL
JEFFERSON CITY, MO 65102
1-888-ASK-MODOT (1-888-275-6636)

STATE OF MISSOURI — DENNIS W. HECKMAN — NUMBER PE-27141 — PROFESSIONAL ENGINEER
THIS SHEET HAS BEEN SIGNED, SEALED AND DATED ELECTRONICALLY.

CONCRETE TRIPLE BOX CULVERT

MEMBER THICKNESS
BAR SIZE, SPACING & DIMENSIONS

SPAN (S): 15 FEET
HEIGHT (HT): 8 THRU 13 FEET

DATE EFFECTIVE: 12/01/2011
DATE PREPARED: 9/29/2011

703.87

SHEET NO. 24 OF 27

IF A SEAL IS PRESENT ON THIS SHEET IT HAS BEEN ELECTRONICALLY SEALED AND DATED.

SPAN (S) = 15 FT HEIGHT (HT) = 14 FT OR 15 FT OR 16 FT

DESIGN FILL	MEMBER THICKNESS				TOP SLAB BARS														BOTTOM SLAB BARS												WALL BARS				
					A1 BARS		J3 BARS						H1 BARS				H2 BARS				A2 BARS		J4 BARS						H3 BARS				B1 BARS		B2 BARS	
	TS	BS	TX	TI	SIZE	SPA.	SIZE	SPA.	C1	K2 HT=14'	K2 HT=15'	K2 HT=16'	SIZE	SPA.	C5	Q8	SIZE	SPA.	C6	Q9	SIZE	SPA.	SIZE	SPA.	C4	K3 HT=14'	K3 HT=15'	K3 HT=16'	SIZE	SPA.	C7	Q10	SIZE	SPA.	SIZE	SPA.	G1
1 FT	15	11	12	13	6	8	6	8	79.3	35.0	35.0	39.0	6	16	152.5	114.5	6	16	48.0	51.0	5	6.5	6	6	99.0	175	187	199	6	6	64.0	65.0	5	11.5	5	7	12
2 FT	15	12	12	13	6	8	6	8	79.3	35.0	35.0	39.0	6	16	152.5	114.5	6	16	49.0	52.0	5	6	6	6.5	95.5	176	188	200	6	6	63.0	66.0	5	11.5	5	7	12
4 FT	12	12	12	13	6	7	6	7	111.5	36.0	36.0	36.0	6	13	99.0	91.0	6	13	41.0	42.0	5	6	6	6	88.6	176	188	200	7	6.5	65.0	69.0	5	9.5	5	7	12
6 FT	12	13	12	13	6	7.5	6	6.5	85.6	36.0	36.0	36.0	6	12	71.0	73.0	6	12	40.0	40.0	6	8	6	6	84.0	177	189	201	7	6.5	64.0	69.0	5	12	5	6.5	12
8 FT	13	14	13	13	6	7.5	6	7	77.4	37.0	37.0	37.0	6	12	67.0	70.0	6	12	38.0	39.0	6	7.5	6	6	78.1	178	190	202	7	6.5	62.0	68.0	5	12	5	6.5	0
10 FT	14	16	13	13	6	7.5	6	6	75.0	38.0	38.0	38.0	7	15	67.0	71.0	7	15	41.0	42.0	6	7	6	6	77.0	180	192	204	7	7	61.0	69.0	5	12	5	6.5	0
12 FT	15	17	14	13	6	7	6	6	78.9	39.0	39.0	39.0	7	15	73.0	78.0	7	15	48.0	50.0	6	7	6	6.5	74.8	181	193	205	7	6.5	60.0	69.0	5	12	5	6	0
14 FT	16	18	15	13	6	7	6	6	77.5	40.0	40.0	40.0	7	14	71.0	77.0	7	14	48.0	49.0	6	6.5	6	6.5	73.0	182	194	206	7	6.5	60.0	69.0	5	12	6	8	0
16 FT	18	20	15	13	6	7	7	8	81.9	42.0	42.0	42.0	7	15	70.0	77.0	7	15	48.0	50.0	6	6	6	6	72.4	184	196	208	7	7	60.0	69.0	5	12	6	8	0
18 FT	19	21	15	13	6	6.5	7	7	80.8	43.0	43.0	49.0	7	14	69.0	77.0	7	14	48.0	50.0	7	8	7	7	74.4	185	197	209	7	6.5	60.0	69.0	5	12	6	8	0
20 FT	20	23	16	13	6	6	7	7	80.3	44.0	44.0	50.0	7	14	69.0	76.0	7	14	47.0	50.0	7	7	7	7.5	74.0	187	199	211	7	7	59.0	70.0	5	12	6	8	0
22 FT	22	24	17	13	6	6	7	7.5	80.1	46.0	46.0	52.0	7	14	68.0	76.0	7	14	47.0	50.0	7	7	7	7.5	73.3	188	200	212	7	6.5	59.0	70.0	5	12	6	7.5	0
24 FT	23	25	17	13	7	7.5	7	7	79.4	47.0	47.0	53.0	7	14	67.0	76.0	7	14	47.0	50.0	7	6	7	7	72.5	189	201	213	7	6	59.0	70.0	5	12	6	7.5	0
26 FT	25	27	18	13	7	7	7	7	79.6	49.0	49.0	55.0	7	14	67.0	76.0	7	14	47.0	50.0	7	6.5	7	7.5	72.5	191	203	215	7	6	59.0	70.0	5	12	6	7	0
28 FT	26	29	19	13	7	7	7	7	79.6	50.0	50.0	50.0	7	13	66.0	76.0	7	13	46.0	50.0	7	6	6	6	69.5	193	205	217	8	7.5	65.0	76.0	5	12	6	6.5	0
30 FT	27	30	19	13	7	6.5	7	6.5	79.3	51.0	51.0	57.0	7	13	66.0	76.0	7	13	46.0	49.0	8	7.5	7	7.5	72.1	194	206	218	8	7.5	65.0	77.0	5	12	6	6.5	0
32 FT	29	31	20	13	7	6	7	7	79.5	53.0	53.0	59.0	7	12	65.0	75.0	7	12	44.0	47.0	8	7	7	8	71.9	195	207	219	8	7	65.0	77.0	5	12	6	6.5	0
34 FT	30	33	21	13	7	6	7	7	79.9	54.0	54.0	54.0	7	12	65.0	75.0	7	12	44.0	47.0	8	7	6	6	69.0	197	209	221	8	6.5	65.0	77.0	5	12	6	6	0
36 FT	31	34	22	13	8	7.5	7	6.5	80.1	55.0	61.0	61.0	8	15	73.0	82.0	8	15	52.0	55.0	8	7	7	7.5	71.9	198	210	222	8	6.5	65.0	77.0	5	12	6	6	0
38 FT	32	35	22	13	8	7	7	6	79.8	56.0	62.0	62.0	8	14	73.0	82.0	8	14	52.0	54.0	8	6.5	7	7.5	71.6	199	211	223	8	6.5	65.0	77.0	5	12	6	6	0
40 FT	33	36	23	13	8	6.5	7	6.5	80.4	57.0	63.0	63.0	8	13	73.0	82.0	8	13	51.0	54.0	8	6	7	7.5	71.8	200	212	224	8	6	65.0	77.0	5	12	7	7.5	0
42 FT	34	38	24	13	8	6.5	7	6.5	81.1	58.0	64.0	64.0	8	13	72.0	81.0	8	13	51.0	53.0	8	6.5	7	7	72.4	202	214	226	8	6	65.0	78.0	5	12	7	7.5	0
44 FT	35	39	25	13	8	6.5	7	6.5	81.9	59.0	65.0	65.0	8	13	72.0	81.0	8	13	50.0	52.0	8	6.5	7	7	72.5	203	215	227	8	6	65.0	78.0	5	12	7	7.5	0
46 FT	36	40	26	13	8	6.5	7	6.5	82.5	60.0	66.0	66.0	8	13	72.0	80.0	8	13	50.0	52.0	8	6.5	7	7	72.9	204	216	228	9	7.5	71.0	84.0	5	12	7	8	0
48 FT	37	41	27	13	8	6.5	7	6	83.3	67.0	67.0	67.0	8	12	72.0	79.0	8	12	49.0	51.0	8	6.5	7	7	73.1	205	217	229	9	7	71.0	84.0	5	12	7	8	0
50 FT	38	42	27	13	8	6	7	6.5	81.8	68.0	68.0	68.0	8	12	71.0	79.0	8	12	49.0	50.0	8	6	7	7	71.4	206	218	230	9	7	71.0	84.0	5	12	6	6	0

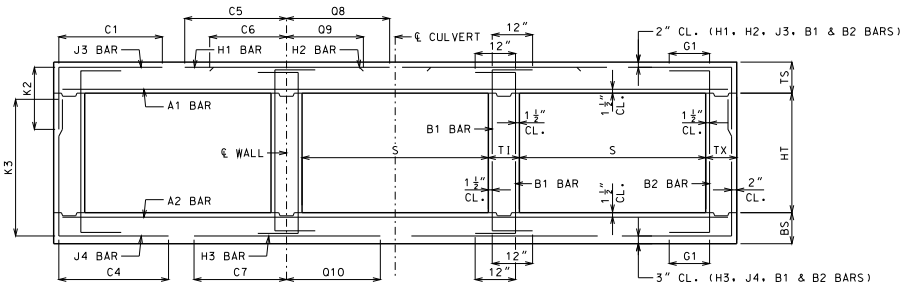

BAR DIMENSIONS DIAGRAM
SYMMETRICAL ABOUT ℄ CULVERT.

GENERAL NOTES:

IF DESIGN FILL IS BETWEEN TABULATED DESIGN FILLS, USE THE NEXT GREATER TABULATED DESIGN FILL, EXCEPT FOR DESIGN FILLS BETWEEN 2 FEET AND 4 FEET. FOR DESIGN FILLS BETWEEN 2 FEET AND 4 FEET USE THE GREATER MEMBER THICKNESS, AREA OF REINFORCEMENT AND BAR DIMENSIONS FROM THE 2 FEET AND 4 FEET TABULATED DESIGN FILLS. AREA OF REINFORCEMENT EQUALS BAR AREA PER FOOT SPACING.

SPECIAL DESIGNS ARE REQUIRED WHEN THE DESIGN FILL IS LESS THAN 1 FOOT OR GREATER THAN 50 FEET.

DIMENSIONS ARE IN INCHES UNLESS OTHERWISE SPECIFIED.

DESIGN FILLS ARE MEASURED FROM THE TOP OF TOP SLAB TO THE TOP OF EARTH FILL OR ROADWAY.

CULVERTS MEET STRENGTH AND SERVICEABILITY REQUIREMENTS FOR THE DESIGN VEHICULAR LIVE LOAD HL-93 MINUS THE LANE LOAD.

MISSOURI HIGHWAYS AND TRANSPORTATION COMMISSION
105 WEST CAPITOL
JEFFERSON CITY, MO 65102
1-888-ASK-MODOT (1-888-275-6636)

STATE OF MISSOURI
DENNIS W. HECKMAN
NUMBER PE-27141
PROFESSIONAL ENGINEER
THIS SHEET HAS BEEN SIGNED, SEALED AND DATED ELECTRONICALLY.

CONCRETE TRIPLE BOX CULVERT

MEMBER THICKNESS
BAR SIZE, SPACING & DIMENSIONS

SPAN (S): 15 FEET
HEIGHT (HT): 14 THRU 16 FEET

DATE EFFECTIVE: 12/01/2011
DATE PREPARED: 9/29/2011

703.87

SHEET NO.
25 OF 27

IF A SEAL IS PRESENT ON THIS SHEET IT HAS BEEN ELECTRONICALLY SEALED AND DATED.

SPAN (S) = 16 FT HEIGHT (HT) = 8 FT OR 9 FT OR 10 FT

DESIGN FILL	MEMBER THICKNESS				TOP SLAB BARS														BOTTOM SLAB BARS														WALL BARS				
					A1 BARS		J3 BARS					H1 BARS				H2 BARS				A2 BARS		J4 BARS						H3 BARS				B1 BARS		B2 BARS		
	TS	BS	TX	TI	SIZE	SPA.	SIZE	SPA.	C1	K2 HT=8′	K2 HT=9′	K2 HT=10′	SIZE	SPA.	C5	Q8	SIZE	SPA.	C6	Q9	SIZE	SPA.	SIZE	SPA.	C4	K3 HT=8′	K3 HT=9′	K3 HT=10′	SIZE	SPA.	C7	Q10	SIZE	SPA.	SIZE	SPA.	G1
1 FT	15	10	9	8	6	7.5	5	8	77.1	35.0	35.0	35.0	6	16	154.5	117.5	6	16	52.0	57.0	5	7	6	6	64.6	102	114	126	7	6.5	66.0	71.0	5	12	5	12	12
2 FT	16	11	9	8	6	7	5	8	77.1	36.0	36.0	36.0	6	14	154.5	117.5	6	14	48.0	53.0	5	6.5	6	6.5	59.3	103	115	127	7	7	65.0	71.0	5	12	5	12	12
4 FT	13	11	9	8	6	6.5	5	6	55.9	33.0	33.0	33.0	6	12	87.0	115.0	6	12	42.0	45.0	6	8	6	6	54.0	103	115	127	7	6	64.0	71.0	5	12	5	12	12
6 FT	13	12	10	8	6	7	5	6	51.4	33.0	33.0	33.0	7	15	75.0	91.0	7	15	42.0	45.0	6	7	6	6.5	51.4	104	116	128	7	6	62.0	70.0	5	12	5	12	12
8 FT	14	14	10	8	6	7	5	6	47.3	34.0	34.0	34.0	7	15	70.0	81.0	7	15	41.0	43.0	6	7.5	5	6.5	44.5	106	118	130	7	6	61.0	71.0	5	12	5	12	0
10 FT	15	16	10	8	6	6.5	6	8	53.6	35.0	35.0	35.0	7	14	75.0	85.0	7	14	48.0	51.0	6	7	5	7	41.6	108	120	132	7	6.5	60.0	72.0	5	12	5	12	0
12 FT	16	17	10	8	6	6.5	6	8	51.3	36.0	36.0	36.0	7	13	73.0	83.0	7	13	47.0	50.0	6	6.5	5	6.5	40.1	109	121	133	7	6	60.0	72.0	5	12	5	12	0
14 FT	18	19	10	8	6	6	6	8	49.0	38.0	38.0	38.0	7	14	71.0	83.0	7	14	47.0	50.0	6	6	5	6.5	38.8	111	123	135	7	6.5	59.0	73.0	5	12	5	12	0
16 FT	19	20	10	8	6	6	6	7.5	47.6	39.0	39.0	39.0	7	13	69.0	82.0	7	13	46.0	50.0	6	6	5	6.5	37.8	112	124	136	7	6	59.0	73.0	5	12	5	11	0
18 FT	20	22	10	8	7	7	6	7.5	46.9	40.0	40.0	40.0	7	13	69.0	81.0	7	13	46.0	50.0	7	7.5	5	6.5	36.8	114	126	138	7	6.5	59.0	73.0	5	12	5	9.5	0
20 FT	22	23	10	8	7	7.5	6	7.5	45.6	42.0	42.0	42.0	7	13	68.0	81.0	7	13	46.0	50.0	7	6.5	5	6	36.5	115	127	139	7	6	59.0	73.0	5	12	5	8	0
22 FT	24	25	10	8	7	7.5	6	7.5	45.0	44.0	44.0	44.0	7	13	67.0	81.0	7	13	46.0	50.0	7	6.5	5	6	36.3	117	129	141	7	6.5	59.0	73.0	5	12	5	8	0
24 FT	25	27	11	8	7	7	6	7.5	45.9	45.0	45.0	45.0	7	12	67.0	80.0	7	12	46.0	50.0	7	6.5	5	6	36.4	119	131	143	7	6	59.0	73.0	5	12	5	7.5	0
26 FT	27	28	11	8	7	6.5	6	7.5	45.1	47.0	47.0	47.0	7	12	66.0	80.0	7	12	45.0	50.0	7	6	5	6	36.4	120	132	144	7	6	59.0	73.0	5	12	5	7.5	0
28 FT	28	30	11	8	7	6	6	7	45.0	52.0	52.0	52.0	7	12	66.0	80.0	7	12	45.0	50.0	8	7.5	6	7	39.0	122	134	146	8	7.5	65.0	79.0	5	12	5	7.5	0
30 FT	30	31	11	8	7	6	6	6.5	44.6	54.0	54.0	54.0	7	12	66.0	79.0	7	12	44.0	48.0	8	7	6	7	39.0	123	135	147	8	7	65.0	79.0	5	12	5	7.5	0
32 FT	31	33	12	8	8	7.5	6	7.5	45.5	55.0	55.0	55.0	8	15	74.0	87.0	8	15	52.0	56.0	8	7	6	7	39.4	125	137	149	8	6.5	65.0	80.0	5	12	5	7	0
34 FT	33	34	12	8	8	7	6	7	45.3	57.0	57.0	57.0	8	14	73.0	86.0	8	14	51.0	54.0	8	6.5	6	7	39.5	126	138	150	8	6.5	65.0	80.0	5	12	5	7	0
36 FT	34	36	12	8	8	7	6	6.5	45.3	58.0	58.0	58.0	8	14	73.0	85.0	8	14	50.0	53.0	8	6.5	6	6.5	39.4	128	140	152	8	6	65.0	80.0	5	12	5	6.5	0
38 FT	35	37	12	8	8	6.5	6	6.5	45.3	59.0	59.0	59.0	8	13	73.0	85.0	8	13	50.0	53.0	8	6.5	6	6.5	39.4	129	141	153	8	6	65.0	80.0	5	12	5	6	0
40 FT	36	39	13	8	8	6	6	6.5	46.1	60.0	60.0	60.0	8	12	73.0	84.0	8	12	50.0	52.0	8	6.5	6	6	39.9	131	143	155	8	6	65.0	80.0	5	12	5	6.5	0
42 FT	38	40	13	8	8	6	6	6	46.0	62.0	62.0	62.0	8	12	72.0	83.0	8	12	48.0	50.0	8	6.5	6	6	40.1	132	144	156	9	7	71.0	86.0	5	12	5	6	0
44 FT	39	41	13	8	8	6	6	6	46.0	63.0	63.0	63.0	8	12	72.0	82.0	8	12	48.0	49.0	8	6	7	7	43.3	133	145	157	9	7	71.0	86.0	5	12	6	8	0
46 FT	40	42	13	8	8	6	7	7	51.1	70.0	70.0	70.0	8	12	72.0	82.0	8	12	47.0	48.0	8	6	7	7	43.4	134	146	158	9	7	71.0	86.0	5	12	6	7.5	0
48 FT	41	43	13	8	9	7.5	7	7	51.1	71.0	71.0	71.0	9	15	79.0	89.0	9	15	55.0	56.0	8	6	7	6.5	43.5	135	147	159	9	7	70.0	86.0	5	12	6	7.5	0
50 FT	42	45	13	8	9	7	7	6	51.4	72.0	72.0	72.0	9	15	79.0	88.0	9	15	55.0	56.0	8	6	7	6.5	43.8	137	149	161	9	7	70.0	86.0	5	10.5	6	7	0

SPAN (S) = 16 FT HEIGHT (HT) = 11 FT OR 12 FT OR 13 FT

DESIGN FILL	MEMBER THICKNESS				TOP SLAB BARS														BOTTOM SLAB BARS														WALL BARS				
					A1 BARS		J3 BARS					H1 BARS				H2 BARS				A2 BARS		J4 BARS						H3 BARS				B1 BARS		B2 BARS		
	TS	BS	TX	TI	SIZE	SPA.	SIZE	SPA.	C1	K2 HT=11′	K2 HT=12′	K2 HT=13′	SIZE	SPA.	C5	Q8	SIZE	SPA.	C6	Q9	SIZE	SPA.	SIZE	SPA.	C4	K3 HT=11′	K3 HT=12′	K3 HT=13′	SIZE	SPA.	C7	Q10	SIZE	SPA.	SIZE	SPA.	G1
1 FT	15	11	9	10	6	7.5	5	6	77.5	35.0	35.0	35.0	6	16	155.5	118.5	6	16	52.0	57.0	5	6.5	6	6	87.6	139	151	163	6	6	65.0	69.0	5	12	5	8.5	12
2 FT	16	12	9	10	6	7	5	6	77.5	36.0	36.0	36.0	6	14	155.5	118.5	6	14	49.0	54.0	5	6	6	6	79.0	140	152	164	6	6	64.0	69.0	5	12	5	8.5	12
4 FT	13	12	10	10	6	6.5	6	7	76.3	37.0	37.0	37.0	6	12	91.0	115.0	6	12	42.0	45.0	5	6	6	6	69.6	140	152	164	7	6.5	65.0	72.0	5	10.5	5	8	12
6 FT	13	13	10	10	6	6.5	6	7	67.3	37.0	37.0	37.0	7	15	77.0	88.0	7	15	43.0	45.0	6	7.5	6	6.5	64.3	141	153	165	7	6	64.0	72.0	5	12	5	8	12
8 FT	14	14	10	10	6	7	6	6.5	61.5	38.0	38.0	38.0	7	15	71.0	79.0	7	15	41.0	44.0	6	7	6	6	60.3	142	154	166	7	6	62.0	72.0	5	12	5	8	0
10 FT	15	16	10	10	6	6.5	6	6	63.9	35.0	39.0	39.0	7	14	76.0	85.0	7	14	49.0	51.0	6	6.5	6	6	57.6	144	156	168	7	6.5	61.0	72.0	5	12	5	8	0
12 FT	16	18	11	10	6	6.5	6	6	62.9	36.0	40.0	40.0	7	14	74.0	83.0	7	14	48.0	51.0	6	6.5	6	7	56.4	146	158	170	7	6.5	61.0	73.0	5	12	5	7.5	0
14 FT	18	19	12	10	6	6.5	6	6.5	61.8	38.0	42.0	42.0	7	14	72.0	82.0	7	14	48.0	51.0	6	6	6	7	55.8	147	159	171	7	6.5	61.0	73.0	5	12	5	7	0
16 FT	19	21	12	10	6	6	6	6	60.8	39.0	43.0	43.0	7	13	71.0	81.0	7	13	47.0	51.0	7	8	6	7	54.6	149	161	173	7	6.5	60.0	73.0	5	12	5	7	0
18 FT	20	22	12	10	7	8	7	8	64.6	40.0	44.0	44.0	7	13	70.0	81.0	7	13	47.0	51.0	7	7.5	6	6	53.8	150	162	174	7	6.5	60.0	73.0	5	12	5	7	0
20 FT	22	24	13	10	7	8	6	6	59.6	42.0	46.0	46.0	7	13	69.0	81.0	7	13	47.0	51.0	7	7	6	7	53.6	152	164	176	7	6.5	60.0	73.0	5	12	5	6.5	0
22 FT	23	25	14	10	7	7	6	6	59.8	43.0	47.0	47.0	7	12	69.0	80.0	7	12	47.0	50.0	7	6.5	6	7	53.5	153	165	177	7	6.5	60.0	73.0	5	12	5	6.5	0
24 FT	25	27	14	10	7	7	6	6	59.1	45.0	49.0	49.0	7	13	68.0	80.0	7	13	46.0	50.0	7	6.5	6	7	53.3	155	167	179	7	6	60.0	74.0	5	12	5	6	0
26 FT	27	29	14	10	7	6.5	6	6	58.6	51.0	51.0	51.0	7	13	67.0	80.0	7	13	46.0	50.0	7	6	6	7	53.0	157	169	181	8	7.5	66.0	80.0	5	12	5	6	0
28 FT	28	30	15	10	7	6.5	6	6	59.1	52.0	52.0	52.0	7	12	67.0	79.0	7	12	46.0	50.0	8	7.5	6	7	53.1	158	170	182	8	7.5	66.0	80.0	5	12	6	8	0
30 FT	30	32	15	10	7	6	6	6	58.8	54.0	54.0	54.0	7	12	67.0	79.0	7	12	45.0	48.0	8	7	6	7	53.0	160	172	184	8	7	66.0	80.0	5	12	6	8	0
32 FT	31	33	15	10	8	7.5	7	7	63.4	55.0	55.0	55.0	8	15	74.0	87.0	8	15	53.0	56.0	8	7	6	7	52.8	161	173	185	8	6.5	66.0	80.0	5	12	6	8	0
34 FT	32	34	16	10	8	7	7	7.5	63.9	56.0	56.0	56.0	8	14	74.0	86.0	8	14	52.0	56.0	8	6	6	7	52.9	162	174	186	8	6	66.0	80.0	5	12	6	8	0
36 FT	34	36	16	10	8	7	7	7.5	63.8	58.0	58.0	58.0	8	14	74.0	85.0	8	14	51.0	54.0	8	6.5	6	6.5	52.9	164	176	188	8	6	66.0	80.0	5	12	6	8	0
38 FT	35	37	17	10	8	6.5	7	7.5	64.4	59.0	59.0	59.0	8	13	74.0	85.0	8	13	51.0	53.0	8	6	6	6.5	53.1	165	177	189	8	6	66.0	80.0	5	12	6	7.5	0
40 FT	36	39	17	10	8	6.5	7	7	64.4	60.0	60.0	60.0	8	13	73.0	84.0	8	13	50.0	53.0	8	6.5	6	6	53.1	167	179	191	8	6	66.0	80.0	5	12	6	7.5	0
42 FT	37	40	17	10	8	6	7	6.5	64.3	61.0	61.0	61.0	8	12	73.0	84.0	8	12	50.0	52.0	8	6	6	6	53.1	168	180	192	9	7	72.0	86.0	5	12	6	7.5	0
44 FT	38	41	18	10	8	6	7	7	65.0	62.0	62.0	68.0	8	12	73.0	83.0	8	12	49.0	51.0	8	6	7	8	56.6	169	181	193	9	7	72.0	86.0	5	12	6	7	0
46 FT	39	43	19	10	8	6	7	7.5	66.0	63.0	63.0	69.0	8	12	73.0	82.0	8	12	49.0	51.0	8	6	7	7.5	57.1	171	183	195	9	7	72.0	87.0	5	12	6	6.5	0
48 FT	40	44	19	10	8	6	7	6.5	66.0	70.0	70.0	70.0	8	12	72.0	81.0	8	12	48.0	50.0	8	6	7	7	57.3	172	184	196	9	7	72.0	87.0	5	12	6	6.5	0
50 FT	41	45	20	10	9	7.5	7	7	66.9	71.0	71.0	71.0	9	15	80.0	88.0	9	15	56.0	57.0	8	6	7	7	57.6	173	185	197	9	6.5	72.0	87.0	5	12	6	6.5	0

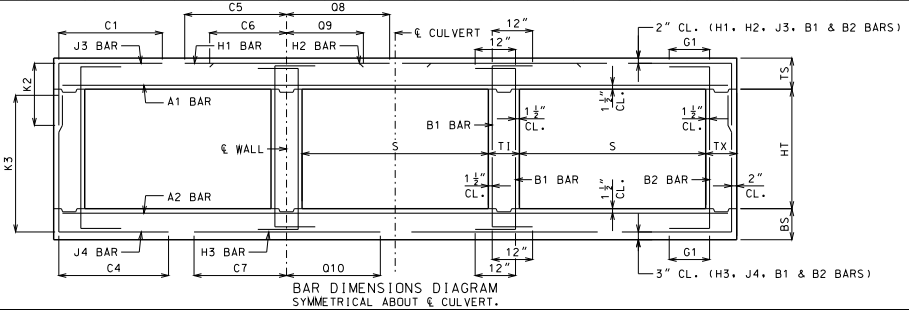

BAR DIMENSIONS DIAGRAM
SYMMETRICAL ABOUT ℄ CULVERT.

GENERAL NOTES:

IF DESIGN FILL IS BETWEEN TABULATED DESIGN FILLS, USE THE NEXT GREATER TABULATED DESIGN FILL, EXCEPT FOR DESIGN FILLS BETWEEN 2 FEET AND 4 FEET. FOR DESIGN FILLS BETWEEN 2 FEET AND 4 FEET USE THE GREATER MEMBER THICKNESS, AREA OF REINFORCEMENT AND BAR DIMENSIONS FROM THE 2 FEET AND 4 FEET TABULATED DESIGN FILLS. AREA OF REINFORCEMENT EQUALS BAR AREA PER FOOT SPACING.

SPECIAL DESIGNS ARE REQUIRED WHEN THE DESIGN FILL IS LESS THAN 1 FOOT OR GREATER THAN 50 FEET.

DIMENSIONS ARE IN INCHES UNLESS OTHERWISE SPECIFIED.

DESIGN FILLS ARE MEASURED FROM THE TOP OF TOP SLAB TO THE TOP OF EARTH FILL OR ROADWAY.

CULVERTS MEET STRENGTH AND SERVICEABILITY REQUIREMENTS FOR THE DESIGN VEHICULAR LIVE LOAD HL-93 MINUS THE LANE LOAD.

MISSOURI HIGHWAYS AND TRANSPORTATION COMMISSION
105 WEST CAPITOL
JEFFERSON CITY, MO 65102
1-888-ASK-MODOT (1-888-275-6636)

STATE OF MISSOURI — DENNIS W. HECKMAN — NUMBER PE-27141 — PROFESSIONAL ENGINEER
THIS SHEET HAS BEEN SIGNED, SEALED AND DATED ELECTRONICALLY.

CONCRETE TRIPLE BOX CULVERT

MEMBER THICKNESS
BAR SIZE, SPACING & DIMENSIONS

SPAN (S): 16 FEET
HEIGHT (HT): 8 THRU 13 FEET

DATE EFFECTIVE: 12/01/2011
DATE PREPARED: 9/29/2011

703.87

SHEET NO.
26 OF 27

IF A SEAL IS PRESENT ON THIS SHEET IT HAS BEEN ELECTRONICALLY SEALED AND DATED.

SPAN (S) = 16 FT HEIGHT (HT) = 14 FT OR 15 FT OR 16 FT

DESIGN FILL	MEMBER THICKNESS				TOP SLAB BARS														BOTTOM SLAB BARS												WALL BARS				
					A1 BARS		J3 BARS						H1 BARS				H2 BARS				A2 BARS		J4 BARS						H3 BARS				B1 BARS		B2 BARS	
	TS	BS	TX	TI	SIZE	SPA.	SIZE	SPA.	C1	K2 HT=14'	K2 HT=15'	K2 HT=16'	SIZE	SPA.	C5	Q8	SIZE	SPA.	C6	Q9	SIZE	SPA.	SIZE	SPA.	C4	K3 HT=14'	K3 HT=15'	K3 HT=16'	SIZE	SPA.	C7	Q10	SIZE	SPA.	SIZE	SPA.	G1
1 FT	15	11	12	13	6	7.5	6	8	82.9	35.0	35.0	39.0	6	16	160.5	120.5	6	16	51.0	55.0	5	6.5	6	6	97.5	175	187	199	7	7	70.0	71.0	5	10.5	5	7	12
2 FT	16	12	12	13	6	7.5	6	8	82.9	36.0	36.0	40.0	6	15	160.5	120.5	6	15	49.0	52.0	5	6	6	6	93.3	176	188	200	7	7	69.0	71.0	5	12	5	7	12
4 FT	12	13	13	13	6	6.5	6	6.5	94.8	36.0	36.0	36.0	7	16	92.0	94.0	7	16	46.0	46.0	5	6	6	6.5	87.8	177	189	201	7	7	68.0	73.0	5	8.5	5	6.5	12
6 FT	13	13	13	13	6	7	6	7	82.5	37.0	37.0	37.0	7	16	77.0	81.0	7	16	44.0	45.0	6	7.5	6	6	79.3	177	189	201	7	6	66.0	71.0	5	12	5	6.5	12
8 FT	14	15	13	13	6	7	6	6.5	77.9	38.0	38.0	38.0	7	15	73.0	77.0	7	15	43.0	44.0	6	7.5	6	6.5	77.8	179	191	203	7	6.5	64.0	72.0	5	12	5	6.5	0
10 FT	15	16	13	13	6	7	6	6	80.9	39.0	39.0	39.0	7	15	78.0	83.0	7	15	50.0	51.0	6	6.5	6	6	75.3	180	192	204	7	6	63.0	72.0	5	12	5	6.5	0
12 FT	16	18	14	13	6	6.5	6	6	78.5	40.0	40.0	40.0	7	14	76.0	82.0	7	14	49.0	51.0	6	6.5	6	6	73.8	182	194	206	7	6.5	63.0	72.0	5	12	5	6	0
14 FT	17	19	14	13	6	6	7	7.5	81.6	41.0	41.0	47.0	7	13	74.0	81.0	7	13	49.0	51.0	6	6	7	7.5	75.0	183	195	207	7	6.5	62.0	72.0	5	12	5	6	0
16 FT	19	21	15	13	6	6.5	7	7.5	80.9	43.0	43.0	49.0	7	14	73.0	81.0	7	14	49.0	51.0	7	8	7	7.5	74.0	185	197	209	7	6.5	62.0	73.0	5	12	6	8	0
18 FT	20	22	16	13	6	6	7	7.5	80.0	44.0	44.0	50.0	7	13	72.0	80.0	7	13	49.0	51.0	7	7.5	7	7.5	72.9	186	198	210	7	6.5	62.0	73.0	5	12	6	8	0
20 FT	22	24	16	13	6	6	7	7	79.1	46.0	46.0	52.0	7	13	71.0	80.0	7	13	48.0	51.0	7	7	7	7.5	72.3	188	200	212	7	6.5	62.0	73.0	5	12	6	8	0
22 FT	23	25	17	13	7	7.5	7	7	78.8	47.0	47.0	53.0	7	13	70.0	80.0	7	13	48.0	51.0	7	6	7	8	71.5	189	201	213	7	6	62.0	73.0	5	12	6	7.5	0
24 FT	25	27	17	13	7	7	7	7	78.1	49.0	49.0	55.0	7	13	70.0	80.0	7	13	48.0	51.0	7	6.5	7	7	71.3	191	203	215	7	6	61.0	73.0	5	12	6	7.5	0
26 FT	26	29	18	13	7	7	7	7	78.1	50.0	50.0	56.0	7	12	69.0	79.0	7	12	48.0	51.0	7	6	7	8	71.0	193	205	217	8	7.5	67.0	80.0	5	12	6	7	0
28 FT	28	30	19	13	7	6.5	7	7	78.3	52.0	52.0	52.0	7	12	68.0	79.0	7	12	47.0	51.0	8	7.5	6	6	67.8	194	206	218	8	7.5	67.0	80.0	5	12	6	6.5	0
30 FT	29	32	19	13	7	6	7	6.5	77.9	53.0	53.0	59.0	7	12	68.0	79.0	7	12	47.0	51.0	8	7	7	7.5	70.5	196	208	220	8	7	67.0	80.0	5	12	6	6.5	0
32 FT	31	33	20	13	8	7.5	7	6.5	78.1	55.0	55.0	61.0	8	15	76.0	87.0	8	15	53.0	57.0	8	7	7	8	70.4	197	209	221	8	6.5	67.0	80.0	5	12	6	6.5	0
34 FT	32	34	20	13	8	7.5	7	6	77.6	56.0	56.0	62.0	8	14	75.0	86.0	8	14	53.0	56.0	8	6	7	7	70.0	198	210	222	8	6	67.0	80.0	5	12	6	6.5	0
36 FT	33	36	22	13	8	7	7	6.5	78.8	57.0	63.0	63.0	8	14	75.0	86.0	8	14	53.0	56.0	8	6.5	7	7.5	70.3	200	212	224	8	6	67.0	81.0	5	12	6	6	0
38 FT	34	37	23	13	8	6.5	7	6.5	79.1	58.0	64.0	64.0	8	13	75.0	85.0	8	13	53.0	56.0	8	6	7	7.5	70.3	201	213	225	8	6	67.0	81.0	5	12	6	6	0
40 FT	36	39	23	13	8	6.5	7	6.5	79.0	60.0	66.0	66.0	8	13	75.0	85.0	8	13	51.0	54.0	8	6.5	7	7.5	70.3	203	215	227	8	6	67.0	81.0	5	12	7	7.5	0
42 FT	37	40	23	13	8	6.5	7	6	78.9	61.0	67.0	67.0	8	12	74.0	84.0	8	12	51.0	53.0	8	6	7	7	70.3	204	216	228	9	7	73.0	87.0	5	12	7	7.5	0
44 FT	38	42	24	13	8	6	7	6	79.8	68.0	68.0	68.0	8	12	74.0	83.0	8	12	50.0	52.0	8	6	7	7	70.8	206	218	230	9	7	73.0	87.0	5	12	7	7.5	0
46 FT	39	43	26	13	8	6	7	6.5	81.4	69.0	69.0	69.0	8	12	74.0	83.0	8	12	50.0	52.0	8	6	7	7	71.3	207	219	231	9	7	73.0	87.0	5	12	7	7.5	0
48 FT	40	44	27	13	8	6	7	6	82.1	70.0	70.0	70.0	8	12	74.0	82.0	8	12	49.0	51.0	8	6	7	7	71.6	208	220	232	9	7	73.0	88.0	5	12	7	8	0
50 FT	41	45	28	13	9	7.5	7	6	83.0	71.0	71.0	71.0	9	15	82.0	89.0	9	15	57.0	58.0	8	6	7	7	72.0	209	221	233	9	6.5	73.0	88.0	5	12	7	8	0

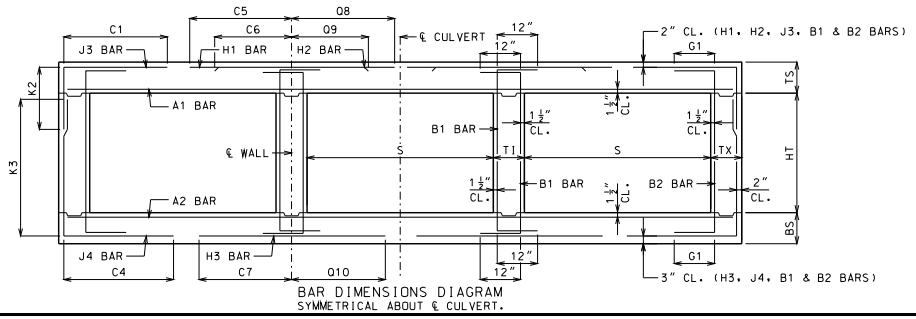

BAR DIMENSIONS DIAGRAM
SYMMETRICAL ABOUT ℄ CULVERT.

GENERAL NOTES:

IF DESIGN FILL IS BETWEEN TABULATED DESIGN FILLS, USE THE NEXT GREATER TABULATED DESIGN FILL, EXCEPT FOR DESIGN FILLS BETWEEN 2 FEET AND 4 FEET. FOR DESIGN FILLS BETWEEN 2 FEET AND 4 FEET USE THE GREATER MEMBER THICKNESS, AREA OF REINFORCEMENT AND BAR DIMENSIONS FROM THE 2 FEET AND 4 FEET TABULATED DESIGN FILLS. AREA OF REINFORCEMENT EQUALS BAR AREA PER FOOT SPACING.

SPECIAL DESIGNS ARE REQUIRED WHEN THE DESIGN FILL IS LESS THAN 1 FOOT OR GREATER THAN 50 FEET.

DIMENSIONS ARE IN INCHES UNLESS OTHERWISE SPECIFIED.

DESIGN FILLS ARE MEASURED FROM THE TOP OF TOP SLAB TO THE TOP OF EARTH FILL OR ROADWAY.

CULVERTS MEET STRENGTH AND SERVICEABILITY REQUIREMENTS FOR THE DESIGN VEHICULAR LIVE LOAD HL-93 MINUS THE LANE LOAD.

MISSOURI HIGHWAYS AND TRANSPORTATION COMMISSION
105 WEST CAPITOL
JEFFERSON CITY, MO 65102
1-888-ASK-MODOT (1-888-275-6636)

STATE OF MISSOURI
DENNIS W. HECKMANN
NUMBER PE-27141
PROFESSIONAL ENGINEER
THIS SHEET HAS BEEN SIGNED, SEALED AND DATED ELECTRONICALLY.

CONCRETE TRIPLE BOX CULVERT

MEMBER THICKNESS
BAR SIZE, SPACING & DIMENSIONS

SPAN (S): 16 FEET
HEIGHT (HT): 14 THRU 16 FEET

DATE EFFECTIVE: 12/01/2011
DATE PREPARED: 9/29/2011

703.87

SHEET NO.
27 OF 27

IF A SEAL IS PRESENT ON THIS SHEET IT HAS BEEN ELECTRONICALLY SEALED AND DATED.

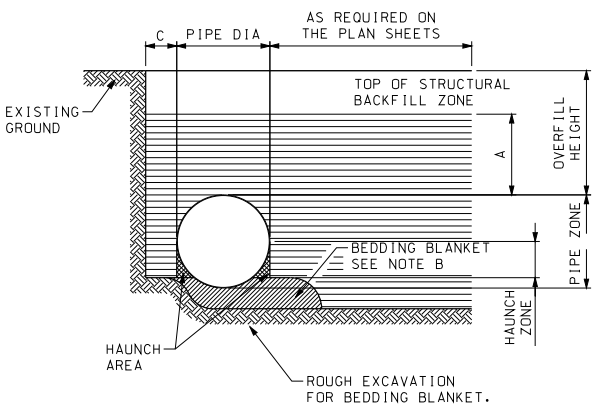

TYPICAL TRENCH DETAIL

PIPE INSTALLATION AND BEDDING

NOTE:

A) MINIMUM STRUCTURAL BACKFILL OVER TOP OF PIPE SHALL BE ONE-EIGHTH DIAMETER OR SPAN OF PIPE OR ONE FOOT WHICHEVER IS GREATER.

B) BEDDING BLANKET OF LOOSE FILL SHALL BE ROUGHLY SHAPED TO FIT BOTTOM OF PIPE. MINIMUM THICKNESS BEFORE PLACING PIPE SHALL BE AS FOLLOWS:

DEPTH OF CORRUGATION	MIN. BEDDING THICKNESS
$\frac{1}{2}$"	1"
1"	2"
2"	3"

C) TRENCH INSTALLATIONS - 2 FEET MINIMUM EACH SIDE OF CULVERT. THIS RECOMMENDED LIMIT SHOULD BE MODIFIED AS NECESSARY TO ACCOUNT FOR VARIABLES SUCH AS POOR IN-SITU SOILS. EMBANKMENT INSTALLATIONS - ONE DIAMETER OR SPAN EACH SIDE OF CULVERT.

PIPE	
DIAMETER	SPACE S
UP TO 24"	12"
24" TO 72"	$\frac{1}{2}$ PIPE DIA
72" AND OVER	36"

PIPE-ARCHES	
SPAN	SPACE X
UP TO 36"	12"
36" TO 108"	1/3 ARCH SPAN
108" TO 189"	36"

MULTIPLE STRUCTURE SPACING

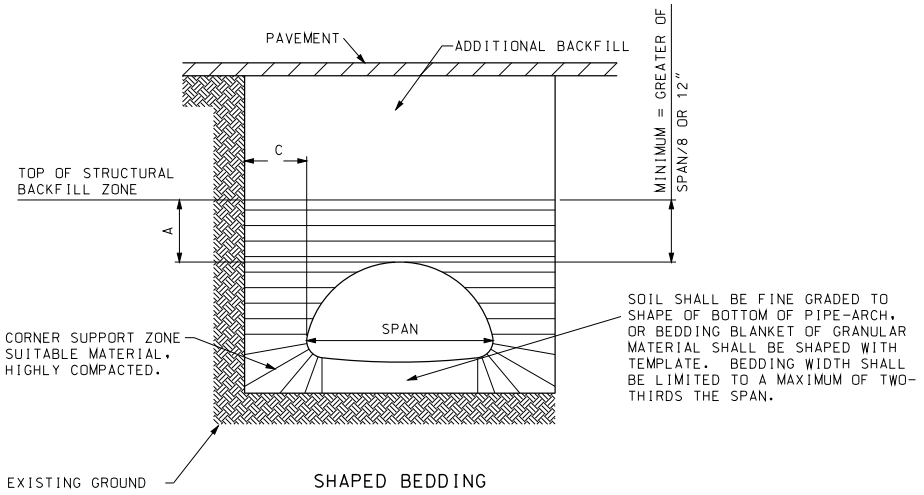

SHAPED BEDDING

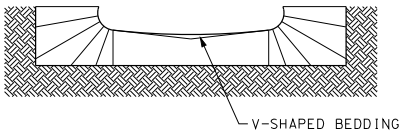

ALTERNATIVE-SHAPED BEDDING

PIPE-ARCH TRENCH DETAIL

BEDDING AND CORNER ZONE TREATMENT FOR PIPE ARCH STRUCTURES

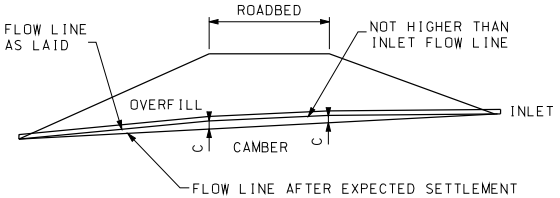

TYPICAL CAMBERED FLOW LINE

NOTE:

ON YIELDING SOIL, PIPE CULVERTS SHALL BE PLACED ON A CAMBERED FLOW LINE. THE AMOUNT OF CAMBER WILL VARY WITH SOIL CONDITIONS AND WILL BE SPECIFIED ON THE DESIGN PLANS.

MISSOURI HIGHWAYS AND TRANSPORTATION COMMISSION
105 WEST CAPITOL
JEFFERSON CITY, MO 65102
1-888-ASK-MODOT (1-888-275-6636)

STATE OF MISSOURI
KATHRYN PHILLIPS HARVEY
NUMBER PE-23751
PROFESSIONAL ENGINEER
THIS SHEET HAS BEEN SIGNED, SEALED AND DATED ELECTRONICALLY.

CORRUGATED METAL PIPE INSTALLATION METHODS

DATE EFFECTIVE: 04/01/2011
DATE PREPARED: 3/10/2011

725.00C

SHEET NO. 1 OF 5

IF A SEAL IS PRESENT ON THIS SHEET IT HAS BEEN ELECTRONICALLY SEALED AND DATED.

CORRUGATED METALIC-COATED STEEL CIRCULAR PIPE LOCK SEAM

MAXIMUM ALLOWABLE OVERFILL HEIGHTS (1)

SPECIFIED DIAMETER OF PIPE	MINIMUM COVER		SPECIFIED THICKNEWW OF COATED SHEET (IN.)																			
	CORRUGATED	SPIRAL RIB	0.064				0.079				0.109				0.138				0.168			
			A	B	C	D	A	B	C	D	A	B	C	D	A	B	C	D	A	B	C	D
IN.	FT.	FT.	FT.	FT.	FT.	FT.	FT.	FT.	FT.	FT.	FT.	FT.	FT.	FT.	FT.	FT.	FT.	FT.	FT.	FT.	FT.	FT.
12	1	1	219	251	224	144	273	314	280	201	382	440	392	334	492	566	504	484	602	693	617	
15	1	1	175	201	179	115	218	251	224	161	306	352	314	267	394	453	403	387	481	555	493	
18	1	1	146	167	149	96	182	209	187	134	255	293	261	223	328	378	336	323	401	462	411	
21	1	1	125	143	128	82	156	179	160	115	219	251	224	191	281	324	288	277	344	396	352	
24	1	1	109	126	112	72	137	157	140	100	191	220	196	167	246	283	252	242	301	347	308	
30	1	1	87	100	90	57	109	126	112	80	153	176	157	134	197	227	202	194	241	277	247	
36	1	1	73	84	75	48	91	105	93	67	127	147	131	111	164	189	168	161	201	231	206	
42	1	1	62	72	64	41	78	90	80	57	109	126	112	95	141	162	144	138	172	198	176	
48	1	1	55	63	56	36	68	78	70	50	96	110	98	83	123	142	126	121	150	173	154	
54	1	2		56	50	32✳	61	70	62	45	85	98	87	74	109	126	112	108	134	154	137	
60	1	2		50	45			63	56	40	76	88	78	67	98	113	101	97	120	139	123	
66	1	2		46	41			57	51	37✳		80	71	61	89	103	92	88	109	126	112	
72	1	2		42	37			52	47			73	65	56	82	94	84	81	100	116	103	
78	1	2		39	34			48	43			68	60	51		87	78	75	89	107	95	
84	1	2		36	32			45	40			63	56	48✳		81	72	69	77	99	88	
90	1	2		33	30			42	37			59	52			76	67	65		92	82	
96	1	2						39	35			55	49			71	63	60✳		87	77	
102	2	3						37	33			52	46			67	59	53✳		82	73	
108	2	3										49	44			63	56			77	69	
114	2	3										46	41			60	53			73	65	
120	2	3										44	39			57	50			69	62	
126	2	3														54	48			66	59	

✳ FOR TRENCH INSTALLATION ONLY

CORRUGATED METALIC-COATED STEEL CIRCULAR PIPE RIVETED SEAM

MAXIMUM ALLOWABLE OVERFILL HEIGHTS (1)

SPECIFIED DIAMETER OF PIPE	MINIMUM COVER		SPECIFIED THICKNEWW OF COATED SHEET (IN.)																			
			0.064				0.079				0.109				0.138				0.168			
	CORRUGATED	SPIRAL RIB	SINGLE RIVET		DOUBLE RIVET		SINGLE RIVET		DOUBLE RIVET		SINGLE RIVET		DOUBLE RIVET		SINGLE RIVET		DOUBLE RIVET		SINGLE RIVET		DOUBLE RIVET	
			A	B	A	B	A	B	A	B	A	B	A	B	A	B	A	B	A	B	A	B
IN.	FT.	FT.	FT.	FT.	FT.	FT.	FT.	FT.	FT.	FT.	FT.	FT.	FT.	FT.	FT.	FT.	FT.	FT.	FT.	FT.	FT.	FT.
12	1	1	143		185	245	156		255	305	200		382	440	209		419	544	219		438	604
15	1	1	114		148	196	124		204	244	160		306	352	168		335	436	175		351	483
18	1	1	95		123	164	104		170	203	133		255	293	140		279	363	146		292	403
21	1	1	82		105	140	89		146	174	114		219	251	120		239	311	125		251	345
24	1	1	71		92	123	78		127	153	100		191	220	105		209	272	109		219	302
30	1	1	57		74	98	62		102	122	80		153	176	84		168	218	88		175	242
36	1	1	48		62	82	52		85	102	67		127	147	70		140	181	73		146	201
42	1	1	41		53	70	44		73	87	57		109	126	60		120	156	63		125	173
48	1	1	36		46	61	39		64	76	50		96	110	52		105	136	55		110	151
54	1	2				55	35		57	68	44		85	98	47		93	121	49		97	134
60	1	2				49				61	40		76	88	42		84	109	44		88	121
66	1	2				45				55				80	38		76	99	40		80	110
72	1	2				41				51				73	35		70	91	36		73	101
78	1	2				38				47				68				84	34		67	93
84	1	2				35				44				63				78	31		63	86
90	1	2				33				41				59				73				81
96	1	2								38				55				68				76
102	2	3								36				52				64				71
108	2	3												49				60				67
114	2	3												46				57				64
120	2	3												44				54				60
126	2	3																52				58

A = 2-2/3" X 1/2" CORRUGATIONS.
B = 3" X 1" CORRUGATIONS.
C = 5" X 1" CORRAGATIONS
D = 3/4" X 3/4" X 7-1/2" SPIRAL RIB

(1) MAXIMUM OVERFILL MEASURED FROM THE TOP OF PIPE TO SURFACE.

IF A SEAL IS PRESENT ON THIS SHEET IT HAS BEEN ELECTRONICALLY SEALED AND DATED.

MISSOURI HIGHWAYS AND TRANSPORTATION COMMISSION
105 WEST CAPITOL
JEFFERSON CITY, MO 65102
1-888-ASK-MODOT (1-888-275-6636)

STATE OF MISSOURI
KATHRYN PHILLIPS HARVEY
NUMBER PE-23751
PROFESSIONAL ENGINEER
THIS SHEET HAS BEEN SIGNED, SEALED AND DATED ELECTRONICALLY.

CORRUGATED METAL PIPE INSTALLATION METHODS

DATE EFFECTIVE: 04/01/2011
DATE PREPARED: 3/9/2011

725.00C

CORRUGATED H32 ALUMINUM CIRCULAR PIPE LOCK SEAM

MAXIMUM ALLOWABLE OVERFILL HEIGHTS (1)

SPECIFIED DIAMETER OF PIPE	MINIMUM COVER		SPECIFIED THICKNEWW OF COATED SHEET (IN.)																			
			0.06				0.075				0.105				0.135				0.164			
	CORRUGATED	SPIRAL RIB	A	B	C	D	A	B	C	D	A	B	C	D	A	B	C	D	A	B	C	D
IN.	FT.	FT.	FT.	FT.	FT.	FT.	FT.	FT.	FT.	FT.	FT.	FT.	FT.	FT.	FT.	FT.	FT.	FT.	FT.	FT.	FT.	FT.
12	1	1	132	152		71	165	191		97	232	267		156	298	357		221	364	420		
15	1	1	106	122		57	132	153		78	185	213		125	239	286		176	291	336		
18	1	1	88	101		47	110	127		65	155	178		104	199	238		147	243	280		
21	1	1	76	87		41	95	109		56	132	152		89	170	204		126	208	240		
24	1	1	66	76		35	83	96		49	116	133		78	149	178		110	182	210		
30	1	2		61		28	66	76		39	93	107		62	119	143		88	146	168		
36	1	2		51		24✳	55	64		32	77	89		52	99	119		74	121	140		
42	1	2		43				55		28✳	66	76		45	85	102		63	104	120		
48	1	2		38				48			58	67		39	75	89		55	91	105		
54	1	2		34				42			51	59		35	66	79		49	81	93		
60	1	2		30				38				53		31✳	55	71		44	68	84		
66	1	2		28				35				48				65		40	56	76		
72	1	3		25				32				44				59		37✳	46	70		
78	1	3						29				41				55				65		
84	1	3										38				51				60		
90	1	3										36				48				56		
96	1	3										33				45				53		
102	2	4														42				49		
108	2	4														39				47		
114	2	4																		42		
120	2	4																		39		
126	2	4																				

✳ FOR TRENCH INSTALLATION ONLY

CORRUGATED H32 ALUMINUM CIRCULAR PIPE RIVETED SEAM

MAXIMUM ALLOWABLE OVERFILL HEIGHTS (1)

SPECIFIED DIAMETER OF PIPE	MINIMUM COVER		SPECIFIED THICKNEWW OF COATED SHEET (IN.)																			
			0.06				0.075				0.105				0.135				0.164			
	CORRUGATED	SPIRAL RIB	SINGLE RIVET		DOUBLE RIVET		SINGLE RIVET		DOUBLE RIVET		SINGLE RIVET		DOUBLE RIVET		SINGLE RIVET		DOUBLE RIVET		SINGLE RIVET		DOUBLE RIVET	
			A	B	A	B	A	B	A	B	A	B	A	B	A	B	A	B	A	B	A	B
IN.	FT.	FT.	FT.	FT.	FT.	FT.	FT.	FT.	FT.	FT.	FT.	FT.	FT.	FT.	FT.	FT.	FT.	FT.	FT.	FT.	FT.	FT.
12	1	1	77		120	141	77		154	175	133		269	239	138		282	359	144		291	466
15	1	1	62		96	113	62		123	140	107		215	191	111		226	287	115		232	373
18	1	1	51		80	94	51		103	117	89		179	160	92		188	239	96		194	311
21	1	1	44		68	81	44		88	100	76		154	137	79		161	205	82		166	266
24	1	1	38		60	71	38		77	88	67		135	120	69		141	179	72		145	233
30	1	2				56	31		62	70	53		108	96	55		113	144	57		116	186
36	1	2				47	26		51	58	44		90	80	46		94	120	48		97	155
42	1	2				40				50	38		77	68	40		81	103	41		83	133
48	1	2				35				44	33		67	60	35		71	90	36		73	116
54	1	2				31				39	30		56	53	31		63	80	32		65	104
60	1	2				28				35				48	28		56	72	29		58	93
66	1	2				26				32				44				65	26		53	85
72	1	3				24				29				40				60	24		47	78
78	1	3								27				37				55				72
84	1	3												34				51				67
90	1	3												32				48				62
96	1	3												30				45				58
102	2	4																42				55
108	2	4																40				51
114	2	4																				46
120	2	4																				41
126	2	4																				

A = 2-2/3" X 1/2" CORRUGATIONS.
B = 3" X 1" CORRUGATIONS.
C = 5" X 1" CORRAGATIONS
D = 3/4" X 3/4" X 7-1/2" SPIRAL RIB

(1) MAXIMUM OVERFILL MEASURED FROM THE TOP OF PIPE TO SURFACE.

IF A SEAL IS PRESENT ON THIS SHEET IT HAS BEEN ELECTRONICALLY SEALED AND DATED.

MISSOURI HIGHWAYS AND TRANSPORTATION COMMISSION
105 WEST CAPITOL
JEFFERSON CITY, MO 65102
1-888-ASK-MODOT (1-888-275-6636)

STATE OF MISSOURI
KATHRYN PHILLIPS HARVEY
NUMBER PE-23751
PROFESSIONAL ENGINEER
THIS SHEET HAS BEEN SIGNED, SEALED AND DATED ELECTRONICALLY.

CORRUGATED METAL PIPE INSTALLATION METHODS

DATE EFFECTIVE: 04/01/2011
DATE PREPARED: 3/9/2011

725.00C

CORRUGATED H34 ALUMINUM CIRCULAR PIPE LOCK SEAM

MAXIMUM ALLOWABLE OVERFILL HEIGHTS (1)

SPECIFIED DIAMETER OF PIPE	MINIMUM COVER		SPECIFIED THICKNESS OF COATED SHEET (IN.)																			
			0.06				0.075				0.105				0.135				0.164			
	CORRUGATED	SPIRAL RIB	A	B	C	D	A	B	C	D	A	B	C	D	A	B	C	D	A	B	C	D
IN.	FT.	FT.	FT.	FT.	FT.	FT.	FT.	FT.	FT.	FT.	FT.	FT.	FT.	FT.	FT.	FT.	FT.	FT.	FT.	FT.	FT.	FT.
12	1	1	159	183		85	199	229		117	278	320		187	358	428		265	437	504		
15	1	1	127	146		68	159	183		93	223	256		150	286	343		212	350	403		
18	1	1	106	122		57	132	153		78	185	213		125	239	286		176	291	336		
21	1	1	91	104		49	113	131		67	159	183		107	205	245		151	250	288		
24	1	1	79	91		43	99	115		58	139	160		94	179	214		132	218	252		
30	1	2		73		34	79	92		47	111	128		75	143	171		106	175	202		
36	1	2		61		28*	66	76		39	93	107		62	119	143		88	146	168		
42	1	2		52				66		33*	79	91		54	102	122		76	125	144		
48	1	2		46				57			68	80		47	89	107		66	109	126		
54	1	2		41				51			56	71		42	73	95		59	90	112		
60	1	2		37				46				64		37*	59	86		53	73	101		
66	1	2		33				42				58				78		48	59	92		
72	1	3		30				38				53				71		42*	47	84		
78	1	3						35				49				66				78		
84	1	3										46				61				72		
90	1	3										43				57				67		
96	1	3										39				53				62		
102	2	4														48				56		
108	2	4														43				51		
114	2	4																		46		
120	2	4																		41		
126	2	4																				

* FOR TRENCH INSTALLATION ONLY

CORRUGATED H34 ALUMINUM CIRCULAR PIPE RIVETED SEAM

MAXIMUM ALLOWABLE OVERFILL HEIGHTS (1)

SPECIFIED DIAMETER OF PIPE	MINIMUM COVER		SPECIFIED THICKNESS OF COATED SHEET (IN.)																			
			0.06				0.075				0.105				0.135				0.164			
	CORRUGATED	SPIRAL RIB	SINGLE RIVET		DOUBLE RIVET		SINGLE RIVET		DOUBLE RIVET		SINGLE RIVET		DOUBLE RIVET		SINGLE RIVET		DOUBLE RIVET		SINGLE RIVET		DOUBLE RIVET	
			A	B	A	B	A	B	A	B	A	B	A	B	A	B	A	B	A	B	A	B
IN.	FT.	FT.	FT.	FT.	FT.	FT.	FT.	FT.	FT.	FT.	FT.	FT.	FT.	FT.	FT.	FT.	FT.	FT.	FT.	FT.	FT.	FT.
12	1	1	77		120	141	77		154	175	133		269	239	138		282	359	144		291	466
15	1	1	62		96	113	62		123	140	107		215	191	111		226	287	115		232	373
18	1	1	51		80	94	51		103	117	89		179	160	92		188	239	96		194	311
21	1	1	44		68	81	44		88	100	76		154	137	79		161	205	82		166	266
24	1	1	38		60	71	38		77	88	67		135	120	69		141	179	72		145	233
30	1	2				56	31		62	70	53		108	96	55		113	144	57		116	186
36	1	2				47	26		51	58	44		90	80	46		94	120	48		97	155
42	1	2				40				50	38		77	68	40		81	103	41		83	133
48	1	2				35				44	33		67	60	35		71	90	36		73	116
54	1	2				31				39	30		56	53	31		63	80	32		65	104
60	1	2				28				35				48	28		56	72	29		58	93
66	1	2				26				32				44				65	26		53	85
72	1	3				24				29				40				60	24		47	78
78	1	3								27				37				55				72
84	1	3												34				51				67
90	1	3												32				48				62
96	1	3												30				45				58
102	2	4																42				55
108	2	4																40				51
114	2	4																				46
120	2	4																				41
126	2	4																				

A = 2-2/3" X 1/2" CORRUGATIONS.
B = 3" X 1" CORRUGATIONS.
C = 5" X 1" CORRAGATIONS
D = 3/4" X 3/4" X 7-1/2" SPIRAL RIB

(1) MAXIMUM OVERFILL MEASURED FROM THE TOP OF PIPE TO SURFACE.

IF A SEAL IS PRESENT ON THIS SHEET IT HAS BEEN ELECTRONICALLY SEALED AND DATED.

MISSOURI HIGHWAYS AND TRANSPORTATION COMMISSION
105 WEST CAPITOL
JEFFERSON CITY, MO 65102
1-888-ASK-MODOT (1-888-275-6636)

STATE OF MISSOURI
KATHRYN PHILLIPS HARVEY
NUMBER PE-23751
PROFESSIONAL ENGINEER
THIS SHEET HAS BEEN SIGNED, SEALED AND DATED ELECTRONICALLY.

CORRUGATED METAL PIPE INSTALLATION METHODS

DATE EFFECTIVE: 04/01/2011
DATE PREPARED: 4/1/2013

725.00C

MINIMUM COVER FOR CONSTRUCTION LOADS (ROUND AND PIPE-ARCH)

DIAMETER OR PIPE SPAN	MINIMUM COVER (FT.) FOR INDICATED AXLE LOADS (2)			
	18K LBS.-50K LBS.	50K LBS.-75K LBS.	75K LBS.-110K LBS.	110K LBS.-150K LBS.
IN.	FT.	FT.	FT.	FT.
12-42	2.0	2.5	3.0	3.0
48-72	3.0	3.0	3.5	4.0
78-120	3.0	3.5	4.0	4.0
126-144	3.5	4.0	4.5	4.5

THE CONTRACTOR SHALL PROVIDE MINIMUM COVER PLUS ANY ADDITIONAL COVER REQUIRED TO AVOID DAMAGE TO THE PIPE. IN UNPAVED SITUATIONS, THE SURFACE MUST BE MAINTAINED TO A LEVEL AND NON-RUTTED CONDITION.

PIPE-ARCH REQUIREMENTS 2-2/3" X 1/2" CORRUGATIONS

TYPE	SPAN (3)	RISE (3)	GALVANIZED SHEET THICKNESS - GAUGE
	(IN.)	(IN.)	(IN.)
B1	17	13	0.064 - 16
B2	21	15	0.064 - 16
B3	24	18	0.064 - 16
B4	28	20	0.064 - 16
B5	35	24	0.064 - 16
B6	42	29	0.079 - 14
B7	49	33	0.109 - 12
B8	57	38	0.109 - 12
B9	64	43	0.109 - 12
B10	71	47	0.138 - 10
B11	77	52	0.168 - 8
B12	83	57	0.168 - 8

PIPE-ARCH REQUIREMENTS 3" X 1" AND 5" X 1" CORRUGATIONS

TYPE	SPAN (4)	RISE (4)	GALVANIZED SHEET THICKNESS - GAUGE	GALVANIZED SHEET THICKNESS - GAUGE	MINIMUM COVER (2)
	(IN.)	(IN.)	(IN.)	(IN.)	(IN.)
B8A	53 (-2.4)	41 (+2.4)	0.079 - 14	0.109 - 12	12
B9A	60 (-2.7)	46 (+2.7)	0.079 - 14	0.109 - 12	15
B10A	66 (-3.0)	51 (+3.0)	0.079 - 14	0.109 - 12	15
B11A	73 (-3.3)	55 (+3.3)	0.079 - 14	0.109 - 12	18
B12A	81 (-3.6)	59 (+3.6)	0.079 - 14	0.109 - 12	18
B13A	87 (-4.4)	63 (+4.4)	0.079 - 14	0.109 - 12	18
B14A	95 (-4.8)	67 (+4.8)	0.079 - 14	0.109 - 12	18
B15A	103 (-5.2)	71 (+5.2)	0.079 - 14	0.109 - 12	18
B16A	112 (-5.6)	75 (+5.6)	0.109 - 12	0.109 - 12	21
B17A	117 (-5.9)	79 (+5.9)	0.109 - 12	0.109 - 12	21
B18A	128 (-6.4)	83 (+6.4)	0.109 - 12	0.109 - 12	24
B19A	137 (-6.9)	87 (+6.9)	0.109 - 12	0.109 - 12	24
B20A	142 (-7.1)	91 (+7.1)	0.138 - 10	0.138 - 10	24

(2) MINIMUM COVER MEASURED FROM TOP OF PIPE TO BOTTOM OF FLEXIBLE PAVEMENT OR TOP OF RIGID PAVEMENT.

(3) A TOLERANCE OF PLUS OR MINUS ONE INCH OR 2 PERCENT OF EQUIVALENT CIRCULAR DIAMETER, WHICHEVER IS GREATER, WILL BE PERMISSIBLE IN SPAN AND RISE.

(4) TOLERANCES IN PARENTHESES. NO TOLERANCE IN OPPOSITE DIRECTION.

IF A SEAL IS PRESENT ON THIS SHEET IT HAS BEEN ELECTRONICALLY SEALED AND DATED.

MISSOURI HIGHWAYS AND TRANSPORTATION COMMISSION
105 WEST CAPITOL
JEFFERSON CITY, MO 65102
1-888-ASK-MODOT (1-888-275-6636)

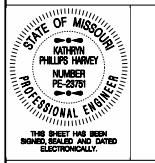

CORRUGATED METAL PIPE INSTALLATION METHODS

DATE EFFECTIVE: 04/01/2011
DATE PREPARED: 3/9/2011

725.00C

SHEET NO. 5 OF 5

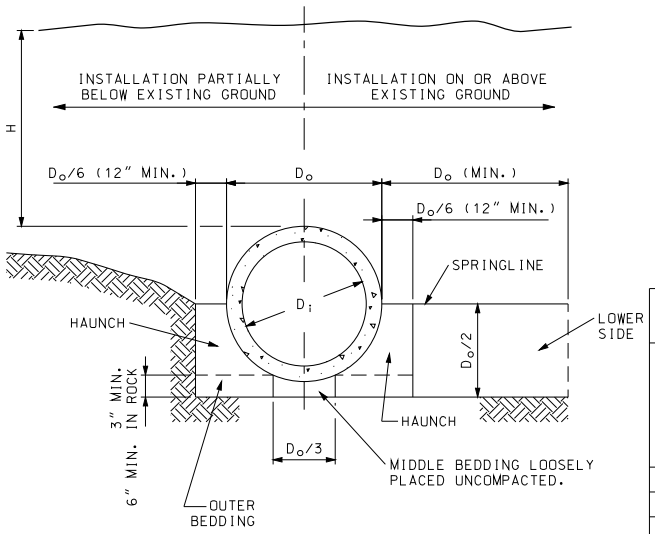

EMBANKMENT INSTALLATIONS

CONSTRUCTION SEQUENCE
1. PLACE BEDDING MATERIAL TO GRADE. DO NOT COMPACT.
2. INSTALL PIPE TO GRADE.
3. COMPACT BEDDING OUTSIDE THE MIDDLE THIRD OF THE PIPE.
4. PLACE AND COMPACT THE HAUNCH AREA UP TO THE SPRINGLINE.
5. COMPLETE BACKFILL ACCORDING TO SPECIFICATIONS.

MAXIMUM DIAMETER AND MAXIUM FILL HEIGHT

INSTALLATION TYPE	CLASS OF PIPE				
	CLASS I	CLASS II	CLASS III	CLASS IV	CLASS V
	MAXIMUM DIAMETER (INCHES)				
	108	108	108	84	72
	MAXIMUM FILL HEIGHT IN (FEET)				
TYPE 1	12	15	21	33	51
TYPE 2	9	12	17	26	39
TYPE 3	7	9	13	20	30
TYPE 4	4	6	9	13	20

IF FILL HEIGHT EXCEEDS 51 FEET AND PIPE DIAMETER IS 36 INCHES OR LESS A SPECIAL PIPE DESIGN AND INSTALLATION PROCEDURE SHALL BE REQUIRED. IF FILL HEIGHT EXCEEDS 51 FEET AND PIPE DIAMETER IS GREATER THAN 36 INCHES A SPECIAL DESIGN PIPE IS NOT ALLOWED.

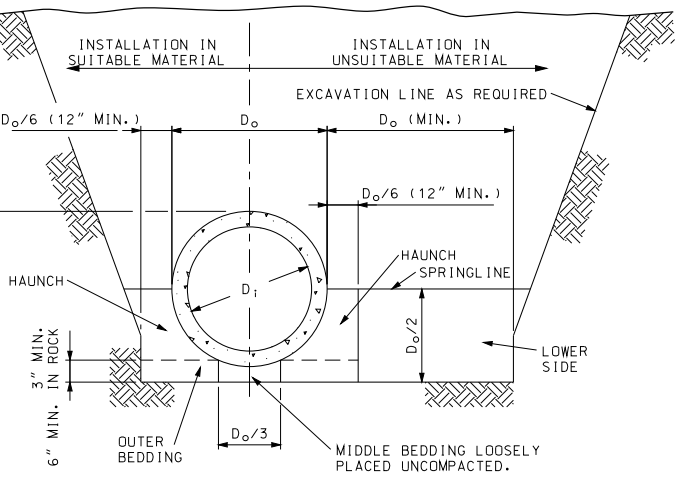

TRENCH INSTALLATION

- LEGEND -

D_i = NORMAL INSIDE DIAMETER OF PIPE.
D_o = OUTSIDE DIAMETER OF PIPE.
H = FILL COVER HEIGHT OVER PIPE (FEET)
MIN. = MINIMUM
= UNDISTURBED SOIL

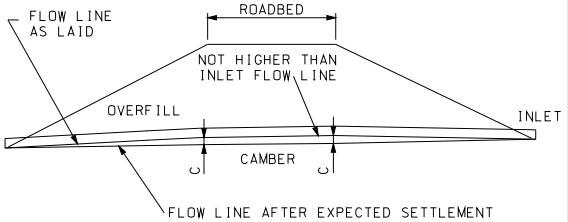

NOTE:
ON YIELDING SOIL, PIPE CULVERTS SHALL BE PLACED ON A CAMBERED FLOW LINE. THE AMOUNT OF CAMBER WILL VARY WITH SOIL CONDITION AND SHALL BE SPECIFIED ON THE DESIGN PLANS.

TYPICAL CAMBERED FLOW LINE

BEDDING AND COMPACTION REQUIREMENTS

INSTALLATION TYPE	BEDDING THICKNESS	COMPACTION REQUIREMENTS (MIN. STANDARD PROCTOR %)					
		HAUNCH AND OUTER BEDDING			LOWER SIDE BEDDING		
		CATEGORY 1 SOIL (A)	CATEGORY 2 SOIL (B)	CATEGORY 3 SOIL (C)	CATEGORY 1 SOIL (A)	CATEGORY 2 SOIL (B)	CATEGORY 3 SOIL (C)
1	D_o/24 MINIMUM, NOT LESS THAN 3". IF ROCK FOUNDATION, USE D_o/12 MIMIMUM, NOT LESS THAN 6".	95	N/A	N/A	90	95	100
2	D_o/24 MINIMUM, NOT LESS THAN 3". IF ROCK FOUNDATION, USE D_o/12 MIMIMUM, NOT LESS THAN 6".	90	95	N/A	85	90	95
3	D_o/24 MINIMUM, NOT LESS THAN 3". IF ROCK FOUNDATION, USE D_o/12 MIMIMUM, NOT LESS THAN 6".	85	90	95	85	90	95
4	D_o/24 MINIMUM, NOT LESS THAN 3". IF ROCK FOUNDATION, USE D_o/12 MIMIMUM, NOT LESS THAN 6".	NO COMPACTION REQUIRED	NO COMPACTION REQUIRED	85	NO COMPACTION REQUIRED	NO COMPACTION REQUIRED	85

(A) GRAVELLY SAND
(B) SANDY-SILT
(C) SILTY CLAY

GENERAL NOTES:

MULTIPLE PIPE CULVERTS SHALL BE INSTALLED WITH A MINIMUM CLEARANCE BETWEEN PIPES OF $\frac{1}{2}$ D_o OR 12", WHICHEVER IS GREATER, BUT NOT TO EXCEED 36".

CLASS I AND CLASS II REINFORCED CONCRETE PIPE SHALL ONLY BE USED FOR SEWERS IN TRENCHES OUTSIDE ROADBED AND STREET LIMITS.

MISSOURI HIGHWAYS AND TRANSPORTATION COMMISSION
105 WEST CAPITOL
JEFFERSON CITY, MO 65102
1-888-ASK-MODOT (1-888-275-6636)

STATE OF MISSOURI
KATHRYN PHILLIPS HARVEY
NUMBER PE-23751
PROFESSIONAL ENGINEER
THIS SHEET HAS BEEN SIGNED, SEALED AND DATED ELECTRONICALLY.

RIGID CULVERT INSTALLATION METHODS
REINFORCED CONCRETE PIPE CULVERTS

DATE EFFECTIVE: 02/01/2012
DATE PREPARED: 12/19/2011

726.30H

SHEET NO. 1 OF 2

IF A SEAL IS PRESENT ON THIS SHEET IT HAS BEEN ELECTRONICALLY SEALED AND DATED.

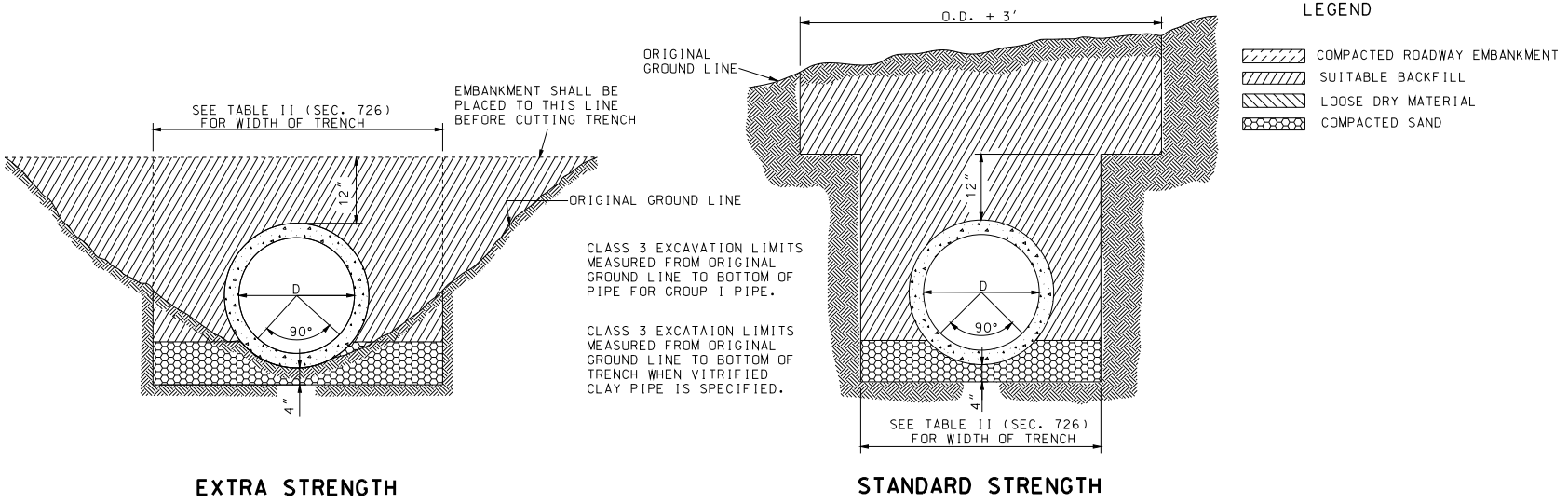

EXTRA STRENGTH

STANDARD STRENGTH

HEIGHT OF FILL OVER V.C. PIPE CULVERTS						
	STANDARD STRENGTH			EXTRA STRENGTH		
NOMINAL PIPE DIAMETER (INCH)	TRENCH WIDTH AT ONE FOOT ABOVE TOP OF PIPE (FEET)	MINIMUM FILL HEIGHT (FEET)	MAXIMUM FILL HEIGHT (FEET)	TRENCH WIDTH AT ONE FOOT ABOVE TOP OF PIPE (FEET)	MINIMUM FILL HEIGHT (FEET)	MAXIMUM FILL HEIGHT (FEET)
6	2.0	1.0	9.0			
8	2.0	1.0	7.0	2.5	4.0	12.0
10	2.5	1.0	7.0	2.5	4.0	12.0
12	2.7	1.0	6.0	3.0	4.0	13.0
15	3.5	1.0	6.0	3.0	4.0	17.0
18	3.5	1.0	6.0	3.5	4.0	17.0
21	4.0	1.0	6.0	4.0	4.0	17.0
24	4.0	1.0	8.0	4.0	3.0	19.0
30	4.5	1.0	10.0	4.5	3.0	19.0
36	5.0	1.0	11.0	5.0	3.0	19.0

MISSOURI HIGHWAYS AND TRANSPORTATION COMMISSION
105 WEST CAPITOL
JEFFERSON CITY, MO 65102
1-888-ASK-MODOT (1-888-275-6636)

STATE OF MISSOURI
KATHRYN PHILLIPS HARVEY
NUMBER PE-23751
PROFESSIONAL ENGINEER
THIS SHEET HAS BEEN SIGNED, SEALED AND DATED ELECTRONICALLY.

RIGID CULVERT INSTALLATION METHODS

VITRIFIED CLAY PIPE CULVERTS

DATE EFFECTIVE: 02/01/2012
DATE PREPARED: 12/19/2011

726.30H

SHEET NO. 2 OF 2

IF A SEAL IS PRESENT ON THIS SHEET IT HAS BEEN ELECTRONICALLY SEALED AND DATED.

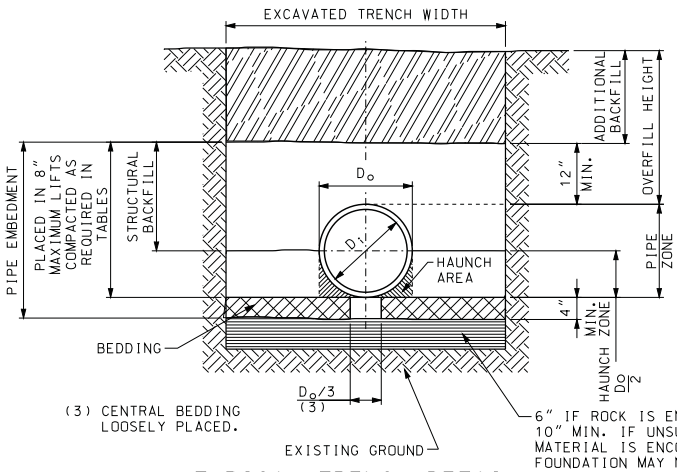

TYPICAL TRENCH DETAIL

PIPE SIZE	S (IN.)	X (IN.)
12	12	9
15	12	9
18	12	9
24	12	10
30	15	16
36	18	18
42	21	18
48	24	18

CONSTRUCTION SEQUENCE

1. PLACE BEDDING MATERIAL TO GRADE AS REQUIRED IN TABLES.
2. COMPACT BEDDING OUTSIDE THE MIDDLE THIRD OF THE PIPE.
3. INSTALL PIPE TO GRADE.
4. PLACE AND COMPACT THE HAUNCH AREA UP TO THE SPRINGLINE.
5. COMPLETE BACKFILL ACCORDING TO SPECIFICATIONS.

LEGEND

D_i = NORMAL INSIDE DIAMETER OF PIPE.
D_o = OUTSIDE DIAMETER OF PIPE.
H = FILL COVER HEIGHT OVER PIPE (FEET).
MIN. = MINIMUM
MAX. = MAXIMUM

= UNDISTURBED SOIL

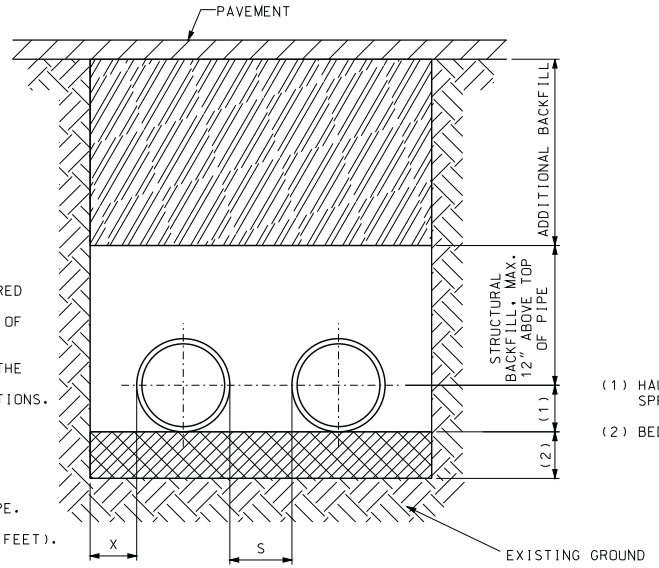

PARALLEL PIPE INSTALLATION

TYPICAL TRENCH CROSS-SECTION

(FOR PIPE INSTALLATION DETAILS, SEE TYPICAL TRENCH DETAILS.)

FILL LIMITS FOR THERMOPLASTIC PIPE

GRAVELLY SAND STRUCTURAL BACKFILL (Sn TYPES A1 & A3)

SPECIFIED DIA OF PIPE (IN.)	TRENCH WIDTH (IN.)	PE				SRPE				PVC				PP			
		COMPACTION 90% S.P.D.		COMPACTION 95% S.P.D.		COMPACTION 90% S.P.D.		COMPACTION 95% S.P.D.		COMPACTION 90% S.P.D.		COMPACTION 95% S.P.D.		COMPACTION 90% S.P.D.		COMPACTION 95% S.P.D.	
		MIN.	MAX.	MIN.	MAX.	MIN.	MAX.	MIN.	MAX.	MIN.	MAX.	MIN.	MAX.	MIN.	MAX.	MIN.	MAX.
12	34	2	19	2	26	--	--	--	--	2	32	2	52	2	20	2	27
15	39	2	20	2	28	--	--	--	--	2	32	2	47	2	21	2	29
18	44	2	17	2	24	--	--	--	--	2	33	2	51	2	18	2	25
24	55	2	14	2	20	2	50	--	--	2	33	2	48	2	15	2	21
30	67	2.5	12	2	17	2	50	--	--	2	33	2	46	2	15	2	21
36	76	2	13	2	19	2	50	--	--	2	33	2	47	2	13	2	19
42	84	2	13	2	19	--	--	--	--	--	--	--	--	2	18	2	25
48	95	2	11	2	17	--	--	--	--	--	--	--	--	2	11	2	15
SANDY-SILT STRUCTURAL BACKFILL (Sn TYPES A1 & A3)																	
12	34	3.8	10	2	19	--	--	--	--	3.1	15	2	33	3.5	11	2	21
15	39	3.7	10	2	21	--	--	--	--	3.1	15	2	33	3.5	11	2	21
18	44	3.9	10	2	17	--	--	--	--	3.1	15	2	34	3.6	10	2	19
24	55	4.2	7	2	15	2	50	--	--	3	15	2	34	3.8	10	2	16
30	67	4.4	6	2.5	12	2	50	--	--	3	15	2	33	3.7	10	2	16
36	76	4.4	6	2	14	2	50	--	--	3	15	2	33	3.9	9	2	14
42	84	4.3	7	2	13	--	--	--	--	--	--	--	--	3.6	10	2	18
48	95	4.7	6	2	12	--	--	--	--	--	--	--	--	4	7	2	11

NOTE: MAXIMUM OVERFILL MEASURED FROM THE TOP OF PIPE TO SURFACE.

FILL LIMITS ACCOUNT FOR SHORT-TERM TEMPORARY WATER TABLE DEPTHS OF FIVE FEET ABOVE SPRINGLINE. TABLES ARE NOT APPLICABLE FOR LONG-TERM PERMANENT WATER TABLE DEPTHS ABOVE SPRINGLINE.

WHEN PIPES ARE USED AS GROUP A, FILL HEIGHTS ARE LIMITED TO SHADED VALUES.

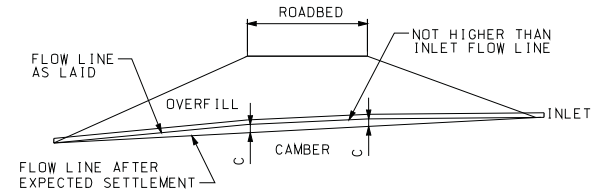

NOTE:

ON YIELDING SOIL, PIPE CULVERTS SHALL BE PLACED ON A CAMBERED FLOW LINE. THE AMOUNT OF CAMBER WILL VARY WITH SOIL CONDITION AND WILL BE SPECIFIED ON THE DESIGN PLANS.

TYPICAL CAMBERED FLOW LINE

MINIMUM COVER FOR CONSTRUCTION LOADS

PIPE DIA. (IN.)	MINIMUM COVER (FT) FOR INDICATED AXLE LOADS (THOUSANDS OF POUNDS)			
	18-50	50-75	75-110	110-150
12-36	2.0	2.5	3.0	3.0
42-48	3.0	3.0	3.5	4.0

MINIMUM COVER LIMITS ARE NOT SUFFICIENT FOR SANDY-SILT STRUCTURAL BACKFILL COMPACTED TO 90% S.P.D. THE CONTRACTOR SHALL PROVIDE MINIMUM COVER PLUS ANY ADDITIONAL COVER REQUIRED TO AVOID DAMAGE TO THE PIPE. IN UNPAVED SITUATIONS, THE SURFACE MUST BE MAINTAINED TO A LEVEL AND NON-RUTTED CONDITION.

MISSOURI HIGHWAYS AND TRANSPORTATION COMMISSION
105 WEST CAPITOL
JEFFERSON CITY, MO 65102
1-888-ASK-MODOT (1-888-275-6636)

STATE OF MISSOURI
KATHRYN PHILLIPS HARVEY
NUMBER PE-23751
PROFESSIONAL ENGINEER
THIS SHEET HAS BEEN SIGNED, SEALED AND DATED ELECTRONICALLY.

THERMOPLASTIC PIPE INSTALLATION METHODS

DATE EFFECTIVE: 04/01/2011
DATE PREPARED: 3/31/2011

730.00D

SHEET NO. 1 OF 1

IF A SEAL IS PRESENT ON THIS SHEET IT HAS BEEN ELECTRONICALLY SEALED AND DATED.

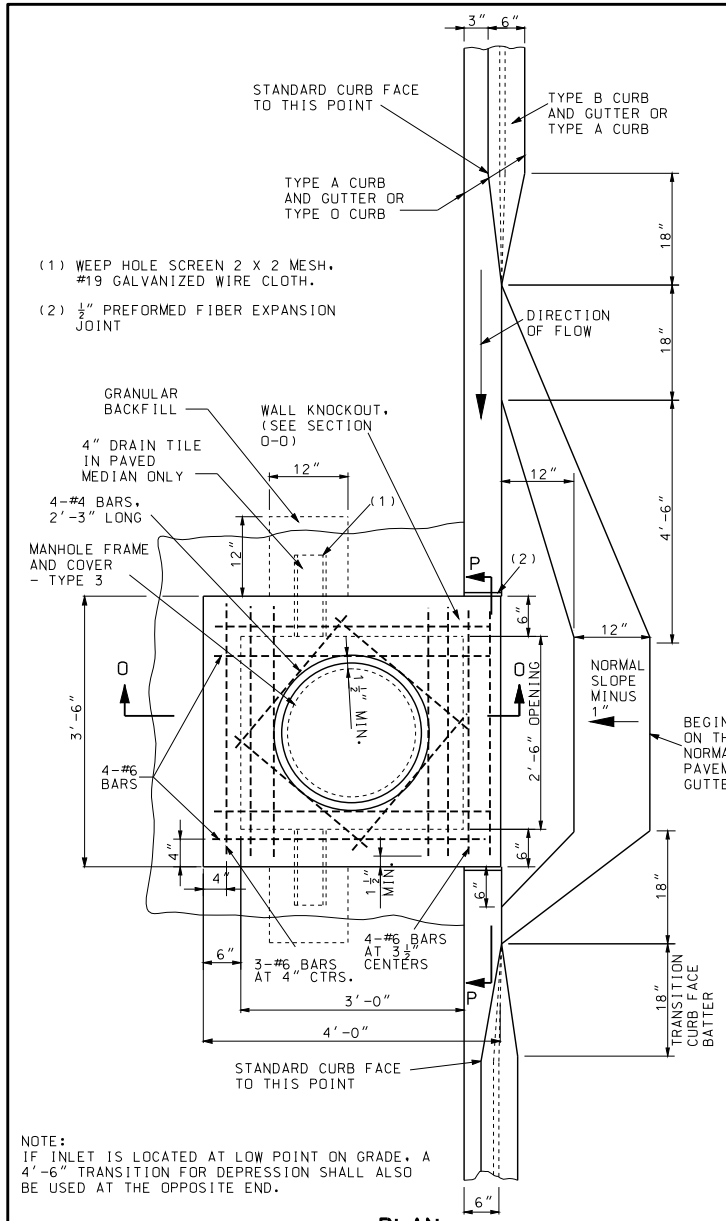

PLAN

NOTE:
IF INLET IS LOCATED AT LOW POINT ON GRADE, A 4'-6" TRANSITION FOR DEPRESSION SHALL ALSO BE USED AT THE OPPOSITE END.

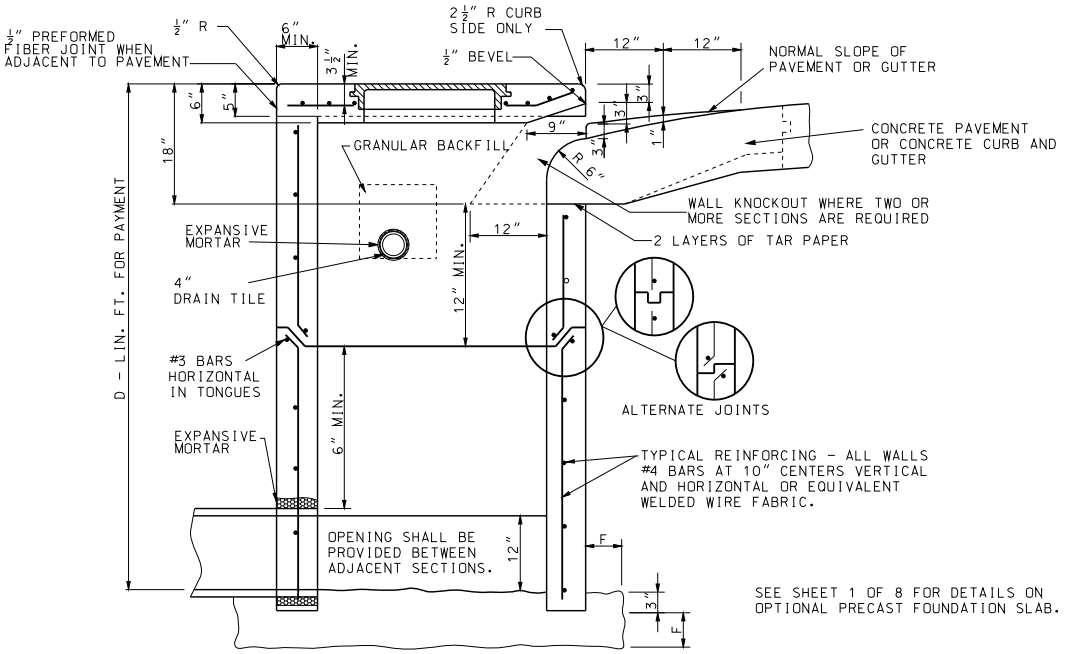

SECTION O-O

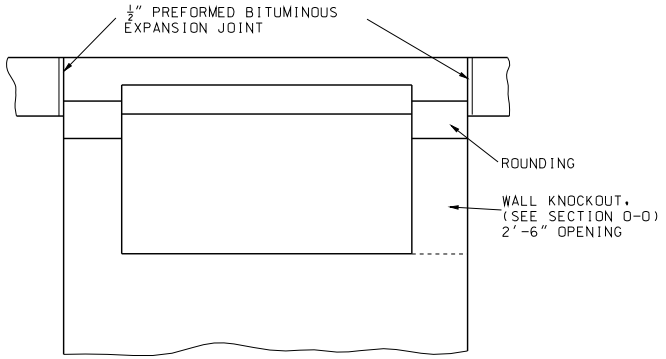

SECTION P-P
DETAILS OF OPENING

IF A SEAL IS PRESENT ON THIS SHEET IT HAS BEEN ELECTRONICALLY SEALED AND DATED.

MISSOURI HIGHWAYS AND TRANSPORTATION COMMISSION
105 WEST CAPITOL
JEFFERSON CITY, MO 65102
1-888-ASK-MODOT (1-888-275-6636)

STATE OF MISSOURI
KATHRYN PHILLIPS HARVEY
NUMBER PE-23751
PROFESSIONAL ENGINEER
THIS SHEET HAS BEEN SIGNED, SEALED AND DATED ELECTRONICALLY.

PRECAST DROP INLET
CURB INLET - TYPE T

DATE EFFECTIVE: 12/01/2005
DATE PREPARED: 9/3/2010

731.10R

SHEET NO. 5 OF 8

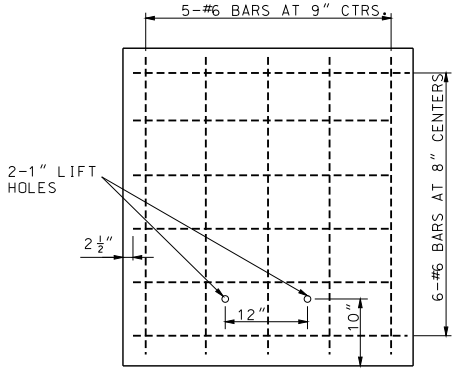

NOTE: REINFORCING FOR LIDS ON UPSTREAM SECTIONS.

LID FOR ADJACENT SECTIONS

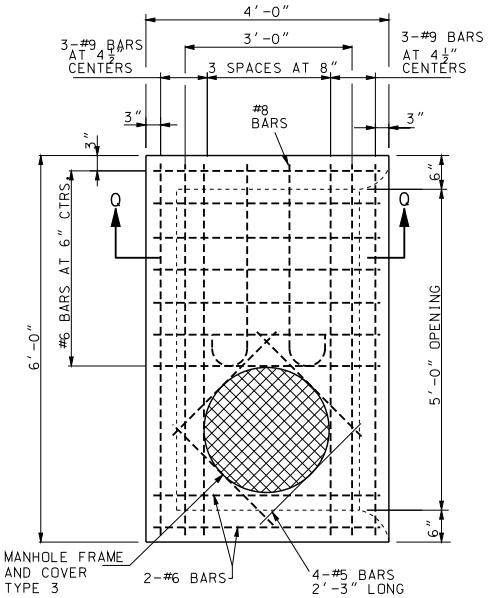

PLAN

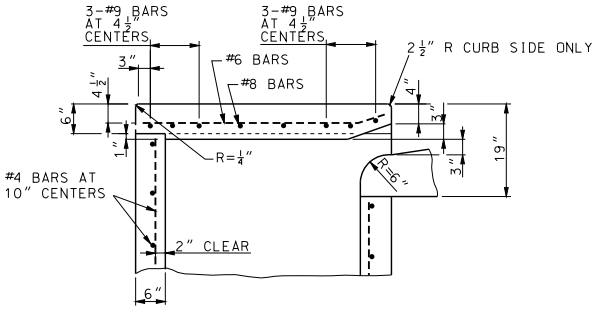

SECTION Q-Q

OPTIONAL PRECAST CURB INLET 5'-0" OPENING

OTHER DETAILS ARESAME AS FOR THE 2'-6" OPENING DROP INLET THIS SHEET.

GENERAL NOTES:

NOTES PERTAINING TO TYPE T:

THE LENGTH AND DEPTH OF THE INLET SHALL BE AS SHOWN ON THE PLANS.

WALLS BETWEEN THE ADJACENT SECTIONS SHALL BE SEALED IN ACCORDANCE WITH SECTION 726.3.1 OF THE STANDARD SPECIFICATIONS.

IF DEPTH OF INLET EXCEEDS 6 FEET THE PRECAST UNITS MAY BE FURNISHED IN TWO OR MORE SECTIONS.

IF TWO OR MORE SECTIONS ARE USED, THE TYPE 3 MANHOLE FRAME AND COVER SHALL BE IN THE DOWNSTREAM SECTION ONLY.

IF A 5 FOOT OPENING IS REQUIRED, TWO 2'-6" OPENING SECTIONS OR ONE 5 FOOT OPEING SECTION MAY BE PROVIDED AT THE CONTRACTOR'S OPTION.

SEE SHEET 1 FOR STEP DETAILS AND SHEET 4 FOR GENERAL NOTES.

MISSOURI HIGHWAYS AND TRANSPORTATION COMMISSION
105 WEST CAPITOL
JEFFERSON CITY, MO 65102
1-888-ASK-MODOT (1-888-275-6636)

STATE OF MISSOURI
KATHRYN PHILLIPS HARVEY
NUMBER PE-23751
PROFESSIONAL ENGINEER
THIS SHEET HAS BEEN SIGNED, SEALED AND DATED ELECTRONICALLY.

PRECAST DROP INLET
CURB INLET - TYPE T

DATE EFFECTIVE:	12/01/2005	731.10R	SHEET NO. 6 OF 8
DATE PREPARED:	9/3/2010		

IF A SEAL IS PRESENT ON THIS SHEET IT HAS BEEN ELECTRONICALLY SEALED AND DATED.

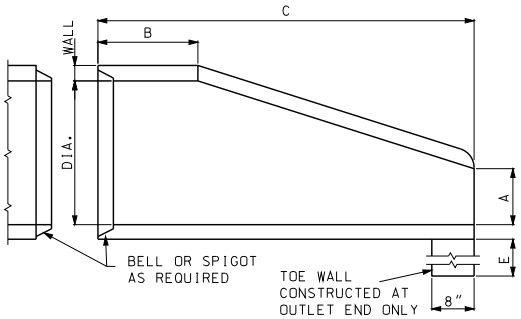

SECTION A-A

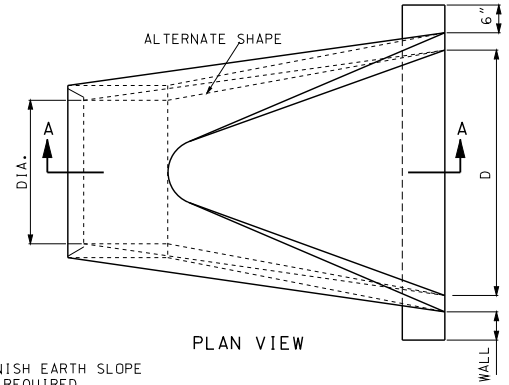

PLAN VIEW

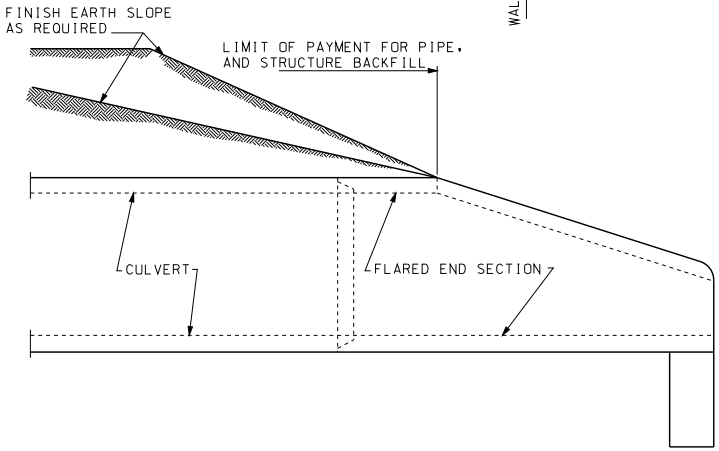

INSTALLATION DETAILS

DIMENSIONS						
DIA.	WALL	A	B MIN.	C MIN.	D	E
12"	2"	4"	4'-0"	6'	2'-0"	18"
15"	2¼"	6"	3'-10"	6'	2'-6"	18"
18"	2½"	9"	3'-10"	6'	3'-0"	18"
21"	2¾"	9"	3'-2"	6'	3'-6"	18"
24"	3"	9½"	2'-6"	6'	4'-0"	24"
27"	3¼"	10½"	2'-1"	6'	4'-6"	24"
30"	3½"	1'-0"	1'-7"	6'	5'-0"	24"
33"	3¾"	1'-2"	1'-7"	6'	5'-6"	24"
36"	4"	1'-3"	2'-10"	8'	6'-0"	24"
42"	4½"	1'-9"	2'-11"	8'	6'-6"	24"
48"	5"	2'-0"	2'-2"	8'	7'-0"	24"
54"	5½"	2'-3"	2'-11"	8'	7'-6"	36"
60"	6"	2'-6"	3'-3"	8'	8'-0"	36"
66"	6½"	2'-0"	1'-9"	8'	8'-6"	36"
72"	7"	2'-0"	2'-9"	10'	9'-0"	36"
78"	7½"	2'-3"	2'-3"	10'	9'-6"	36"
84"	8"	2'-6"	2'-0"	10'	10'-0"	36"

REINFORCEMENT					
ADJOINING PIPE DIA.	BARREL SECTION REINFORCEMENT			FLARE SECTION REINFORCEMENT (ONE LAYER ONLY IN CENTER OF WALL)	
	CIRCULAR		ELLIPTICAL		
	INNER CAGE SQ. IN./ LIN. FT.	OUTER CAGE SQ. IN./ LIN. FT.	SQ. IN./ LIN. FT.	AREA OF LONGITUDINAL SQ. IN./ LIN. FT.	AREA OF TRANSVERSE SQ. IN./ LIN. FT.
12"	0.07			0.048	0.048
15"	0.07			0.054	0.054
18"	0.07		0.07	0.060	0.060
21"	0.07		0.07	0.066	0.066
24"	0.07		0.07	0.072	0.072
27"	0.13		0.11	0.078	0.078
30"	0.14		0.12	0.084	0.084
33"	0.15		0.13	0.090	0.090
36"	0.12	0.09	0.13	0.096	0.096
42"	0.15	0.12	0.17	0.108	0.108
48"	0.18	0.14	0.20	0.120	0.120
54"	0.22	0.16	0.24	0.132	0.132
60"	0.25	0.19	0.28	0.144	0.144
66"	0.31	0.23	0.34	0.156	0.156
72"	0.35	0.21	0.39	0.170	0.170
78"	0.40	0.24	0.44	0.185	0.185
84"	0.46	0.28	0.51	0.205	0.205

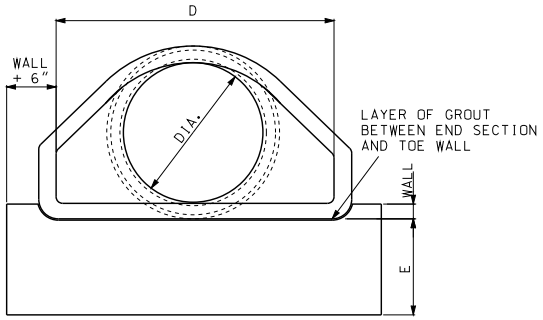

END VIEW

GENERAL NOTES:

SLIGHT VARIATIONS IN BOTH SHAPE AND DIMENSIONS FROM THOSE SHOWN MAY BE ACCEPTED IF APPROVED BY THE ENGINEER.

NOT MORE THAN THREE LIFT HOLES MAY BE DRILLED OR CAST IN THE END SECTION FOR HANDLING AND LAYING.

LIFT LUGS OR BARS WILL BE PERMITTED IN PRECAST TOE WALLS.

TOE WALLS MAY BE CAST-IN-PLACE OR PRECAST.

MISSOURI HIGHWAYS AND TRANSPORTATION COMMISSION
105 WEST CAPITOL
JEFFERSON CITY, MO 65102
1-888-ASK-MODOT (1-888-275-6636)

STATE OF MISSOURI
KATHRYN PHILLIPS HARVEY
NUMBER PE-23751
PROFESSIONAL ENGINEER
THIS SHEET HAS BEEN SIGNED, SEALED AND DATED ELECTRONICALLY.

FLARED END SECTION
PRECAST CONCRETE

DATE EFFECTIVE: 06/01/2013
DATE PREPARED: 4/1/2013

732.000

SHEET NO. 1 OF 3

IF A SEAL IS PRESENT ON THIS SHEET IT HAS BEEN ELECTRONICALLY SEALED AND DATED.

END SECTIONS FOR ARCH PIPE

TYPE	ARCH DIMENSIONS SPAN x RISE	DIAMETER EQUIVALENT ROUND PIPE IN.	GALVANIZED SHEET THICK IN.	DIMENSIONS (IN.)					APPROXIMATE SLOPE (V:H) (1:SLOPE)	TOE PLATE IF SPECIFIED P, (IN.)
				A 1" TOL.	B MAX.	H 1" TOL.	L 1½" TOL.	W 2" TOL.		
B1	SEE STANDARD PLAN 725.00	15	.064	6	9	6	19	30	2⅛	40
B2		18	.064	7	11	6	23	36	2	46
B3		21	.064	8	12	6	28	42	2⅛	52
B4		24	.064	8	16	6	32	48	2	58
B5		30	.079	10	16	6	39	60	1⅞	70
B6 OR B6A		36	.079	12	18	8	46	75	1¾	85
B7 OR B7A		42	.109	13	21	9	53	85	1⅞	107
B8 OR B8A		48	.109	18	26	12	63	90	1⅞	112
B9 OR B9A		54	.109	18	30	12	70	102	1⅞	124
B10 OR B10A		60	.109	18	33	12	77	114	1⅞	136
B11 OR B11A		66	.109	18	36	12	77	126	1⅝	148
B12 OR B12A		72	.109	18	39	12	77	138	1½	160

END SECTIONS FOR ROUND PIPE

PIPE DIAMETER (IN.)	GALVANIZED SHEET THICK (IN.)	DIMENSIONS (IN.)					APPROXIMATE SLOPE (V:H) (1:SLOPE)	TOE PLATE IF SPECIFIED P, (IN.)
		A 1" TOL.	B MAX.	H 1" TOL.	L 1½" TOL.	W 2" TOL.		
12	.064	6	6	6	21	24	2½	34
15	.064	7	8	6	26	30	2½	40
18	.064	8	10	6	31	36	2½	46
21	.064	9	12	6	36	42	2½	52
24	.064	10	13	6	41	48	2½	58
30	.079	12	16	8	51	60	2½	70
36	.079	14	19	9	60	72	2½	94
42	.109	16	22	11	69	84	2½	106
48	.109	18	27	12	78	90	2½	112
54	.109	18	30	12	84	102	2 OR 2¼	124
60	.109	18	33	12	87	114	1¾ OR 2	136
66	.109	18	36	12	87	120	1½ OR 2	144
72	.109	18	39	12	87	126	1⅓ OR 2	148
78	.109	18	42	12	87	132	1¼ OR 1½	154
84	.109	18	45	12	87	138	1⅙ OR 1½	160

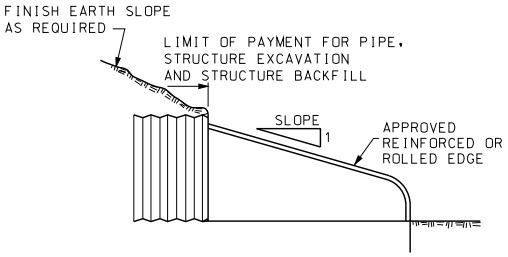

TYPICAL CROSS-SECTION

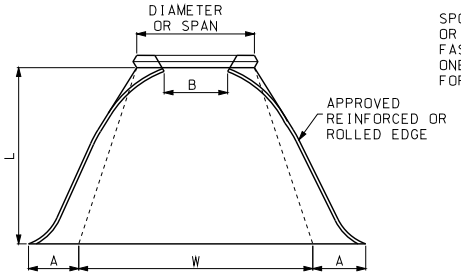

PLAN

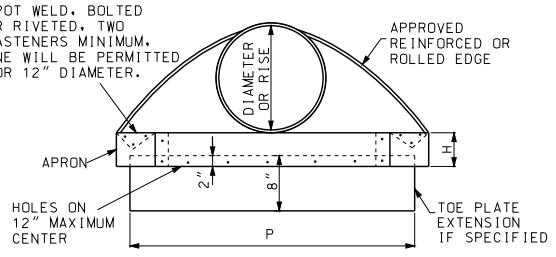

ELEVATION

END SECTION FOR PIPE AND PIPE ARCH

GENERAL NOTES:

MINOR VARIATIONS OF DETAIL AND DIMENSIONS WILL BE ACCEPTED TO PERMIT THE USE OF A MANUFACTURER'S STANDARD METHODS OF FABRICATION.

END SECTIONS FABRICATED FROM THICKER METAL THAN INDICATED WILL BE ACCEPTED.

ALL BOLTS SHALL BE ⅜" DIAMETER AND GALVANIZED, UNLESS OTHERWISE SHOWN.

TOE PLATE EXTENSIONS, IF SPECIFIED, SHALL HAVE HOLES TO MATCH HOLES IN TOE PLATE.

SKIRT SECTION IS DEFINED AS THE FLARED PORTION OF THE END SECTION INCLUDING SIDE AND BOTTOM (CENTER) PANELS AND APRON.

SKIRT SECTION FOR 12" THROUGH 24" PIPES SHALL BE MADE IN ONE PIECE.

SKIRT SECTIONS FOR 30" AND LARGER PIPES AND B5 AND LARGER PIPE ARCHES MAY BE MADE FROM UP TO 2 SHEETS JOINED BY RIVETING OR BOLTING ON CENTERLINE.

SKIRT SECTIONS FROM 48" AND LARGER PIPES AND B8 OR LARGER PIPE ARCHES MAY BE MADE FROM UP TO 3 SHEETS JOINED BY RIVETING OR BOLTING EQUAL DISTANCE FROM CENTERLINE.

SKIRT SECTIONS FOR 72" AND LARGER PIPES MAY BE MADE FROM UP TO 4 SHEETS JOINED BY RIVETING AND BOLTING. THE BOTTOM PANEL SHALL BE 2 EQUAL WIDTH SHEETS JOINED ON CENTERLINE.

ALL 3 PIECE AND 4 PIECE SKIRTS FOR 60" OR LARGER PIPES AND B10 AND LARGER PIPE ARCHES SHALL HAVE 0.109" THICK SIDES AND 0.138" THICK BOTTOM (CENTER) PANELS. WIDTH OF BOTTOM PANELS SHALL BE GREATER THAN 20% OF THE PIPE PERIPHERY CONNECTOR SECTIONS. CORNER PLATES AND TOE PLATES SHALL BE GALVANIZED AND OF THE SAME OR GREATER THICKNESS AS THE SKIRT.

SEE SHEET 3 OF 3 FOR CONNECTION DETAILS

IF A SEAL IS PRESENT ON THIS SHEET IT HAS BEEN ELECTRONICALLY SEALED AND DATED.

MISSOURI HIGHWAYS AND TRANSPORTATION COMMISSION
105 WEST CAPITOL
JEFFERSON CITY, MO 65102
1-888-ASK-MODOT (1-888-275-6636)

STATE OF MISSOURI
KATHRYN PHILLIPS HARVEY
NUMBER PE-23751
PROFESSIONAL ENGINEER
THIS SHEET HAS BEEN SIGNED, SEALED AND DATED ELECTRONICALLY.

FLARED END SECTION

METAL

DATE EFFECTIVE: 06/01/2013
DATE PREPARED: 4/1/2013

732.000

SHEET NO. 2 OF 3

CONNECTION REQUIREMENTS					
TYPE	CONNECTION TYPE	ALLOWABLE SIZE RANGE (IN.)	TAPERED SLEEVE REQUIREMENT		
			CMP	RCP PVC	PP PE
SAFETY END SECTION	2	ALL	N	Y	Y
	6	12-24	N	Y	Y
METAL FLARED END SECTION	1	12-24	N	Y	N
	2	ALL	N	Y	N
	3	ALL	N	Y	N
	4	12-24	N	Y	N
	5	12-24	N	Y	N
	6	12-24	N	Y	N

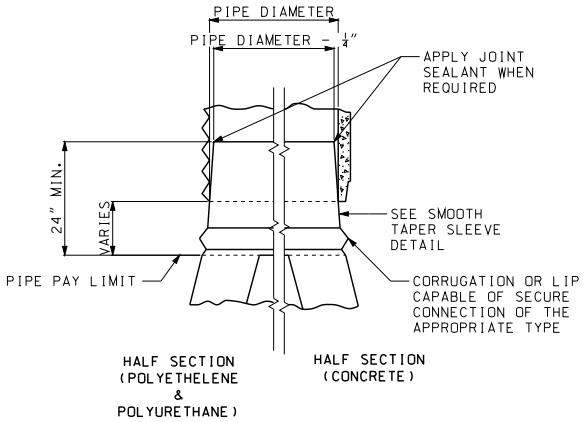

TAPERED SLEEVE CONNECTION FOR CONCRETE AND THERMOPLASTIC PIPE

TAPERED SLEEVE SHALL BE FIRMLY WEDGED INTO PIPE END BEFORE BACKFILLING PIPE PAY LENGTH.

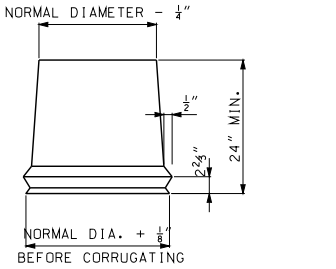

FORM ½" X 2⅔" CORRUGATIONS.
MAINTAIN INSIDE DIAMETER OF SLEEVE.
FINISHED END TO BE THE SAME DIAMETER AS CORRUGATED STEEL PIPE DIAMETER.

SMOOTH TAPERED SLEEVE DETAIL

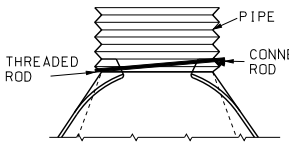

FOR 12" THRU 24" ROUND PIPE ONLY

TYPE 1 CONNECTION

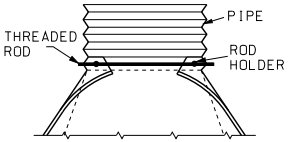

FOR 30" THRU 48" PIPE AND EQUIVALENT PIPE ARCH

TYPE 2 CONNECTION

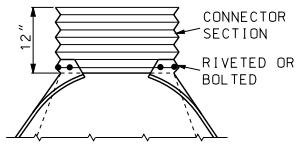

PERMISSIBLE FOR ALL SIZES

TYPE 3 CONNECTION

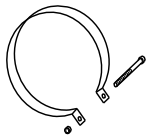

1 INCH WIDE, 0.109" THICK CONNECTOR STRAP OF COMMERCIAL QUALITY STEEL, GALVANIZED WITH SAME WEIGHT COATING AS PIPE, AND 6" x ½" GALVANIZED BAND BOLT AND NUT. USE AS ALTERNATE ON TYPE 1 CONNECTION ONLY.

CONNECTOR STRAP

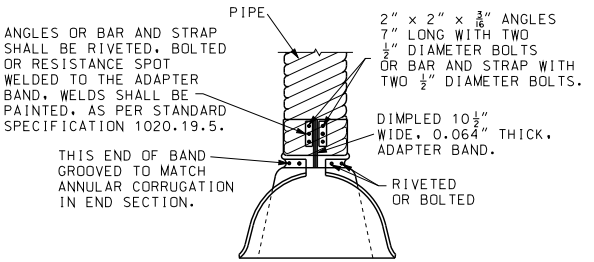

FOR 12" THRU 42" PIPE AND EQUIVALENT PIPE ARCH

TYPE 4 CONNECTION

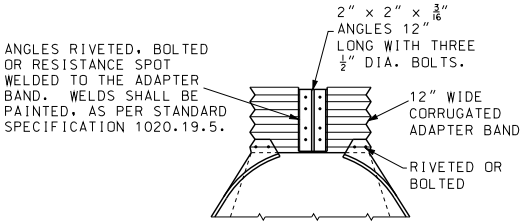

PERMISSIBLE FOR ALL SIZES THROUGH 84" PIPE AND B-12 OR B-12A PIPE ARCH

TYPE 5 CONNECTION

END SECTION FOR PIPE AND PIPE ARCH

GENERAL NOTES:

MINOR VARIATIONS OF DETAIL AND DIMENSIONS WILL BE ACCEPTED TO PERMIT THE USE OF A MANUFACTURER'S STANDARD METHODS OF FABRICATION.

TAPERED SLEEVES SHALL BE FABRICATED FROM SMOOTH 12 GUAGE STEEL COATED IN ACCORDANCE WITH AASHTO M-218.

TAPERED SLEEVES SHALL BE FIRMLY WEDGED INTO THE PIPE END BEFORE BACKFILLING PIPE PAY LENGTH.

THE LENGTH OF TAPERED SLEEVE SHALL BE SIZED TO PROTECT UV SENSITIVE PIPE MATERIALS FROM SUNLIGHT. THE ENTIRE COST OF THE TAPERED SLEEVE, HARDWARE, AND INSTALLATION SHALL BE INCLUDED IN THE COST OF THE PIPE.

TAPERED SLEEVES SHALL HAVE AT A MINIMUM A HALF CORRUGATION OR LIP DESIGNED TO PROVIDE A SECURE CONNECTION WITH THE END SECTION.

ANY ROD OR STRAP USED FOR MAKING A CONNECTION SHALL BE SECURLY SEATED INTO A VALLEY OF THE PIPE CORRUGATION. THE VALLEY CHOOSEN TO HOLD THE ROD OR STRAP SHALL LEAVE AT LEAST ONE FULL INTACT CORRUGATION BEFORE THE END OF THE PIPE. THE FEMALE PORTION OF A BELL END SHALL NOT COUNT AS A FULL INTACT CORRUGATION.

MISSOURI HIGHWAYS AND TRANSPORTATION COMMISSION
105 WEST CAPITOL
JEFFERSON CITY, MO 65102
1-888-ASK-MODOT (1-888-275-6636)

STATE OF MISSOURI
KATHRYN PHILLIPS HARVEY
NUMBER PE-23751
PROFESSIONAL ENGINEER
THIS SHEET HAS BEEN SIGNED, SEALED AND DATED ELECTRONICALLY.

FLARED END SECTION

METAL

DATE EFFECTIVE:	02/01/2009	732.000	SHEET NO.
DATE PREPARED:	4/1/2013		3 OF 3

IF A SEAL IS PRESENT ON THIS SHEET IT HAS BEEN ELECTRONICALLY SEALED AND DATED.

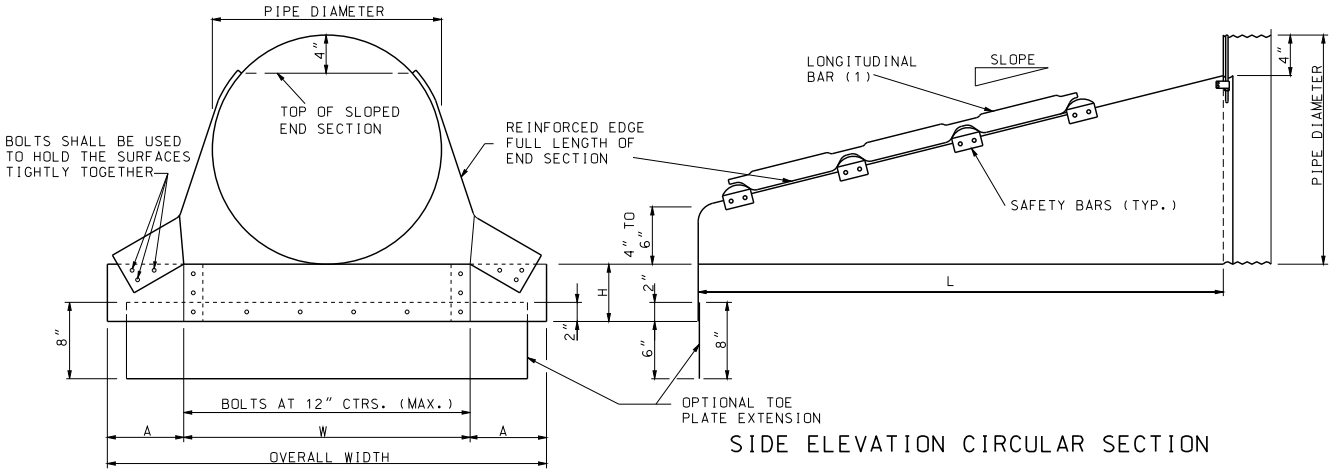

FRONT VIEW CIRCULAR PIPE

SIDE ELEVATION CIRCULAR SECTION

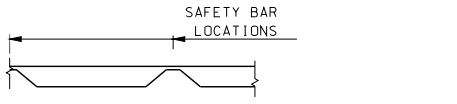

LONGITUDINAL BAR DETAIL

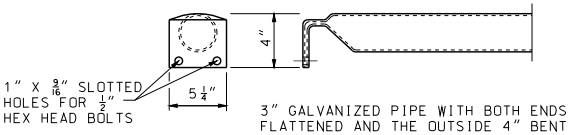

DETAIL OF SAFETY BAR

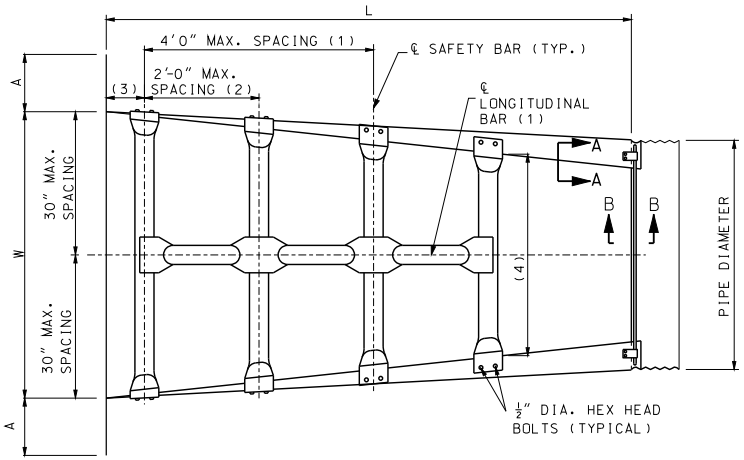

TOP VIEW CIRCULAR SECTION

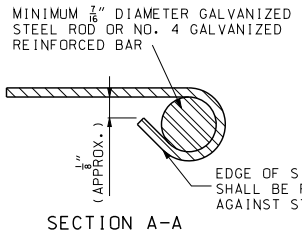

SECTION A-A

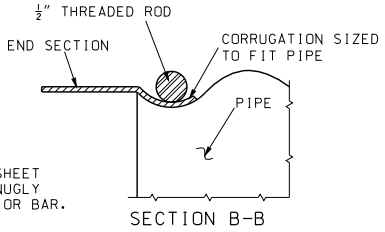

SECTION B-B

LONGITUDINAL BAR, WHEN REQUIRED, SHALL BE WELDED TO SAFETY BARS TO FORM SINGLE GRATE STRUCTURE. LONGITUDINAL BAR IS NOT TO BE USED FOR PARALLEL DRAINAGE STRUCTURES.

NOTES:
(1) FOR CROSSROAD DRAINAGE STRUCTURES ONLY.
(2) FOR PARALLEL DRAINAGE STRUCTURES ONLY.
(3) 4" TO 6" MINIMUM
(4) SAFETY BARS SHALL BE PROVIDED UNTIL THE LATERAL SPAN OF THE OPENING IS LESS THAN OR EQUAL TO 30".

GENERAL NOTES:

END SECTIONS, INCLUDING ALL BOLTS, NUTS, RODS AND STRAPS, SHALL BE FABRICATED FROM GALVANIZED STEEL MEETING THE REQUIREMENTS OF SECTION 1020.

ALL BOLTS UNLESS OTHERWISE SHOWN SHALL BE A307 BOLTS.

WHEN REQUIRED, OPTIONAL TOE PLATE EXTENSION SHALL BE PUNCHED OR DRILLED AND BOLTED TO END SECTION TOE PLATE, STEEL FOR TOE PLATE EXTENSION SHALL BE SAME GAUGE AS END SECTION. DIMENSIONS SHALL BE OVERALL WIDTH LESS 6' BY 8" HIGH.

ATTACHMENT TO CIRCULAR PIPES 15" THROUGH 24" DIAMETER SHALL BE MADE WITH TYPE #1 STRAPS. ALL OTHER SIZES SHALL BE ATTACHED WITH TYPE #2 CONNECTORS.

SAFETY BARS AND LONGITUDINAL BARS SHALL BE FABRICATED FROM STEEL PIPE MEETING THE REQUIREMENTS OF ASTM A-53 SCHEDULE 40 SPECIFICATIONS. SAFETY BARS AND LONGITUDINAL BARS SHALL BE HOT DIPPED GALVANIZED AFTER FABRICATION IN ACCORDANCE WITH SECTION 1020 OF STANDARD SPECIFICATIONS.

INSTALLATION SHALL BE PERFORMED IN ACCORDANCE WITH SECTION 725 AND 732 OF THE STANDARD SPECIFICATIONS.

SLOTTED HOLES FOR SAFETY BAR ATTACHMENT SHALL BE PROVIDED FOR ALL END SECTIONS.

MINOR VARIATIONS OF DETAIL WILL BE ACCECTED TO PERMIT THE USE OF A MANUFACTURER'S STANDARD METHODS OF FABRICATION.

END SECTIONS FABRICATED FROM THICKER METAL THAN INDICATED WILL BE ACCEPTED.

ALL BOLTS SHALL BE 3/8" DIAMETER AND GALVANIZED, UNLESS OTHERWISE SHOWN.

SKIRT SECTION IS DEFINED AS THE FLARED PORTION OF THE END SECTION INCLUDING SIDE AND BOTTOM (CENTER) PANELS AND APRON.

SKIRT SECTION FOR 12" TROUGH 24" PIPES SHALL BE MADE IN ONE PIECE.

SKIRT SECTIONS FOR 30" AND LARGER PIPES MAY BE MADE FROM UP TO 2 SHEETS JOINED BY RIVETING OR BOLTING ON CENTERLINE.

SKIRT SECTIONS FROM 48" AND LARGER PIPES MAY BE MADE FROM UP TO 3 SHEETS JOINED BY RIVETING OR BOLTING EQUAL DISTANCE FROM CENTERLINE.

ALL 3 PIECE SKIRTS FOR 60" PIPES SHALL HAVE 0.109" THICK SIDES AND 0.138" THICK BOTTOM (CENTER) PANELS. WIDTH OF BOTTOM PANELS SHALL BE GREATER THAN 20% OF THE PIPE PERIPHERY CONNECTOR SECTION. CORNER PLATES AND TOE PLATES SHALL BE GALVANIZED AND OF THE SAME OR GREATER THICKNESS AS THE SKIRT.

IF A SEAL IS PRESENT ON THIS SHEET IT HAS BEEN ELECTRONICALLY SEALED AND DATED.

MISSOURI HIGHWAYS AND TRANSPORTATION COMMISSION
105 WEST CAPITOL
JEFFERSON CITY, MO 65102
1-888-ASK-MODOT (1-888-275-6636)

STATE OF MISSOURI
KATHRYN PHILLIPS HARVEY
NUMBER PE-23751
PROFESSIONAL ENGINEER
THIS SHEET HAS BEEN SIGNED, SEALED AND DATED ELECTRONICALLY.

SAFETY SLOPE END SECTION

DATE EFFECTIVE: 06/01/2013
DATE PREPARED: 4/1/2013

732.10H

SHEET NO. 1 OF 3

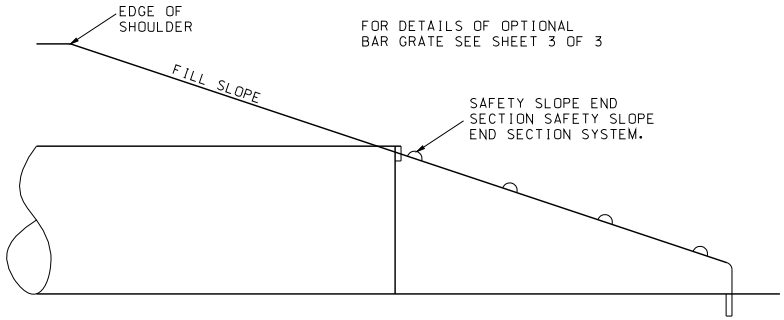

FOR DETAILS OF OPTIONAL
BAR GRATE SEE SHEET 3 OF 3

PIPE END DETAILS FOR DRAINAGE STRUCTURES

(SINGLE PIPE INSTALLATION)

NOTE:
SEE DRIVEWAY STANDARD PLANS FOR
BEVELED END SECTION REQUIREMENT.

FOR CONNECTION DETAILS, SEE 732.00
SHEET 3 OF 3.

METAL END SECTIONS FOR CIRCULAR PIPES

PIPE DIA. (IN.)	MIN. GAUGE ENDS (IN.) 4:1 & 6:1	MIN. GAUGE ENDS (IN.) 10:1	DIMENSIONS IN INCHES				L DIMENSIONS					
			A 1" TOL.	H 1" TOL.	W 2" TOL.	OVERALL WIDTH	SLOPE	LENGTH (IN.)	SLOPE	LENGTH (IN.)	SLOPE	LENGTH (IN.)
15	16	12	8	6	21	37	4:1	20	6:1	30	10:1	70
18	16	12	8	6	24	40	4:1	32	6:1	48	10:1	100
21	16	12	8	6	27	43	4:1	44	6:1	66	10:1	130
24	16	12	8	6	30	46	4:1	56	6:1	84	10:1	160
30	12		12	9	36	60	4:1	80	6:1	120	10:1	220
36	12		12	9	42	66	4:1	104	6:1	156	10:1	280
42	12		16	12	48	80	4:1	128	6:1	192		
48	12		16	12	54	86	4:1	152	6:1	228		
54	12		16	12	60	92	4:1	176	6:1	264		
60	12		16	12	66	98	4:1	200	6:1	300		

IF A SEAL IS PRESENT ON THIS SHEET IT HAS BEEN ELECTRONICALLY SEALED AND DATED.

MISSOURI HIGHWAYS AND TRANSPORTATION COMMISSION
105 WEST CAPITOL
JEFFERSON CITY, MO 65102
1-888-ASK-MODOT (1-888-275-6636)

STATE OF MISSOURI
KATHRYN PHILLIPS HARVEY
NUMBER PE-23751
PROFESSIONAL ENGINEER
THIS SHEET HAS BEEN SIGNED, SEALED AND DATED ELECTRONICALLY.

SAFETY SLOPE END SECTION

DATE EFFECTIVE: 06/01/2013
DATE PREPARED: 4/1/2013

732.10H

SHEET NO. 2 OF 3

BAR GRATE SYSTEM DATA

DRAIN PIPE SIZE	3:1 SLOPE									4:1 SLOPE									6:1 SLOPE								
	A	B	C	D	E	"F" BARS	G	H	J	A	B	C	D	E	"F" BARS	G	H	J	A	B	C	D	E	"F" BARS	G	H	J
15"**																											
18"**																											
21"**																											
24"	0	4	2'-0"	6"	15"	$\frac{5}{8}$"	$8\frac{1}{4}$"	3'-3"	18.4°	0	4	2'-0"	$15\frac{3}{4}$"	15"	$\frac{5}{8}$"	12"	3'-3"	14°	2	4	2'-0"	$13\frac{1}{8}$"	15"	$\frac{5}{8}$"	12"	3'-3"	9.5°
30"	0	5	2'-6"	$15\frac{1}{4}$"	18"	$\frac{5}{8}$"	12"	3'-9"	18.4°	1	5	2'-6"	$16\frac{1}{2}$"	18"	$\frac{5}{8}$"	12"	3'-9"	14°	3	5	2'-6"	$19\frac{5}{8}$"	18"	$\frac{5}{8}$"	12"	3'-9"	9.5°
36"	1	6	3'-0"	$16\frac{1}{4}$"	18"	$\frac{3}{4}$"	12"	4'-3"	18.4°	2	6	3'-0"	18"	18"	$\frac{3}{4}$"	$17\frac{1}{4}$"	4'-3"	14°	5	6	3'-0"	$20\frac{1}{8}$"	18"	$\frac{3}{4}$"	12"	4'-3"	9.5°
42"	2	7	3'-6"	$17\frac{1}{4}$"	18"	1"	12"	4'-9"	18.4°	4	7	3'-6"	12"	18"	1"	12"	4'-9"	14°	7	7	3'-6"	$11\frac{7}{8}$"	18"	1"	9"	4'-9"	10.1°
48"	3	8	4'-0"	18"	18"	1"	$12\frac{1}{8}$"	5'-3"	18.4°	5	8	4'-0"	18"	18"	1"	$12\frac{5}{8}$"	5'-3"	14°	7	8	4'-0"	13"	18"	1"	9"	5'-3"	11.9°
54"	4	9	4'-6"	18"	18"	$1\frac{1}{8}$"	$13\frac{1}{8}$"	5'-9"	18.4°	6	9	4'-6"	18"	18"	$1\frac{1}{8}$"	$19\frac{3}{8}$"	5'-9"	14°	7	9	4'-6"	$14\frac{1}{4}$"	18"	$1\frac{1}{8}$"	9"	5'-9"	13.7°

** BAR GRATE SYSTEM IS NOT REQUIRED FOR DRAIN PIPE DIAMETER OF 21" OR LESS, FOR SINGLE PIPE INSTALLATIONS.

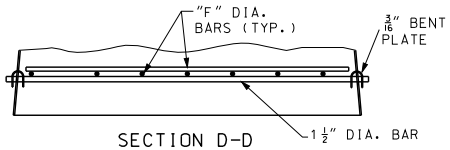

SECTION D-D

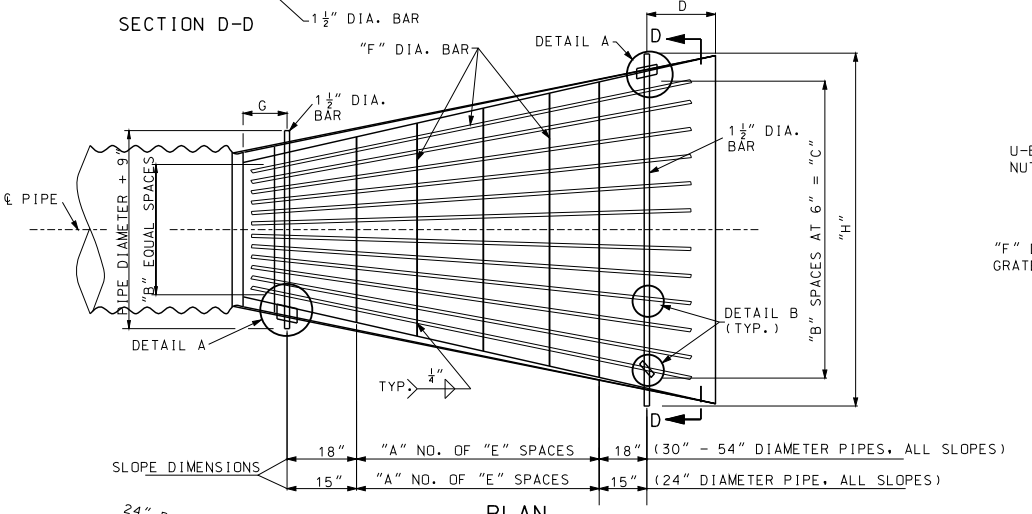

PLAN

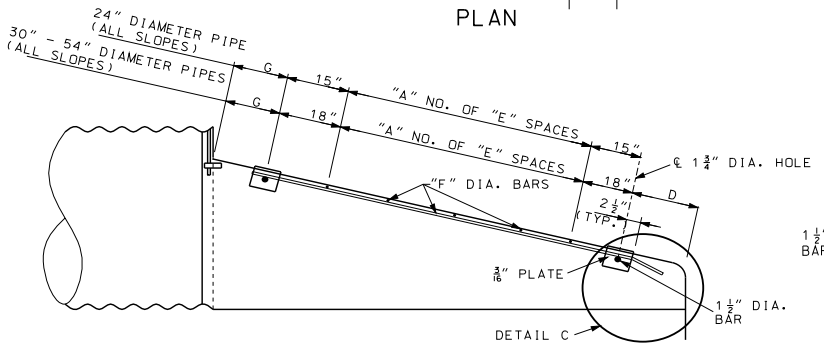

ELEVATION

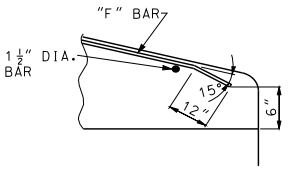

DETAIL C

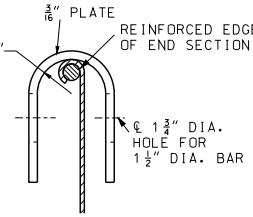

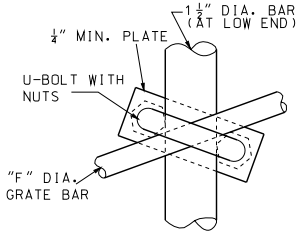

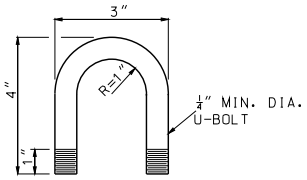

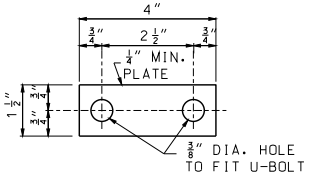

DETAIL B
U-BOLT ANCHOR

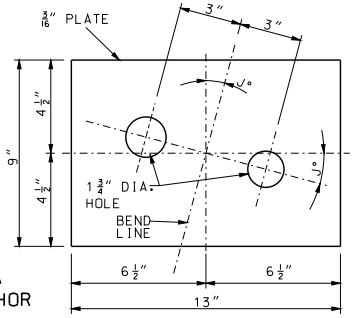

DETAIL A
BENT PLATE ANCHOR

GENERAL NOTES:

ALL STEEL MATERIAL FOR BAR GRATE SYSTEM SHALL BE IN ACCORDANCE WITH ASTM A575 GRADE 1020 STEEL.

ALL MATERIAL IN GRATE SYSTEM SHALL BE GALVANIZED.

GALVANIZING SHALL BE DONE IN ACCORDANCE WITH ASTM A123.

ALL MATERIALS, FABRICATION AND INSTALLATION OF OPTIONAL BAR GRATE SYSTEM USED IN LIEU OF SAFETY BAR SYSTEM SHALL BE INCLUDED IN CONTRACT UNIT PRICE BID FOR END SECTION (SAFETY SLOPE).

MISSOURI HIGHWAYS AND TRANSPORTATION COMMISSION
105 WEST CAPITOL
JEFFERSON CITY, MO 65102
1-888-ASK-MODOT (1-888-275-6636)

STATE OF MISSOURI KATHRYN PHILLIPS HARVEY NUMBER PE-23751 PROFESSIONAL ENGINEER
THIS SHEET HAS BEEN SIGNED, SEALED AND DATED ELECTRONICALLY.

OPTIONAL BAR GRATE SYSTEM FOR SAFETY SLOPE END SECTION

DATE EFFECTIVE: 06/01/2013
DATE PREPARED: 4/1/2013

732.10H

SHEET NO. 3 OF 3

IF A SEAL IS PRESENT ON THIS SHEET IT HAS BEEN ELECTRONICALLY SEALED AND DATED.

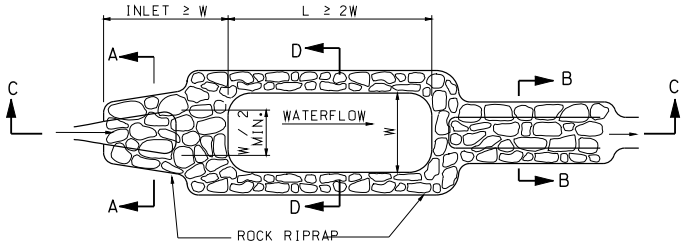

PLAN VIEW

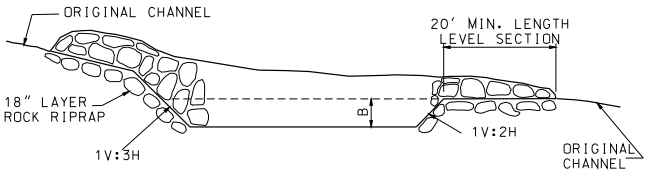

SECTION C-C

EFFECTIVE DEPTH "B" = MIN. 2', MAX. 6' DEPENDENT UPON CONFIGURATION REQUIRED BY LOCATION AND ESTIMATED VOLUME.

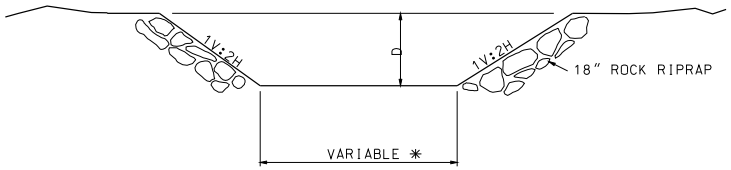

SECTION A-A
INLET

D = 1.0' + DESIGN FLOW DEPTH-MIN.
✳ VARIES FROM WIDTH OF STREAM AT INLET TO ONE-HALF WIDTH OF POND AT OUTLET.

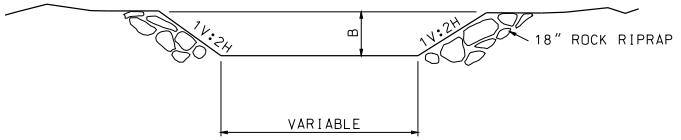

SECTION D-D

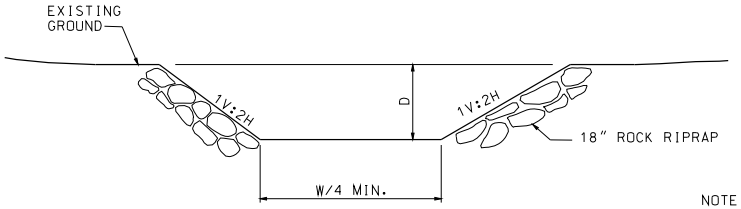

SECTION B-B
OUTLET

NOTE:

SEDIMENT BASINS ARE TO BE INCLUDED IN THE BMP SYSTEM WHEN THE GEOMETRY OF RIGHT-OF-WAY ALLOWS. WHERE INCLUDED, SEDIMENT BASINS ARE TO BE DESIGNED AND CONSTRUCTED TO PROVIDE STORAGE VOLUME FOR THE LOCAL 2-YR, 24-HOUR STORM FOR DISTURBED ACREAGE DRAINING TO THEM. IF THE DESIGN STORM VOLUME HAS NOT BEEN CALCULATED, BASINS ARE TO BE DESIGNED AND CONSTRUCTED TO PROVIDE A STORAGE VOLUME OF AT LEAST 3,600 CUBIC FEET PER DISTURBED ACRE DRAINING TO THE BASIN(S).

GENERAL NOTES:

THE MATERIALS FOR ROCK RIPRAP SHALL MEET THE REQUIREMENTS OF SECTION 611.30 FOR TYPE 2 ROCK BLANKET.

SEE PLANS FOR LENGTH, DEPTH AND WIDTH OF BASIN.

SEE PLANS FOR ESTIMATED QUANTITIES OF ROCK RIPRAP - CUBIC YARDS.

MISSOURI HIGHWAYS AND TRANSPORTATION COMMISSION
105 WEST CAPITOL
JEFFERSON CITY, MO 65102
1-888-ASK-MODOT (1-888-275-6636)

STATE OF MISSOURI
KATHRYN PHILLIPS HARVEY
NUMBER PE-23751
PROFESSIONAL ENGINEER
THIS SHEET HAS BEEN SIGNED, SEALED AND DATED ELECTRONICALLY.

TEMPORARY EROSION CONTROL MEASURES
SEDIMENT BASIN

DATE EFFECTIVE: 04/01/2009 DATE PREPARED: 1/17/2013	806.10H	SHEET NO. 4 OF 7	

IF A SEAL IS PRESENT ON THIS SHEET IT HAS BEEN ELECTRONICALLY SEALED AND DATED.

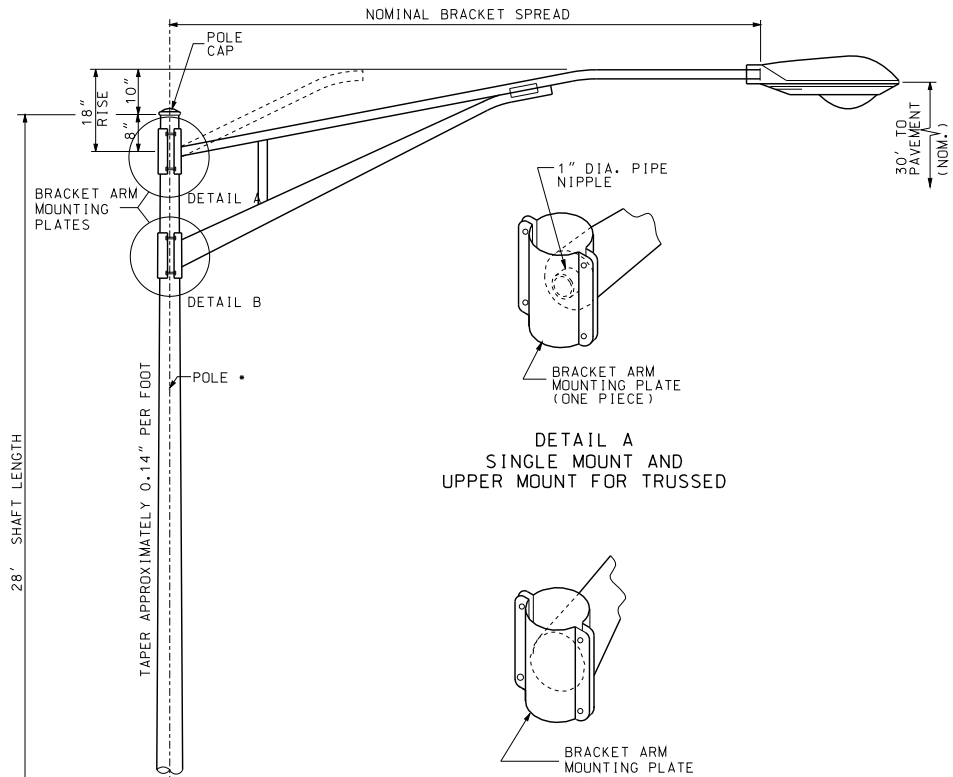

DETAIL A
SINGLE MOUNT AND
UPPER MOUNT FOR TRUSSED

DETAIL B
LOWER MOUNT FOR TRUSSED

TYPICAL BRACKET ARM MOUNTING

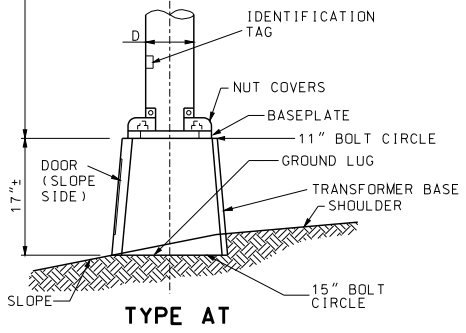

TYPE AT

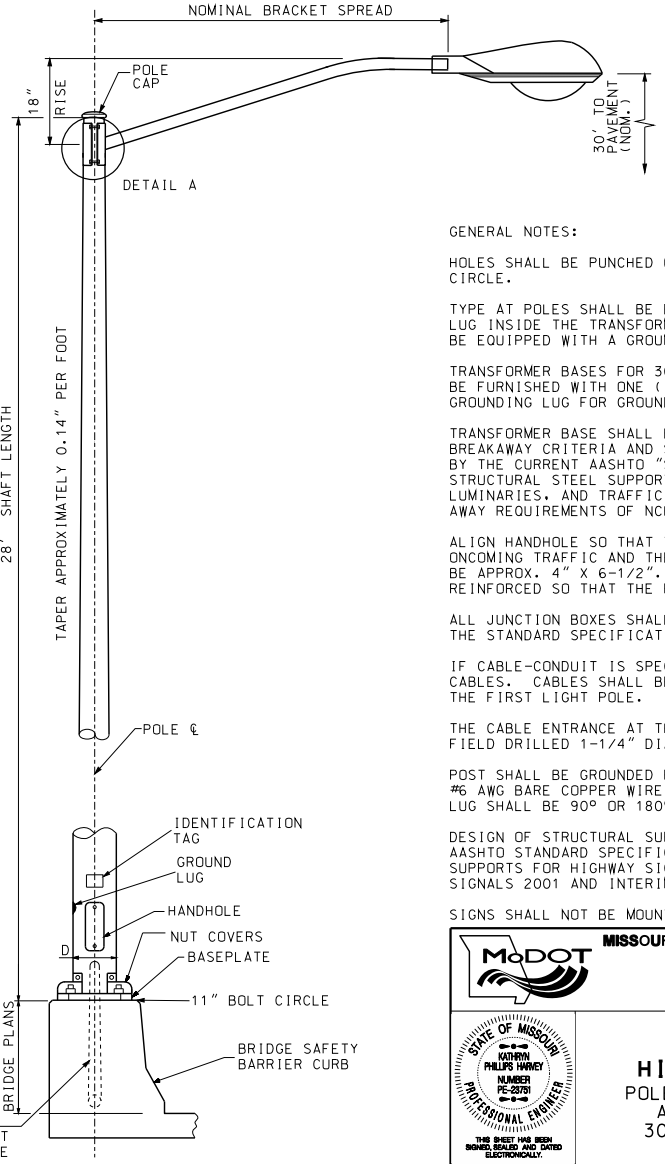

WIRES SHALL BE SPLICED AT FUSED CONNECTOR IN POLE BASE. IF CABLE-CONDUIT IS SPECIFIED, CUT CONDUIT AWAY FROM THE CABLES WHERE CABLE-CONDUIT ENTERS THE RIGID CONDUIT SYSTEM. (SEE DRAWING 901.02)

TYPE B

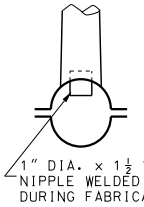

PLAN VIEW OF DETAIL A

GENERAL NOTES:

HOLES SHALL BE PUNCHED ONLY FOR SPECIFIED BOLT CIRCLE.

TYPE AT POLES SHALL BE EQUIPPED WITH THE GROUNDING LUG INSIDE THE TRANSFORMER BASE. TYPE B POLES SHALL BE EQUIPPED WITH A GROUNDING LUG INSIDE THE POLE.

TRANSFORMER BASES FOR 30 FOOT MOUNTING HEIGHT SHALL BE FURNISHED WITH ONE (1) DRILLED AND TAPPED HOLE AND GROUNDING LUG FOR GROUNDING EQUIPMENT.

TRANSFORMER BASE SHALL BE CERTIFIED AS MEETING THE BREAKAWAY CRITERIA AND STRUCTURAL REQUIREMENTS AS SET BY THE CURRENT AASHTO "STANDARD SPECIFICATIONS FOR STRUCTURAL STEEL SUPPORTS FOR HIGHWAY SIGNS, LUMINARIES, AND TRAFFIC SIGNALS" AND MEET THE BREAK-AWAY REQUIREMENTS OF NCHRP 350.

ALIGN HANDHOLE SO THAT THE POLE IS BETWEEN THE ONCOMING TRAFFIC AND THE HANDHOLE. HANDHOLE SHALL BE APPROX. 4" X 6-1/2". HANDHOLE FRAME SHALL BE REINFORCED SO THAT THE POLE STRENGTH IS NOT REDUCED.

ALL JUNCTION BOXES SHALL CONFORM TO SECTION 1062 OF THE STANDARD SPECIFICATIONS.

IF CABLE-CONDUIT IS SPECIFIED, CUT CONDUIT AWAY FROM CABLES. CABLES SHALL BE CONTINUOUS AND UNSPLICED TO THE FIRST LIGHT POLE.

THE CABLE ENTRANCE AT THE BRACKET ARM SHALL BE A FIELD DRILLED 1-1/4" DIAMETER HOLE.

POST SHALL BE GROUNDED FROM GROUND LUG IN POST WITH #6 AWG BARE COPPER WIRE TO CONDUIT SYSTEM. GROUND LUG SHALL BE 90° OR 180° FROM THE HANDHOLE.

DESIGN OF STRUCTURAL SUPPORTS SHALL COMPLY WITH AASHTO STANDARD SPECIFICATIONS FOR STRUCTURAL SUPPORTS FOR HIGHWAY SIGNS, LUMINAIRES AND TRAFFIC SIGNALS 2001 AND INTERIMS THROUGH 2003.

SIGNS SHALL NOT BE MOUNTED ON LIGHTING POLES.

MISSOURI HIGHWAYS AND TRANSPORTATION COMMISSION
105 WEST CAPITOL
JEFFERSON CITY, MO 65102
1-888-ASK-MODOT (1-888-275-6636)

STATE OF MISSOURI
KATHRYN PHILLIPS HARVEY
NUMBER PE-23751
PROFESSIONAL ENGINEER
THIS SHEET HAS BEEN SIGNED, SEALED AND DATED ELECTRONICALLY.

HIGHWAY LIGHTING

POLES, FOUNDATIONS AND APPURTENANCES FOR 30' MOUNTING HEIGHT

DATE EFFECTIVE:	02/01/2011	901.00Z	SHEET NO.
DATE PREPARED:	12/8/2010		1 OF 4

IF A SEAL IS PRESENT ON THIS SHEET IT HAS BEEN ELECTRONICALLY SEALED AND DATED.

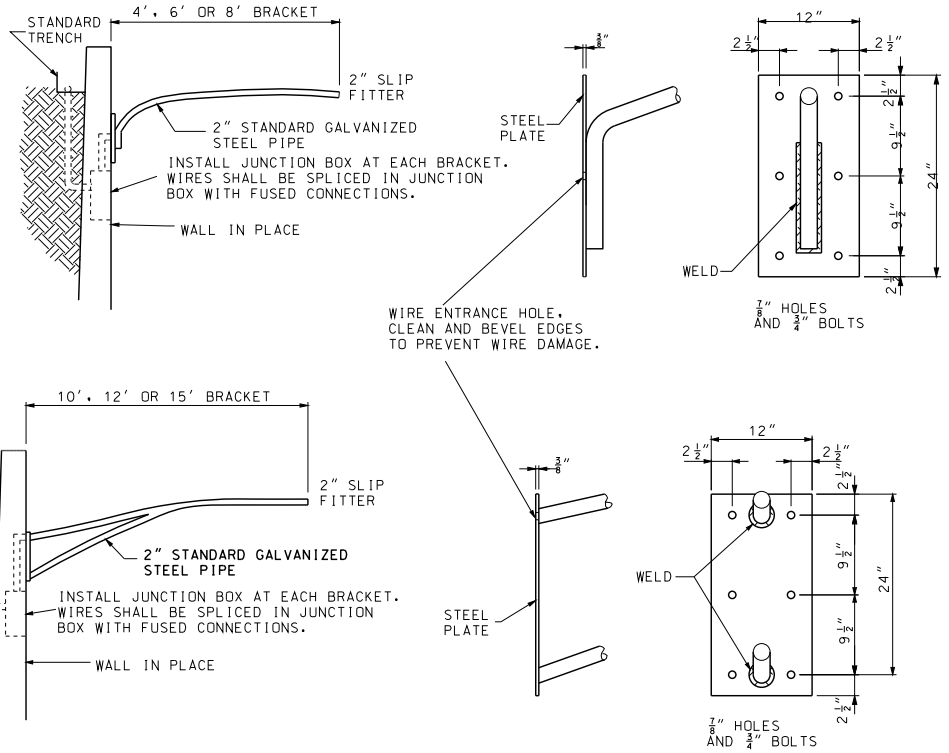

WALL BRACKETS

FACE PLATE DETAILS

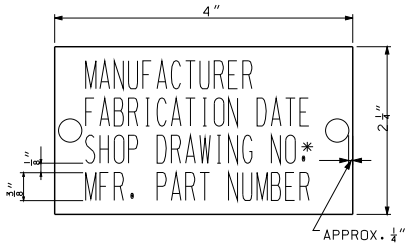

ID TAG NOTE:
TAG SHALL BE ALUMINUM OR STAINLESS STEEL AND ATTACHED TO POLE USING TWO RIVETS OR STAINLESS STEEL DRIVE SCREWS.

* INCLUDING REVISION

IDENTIFICATION TAG

GENERAL NOTES:

HOLES SHALL BE PUNCHED ONLY FOR SPECIFIED BOLT CIRCLE.

TYPE AT POLES SHALL BE EQUIPPED WITH THE GROUNDING LUG INSIDE THE TRANSFORMER BASE. TYPE B POLES SHALL BE EQUIPPED WITH A GROUNDING LUG INSIDE THE POLE.

TRANSFORMER BASES FOR 30 FOOT MOUNTING HEIGHT SHALL BE FURNISHED WITH ONE (1) DRILLED AND TAPPED HOLE AND GROUNDING LUG FOR GROUNDING EQUIPMENT.

TRANSFORMER BASE SHALL BE CERTIFIED AS MEETING THE BREAKAWAY CRITERIA AND STRUCTURAL REQUIREMENTS AS SET BY THE CURRENT AASHTO "STANDARD SPECIFICATIONS FOR STRUCTURAL STEEL SUPPORTS FOR HIGHWAY SIGNS, LUMINARIES, AND TRAFFIC SIGNALS" AND MEET THE BREAK-AWAY REQUIREMENTS OF NCHRP 350.

ALIGN HANDHOLE SO THAT THE POLE IS BETWEEN THE ONCOMING TRAFFIC AND THE HANDHOLE. HANDHOLE SHALL BE APPROX. 4" X 6-1/2". HANDHOLE FRAME SHALL BE REINFORCED SO THAT THE POLE STRENGTH IS NOT REDUCED.

ALL JUNCTION BOXES SHALL CONFORM TO SECTION 1062 OF THE STANDARD SPECIFICATIONS.

IF CABLE-CONDUIT IS SPECIFIED, CUT CONDUIT AWAY FROM CABLES. CABLES SHALL BE CONTINUOUS AND UNSPLICED TO THE FIRST LIGHT POLE.

THE CABLE ENTRANCE AT THE BRACKET ARM SHALL BE A FIELD DRILLED 1-1/4" DIA. HOLE.

POST SHALL BE GROUNDED FROM GROUND LUG IN POST WITH #6 AWG BARE COPPER WIRE TO CONDUIT SYSTEM. GROUND LUG SHALL BE 90° OR 180° FROM THE HANDHOLE.

ID TAG HOLES SHALL BE DRILLED INTO POLE PRIOR TO GALVANIZING.

ANSI LAMPS			
FUSE RATING	DESIGNATION HPS	WATTS	INITIAL LUMENS
3 A	S55	150	16,000
TYPE III MEDIUM DISTRIBUTION SEMI-CUTOFF UNLESS OTHERWISE SPECIFIED ON PLANS			

TYPE AT POLE				
BRACKET SPREAD		4'-10'	12'	15'
MAX. LUMINAIRE WEIGHT		75 LB	71 LB	66 LB
MAX. PROJECTED AREA		3.3 SQ. FT.		
SINGLE AND TRUSSED BRACKET ARMS				
LOCATION	LENGTH POLE	BRACKET SPREAD	TRANS. BASE BOLT CIRC.	D
SHOULDER	28'	4',6',8', 10',12',15'	15"	8"

TYPE B POLE				
BRACKET SPREAD		4'	6'	8'
MAX. LUMINAIRE WEIGHT		75 LB	75 LB	54 LB
MAX. PROJECTED AREA		3.3 SQ. FT.		
SINGLE BRACKET ARM				
LOCATION	LENGTH POLE	BRACKET SPREAD	D	ANCHOR BOLT DIA.
BRIDGE SAFETY BARRIER CURB	28'	4',6' 8'	8"	1"

MISSOURI HIGHWAYS AND TRANSPORTATION COMMISSION
105 WEST CAPITOL
JEFFERSON CITY, MO 65102
1-888-ASK-MODOT (1-888-275-6636)

STATE OF MISSOURI
KATHRYN PHILLIPS HARVEY
NUMBER PE-23751
PROFESSIONAL ENGINEER
THIS SHEET HAS BEEN SIGNED, SEALED AND DATED ELECTRONICALLY.

HIGHWAY LIGHTING

POLES, FOUNDATIONS AND APPURTENANCES FOR 30' MOUNTING HEIGHT

DATE EFFECTIVE: 02/01/2011
DATE PREPARED: 12/8/2010

901.00Z

SHEET NO. 2 OF 4

IF A SEAL IS PRESENT ON THIS SHEET IT HAS BEEN ELECTRONICALLY SEALED AND DATED.

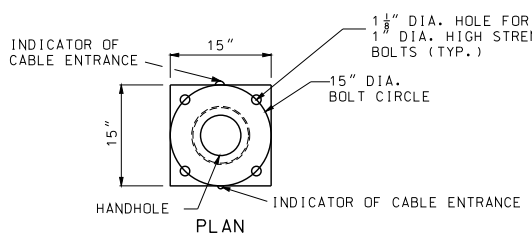

PLAN

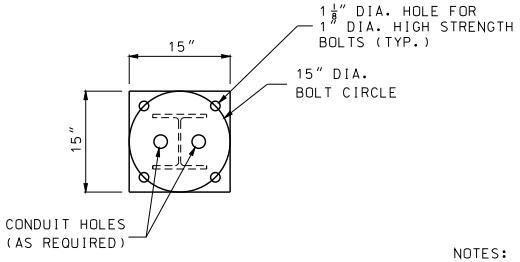

PLAN

NOTES:

(1) GRIND WELD AS NECESSARY TO CLEAR BOLT HEAD.

(2) FOUNDATIONS SHALL BE INSTALLED SO THAT CONNECTOR PLATES ARE LEVEL PERPENDICULAR TO THE BRACKET ARM AND SLOPED FOR POLE RAKING PARALLEL TO THE BRACKET ARM.

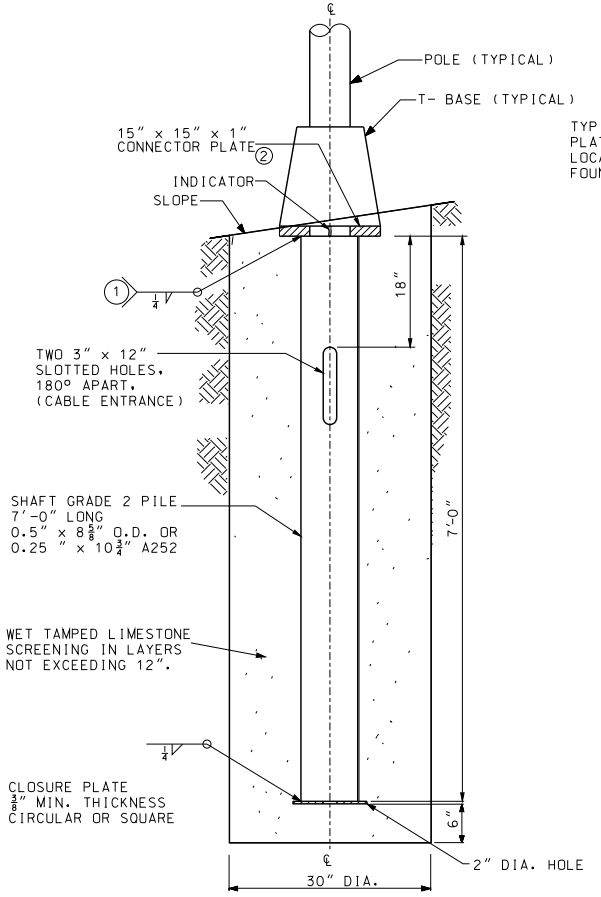

ELEVATION

DETAILS OF CIRCULAR STEEL PILE FOUNDATION

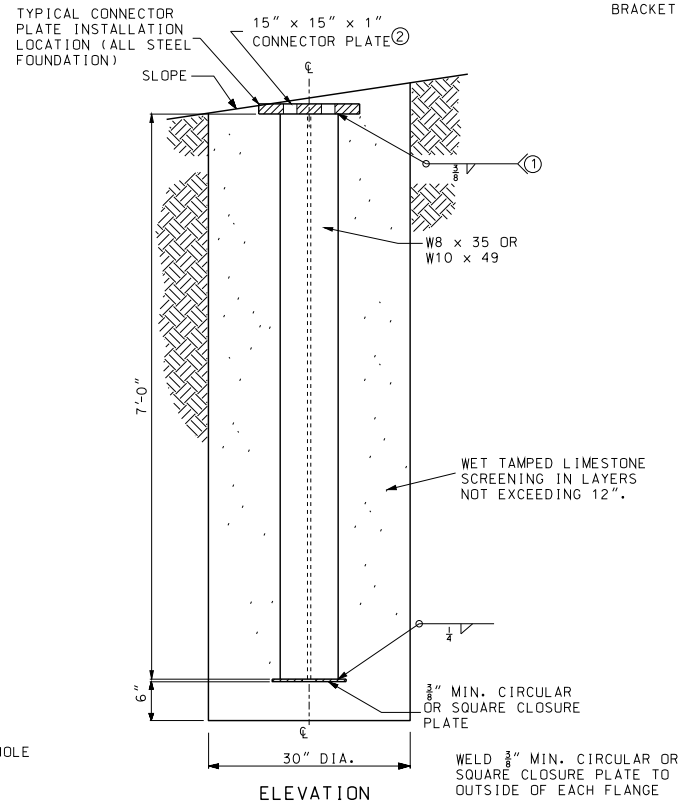

ELEVATION

DETAILS OF STEEL "H" PILE FOUNDATION

GENERAL NOTES:

ALL CLASSIFICATIONS ARE ASTM UNLESS OTHERWISE NOTED. SEE STANDARD SPECIFICATIONS FOR CLASSIFICATIONS NOT SHOWN.

ALL CONNECTOR PLATE AND CLOSURE PLATE THICKNESSES SHOWN ARE MINIMUM DIMENSIONS.

ALL ANCHOR BOLTS SHALL BE FULLY GALVANIZED 1" DIA. HIGH STRENGTH ANCHOR BOLTS.

ALL STEEL COMPONENTS SHALL BE HOT DIP GALVANIZED.

MISSOURI HIGHWAYS AND TRANSPORTATION COMMISSION
105 WEST CAPITOL
JEFFERSON CITY, MO 65102
1-888-ASK-MODOT (1-888-275-6636)

STATE OF MISSOURI
KATHRYN PHILLIPS HARVEY
NUMBER PE-23751
PROFESSIONAL ENGINEER
THIS SHEET HAS BEEN SIGNED, SEALED AND DATED ELECTRONICALLY.

HIGHWAY LIGHTING

POLES, FOUNDATIONS AND APPURTENANCES FOR 30' MOUNTING HEIGHT

DATE EFFECTIVE: 02/01/2011	901.00Z	SHEET NO. 3 OF 4
DATE PREPARED: 12/8/2010		

IF A SEAL IS PRESENT ON THIS SHEET IT HAS BEEN ELECTRONICALLY SEALED AND DATED.

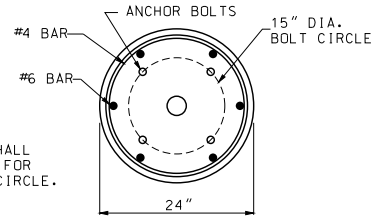

ANCHOR BOLTS SHALL BE PLACED ONLY FOR 15" DIA. BOLT CIRCLE.

PLAN

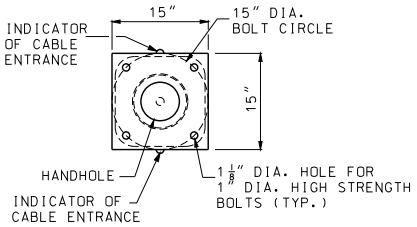

PLAN

DRIVE HOLES WILL BE PERMITTED PROVIDED THAT THEY DO NOT CONFLICT WITH OR COMPROMISE THE STRUCTURAL INTEGRITY OF THE PLATE, THE WELD BETWEEN THE PLATE AND SHAFT, OR THE BOLT HOLES.

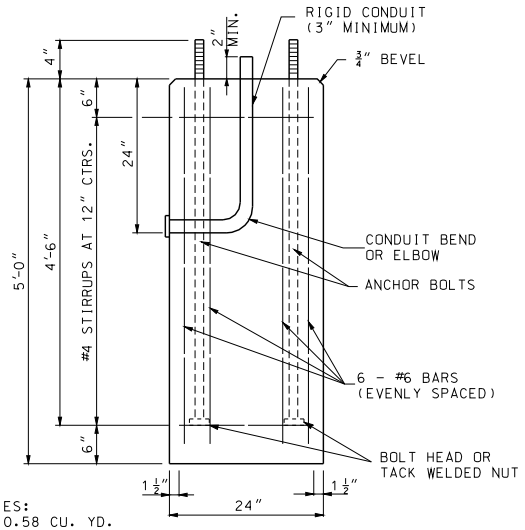

QUANTITIES:
CONC. = 0.58 CU. YD.
REIN. = 64 LBS.

ELEVATION

DETAILS OF CONCRETE FOUNDATION ③

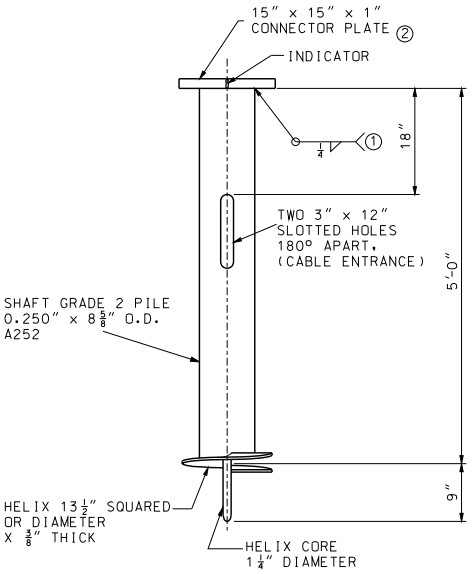

ELEVATION

DETAILS OF SCREW ANCHOR FOUNDATION

NOTES:

1. GRIND WELD AS NECESSARY TO CLEAR BOLT HEAD.
2. FOUNDATIONS SHALL BE INSTALLED SO THAT CONNECTOR PLATES ARE LEVEL PERPENDICULAR TO THE BRACKET ARM AND SLOPED FOR POLE RAKING PARALLEL TO THE BRACKET ARM.
3. AT THE OPTION OF THE CONTRACTOR THE CONCRETE FOUNDATION MAY BE PRECAST. IF PRECAST, THEY SHALL BE SET IN DRILLED HOLES 3 FEET IN DIAMETER AND 6 INCHES DEEPER THAN THE BOTTOM OF THE CONCRETE FOUNDATION. THE BOTTOM 6 INCHES OF THE HOLE AND THE REMAINING SPACE AROUND THE FOUNDATION SHALL BE BACKFILLED WITH WET TAMPED LIMESTONE SCREENINGS IN LAYERS NOT EXCEEDING 12 INCHES.

GENERAL NOTES:

ALL CLASSIFICATIONS ARE ASTM UNLESS OTHERWISE NOTED. SEE STANDARD SPECIFICATIONS FOR CLASSIFICATIONS NOT SHOWN.

ALL CONNECTOR PLATE AND CLOSURE PLATE THICKNESSES SHOWN ARE MINIMUM DIMENSIONS.

ALL ANCHOR BOLTS SHALL BE FULLY GALVANIZED 1" DIA. HIGH STRENGTH ANCHOR BOLTS.

ALL STEEL COMPONENTS SHALL BE HOT DIP GALVANIZED.

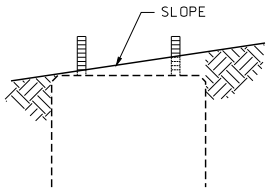

CONCRETE FOUNDATION EMBEDMENT

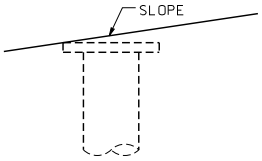

SCREW ANCHOR EMBEDMENT

MISSOURI HIGHWAYS AND TRANSPORTATION COMMISSION
105 WEST CAPITOL
JEFFERSON CITY, MO 65102
1-888-ASK-MODOT (1-888-275-6636)

STATE OF MISSOURI
KATHRYN PHILLIPS HARVEY
NUMBER PE-23751
PROFESSIONAL ENGINEER
THIS SHEET HAS BEEN SIGNED, SEALED AND DATED ELECTRONICALLY.

HIGHWAY LIGHTING

POLES, FOUNDATIONS AND APPURTENANCES FOR 30' MOUNTING HEIGHT

DATE EFFECTIVE: 02/01/2011	901.00Z	SHEET NO. 4 OF 4
DATE PREPARED: 12/8/2010		

IF A SEAL IS PRESENT ON THIS SHEET IT HAS BEEN ELECTRONICALLY SEALED AND DATED.

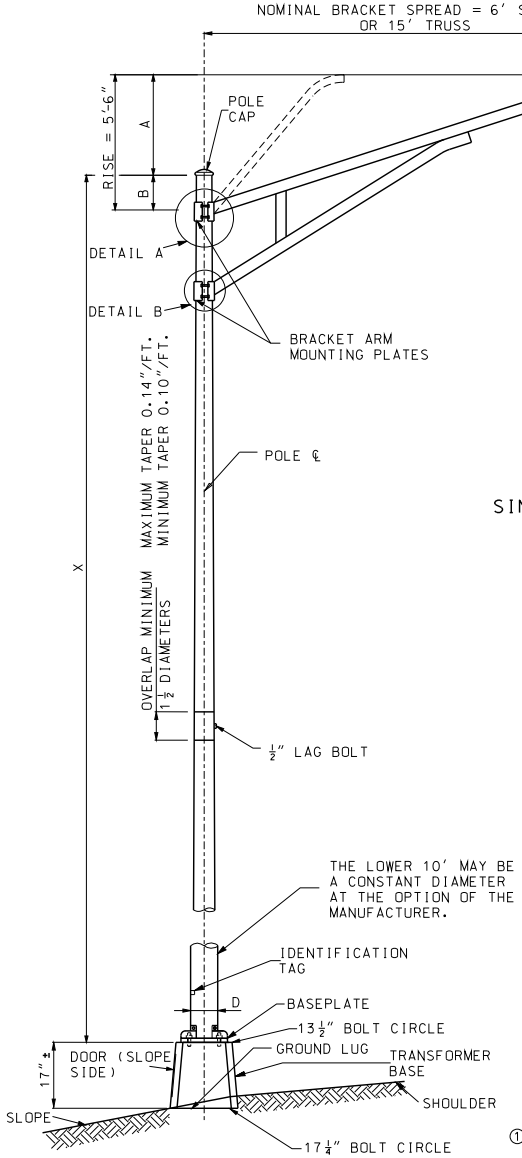

TYPE AT

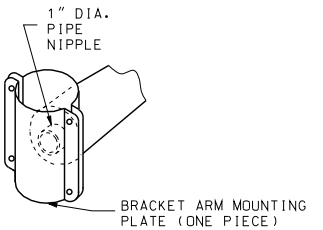

DETAIL A
SINGLE MOUNT AND UPPER MOUNT FOR TRUSSED

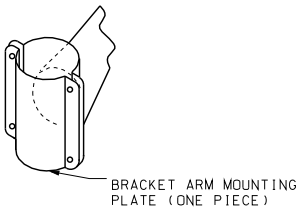

DETAIL B
LOWER MOUNT FOR TRUSSED

TYPICAL BRACKET ARM MOUNTING

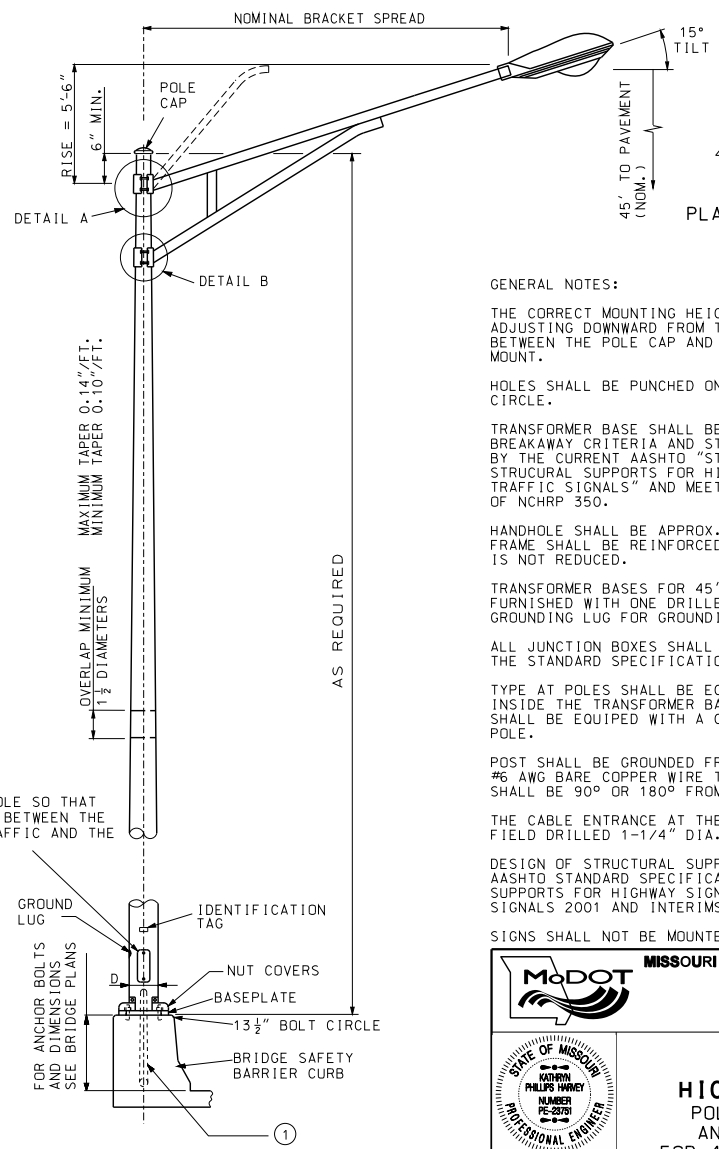

TYPE B

① RIGID CONDUIT SYSTEM. WIRES SHALL BE SPLICED AT FUSED CONNECTOR IN POLE BASE. IF CABLE-CONDUIT IS SPECIFIED, CUT CONDUIT AWAY FROM THE CABLES WHERE CABLE-CONDUIT ENTERS THE RIGID CONDUIT SYSTEM. (SEE DRAWING 901.02)

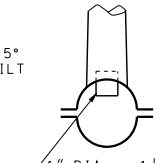

PLAN VIEW OF DETAIL A

GENERAL NOTES:

THE CORRECT MOUNTING HEIGHT WILL BE OBTAINED BY ADJUSTING DOWNWARD FROM THE 6" MINIMUM CLEARANCE BETWEEN THE POLE CAP AND THE TOP OF THE BRACKET ARM MOUNT.

HOLES SHALL BE PUNCHED ONLY FOR SPECIFIED BOLT CIRCLE.

TRANSFORMER BASE SHALL BE CERTIFIED AS MEETING THE BREAKAWAY CRITERIA AND STRUCTURAL REQUIREMENTS AS SET BY THE CURRENT AASHTO "STANDARD SPECIFICATIONS FOR STRUCURAL SUPPORTS FOR HIGHWAY SIGNS, LUMINARIES, AND TRAFFIC SIGNALS" AND MEET THE BREAKAWAY REQUIREMENTS OF NCHRP 350.

HANDHOLE SHALL BE APPROX. 4" X 6-1/2". HANDHOLE FRAME SHALL BE REINFORCED SO THAT THE POLE STRENGTH IS NOT REDUCED.

TRANSFORMER BASES FOR 45' MOUNTING HEIGHT SHALL BE FURNISHED WITH ONE DRILLED AND TAPPED HOLE AND GROUNDING LUG FOR GROUNDING EQUIPMENT.

ALL JUNCTION BOXES SHALL CONFORM TO SECTION 1062 OF THE STANDARD SPECIFICATIONS.

TYPE AT POLES SHALL BE EQUIPED WITH THE GROUNDING LUG INSIDE THE TRANSFORMER BASE. TYPE B AND MB POLES SHALL BE EQUIPED WITH A GROUNDING LUG INSIDE THE POLE.

POST SHALL BE GROUNDED FROM GROUND LUG IN POST WITH #6 AWG BARE COPPER WIRE TO CONDUIT SYSTEM. GROUND LUG SHALL BE 90° OR 180° FROM HANDHOLE.

THE CABLE ENTRANCE AT THE BRACKET ARM SHALL BE A FIELD DRILLED 1-1/4" DIA. HOLE.

DESIGN OF STRUCTURAL SUPPORTS SHALL COMPLY WITH AASHTO STANDARD SPECIFICATIONS FOR STRUCTURAL SUPPORTS FOR HIGHWAY SIGNS, LUMINAIRES AND TRAFFIC SIGNALS 2001 AND INTERIMS THROUGH 2003.

SIGNS SHALL NOT BE MOUNTED ON LIGHTING POLES.

MISSOURI HIGHWAYS AND TRANSPORTATION COMMISSION
105 WEST CAPITOL
JEFFERSON CITY, MO 65102
1-888-ASK-MODOT (1-888-275-6636)

STATE OF MISSOURI
KATHRYN PHILLIPS HARVEY
NUMBER PE-23751
PROFESSIONAL ENGINEER
THIS SHEET HAS BEEN SIGNED, SEALED AND DATED ELECTRONICALLY.

HIGHWAY LIGHTING
POLES, FOUNDATIONS AND APPURTENANCES FOR 45' MOUNTING HEIGHT

DATE EFFECTIVE:	02/01/2011	901.01AG	SHEET NO.
DATE PREPARED:	12/8/2010		1 OF 6

IF A SEAL IS PRESENT ON THIS SHEET IT HAS BEEN ELECTRONICALLY SEALED AND DATED.

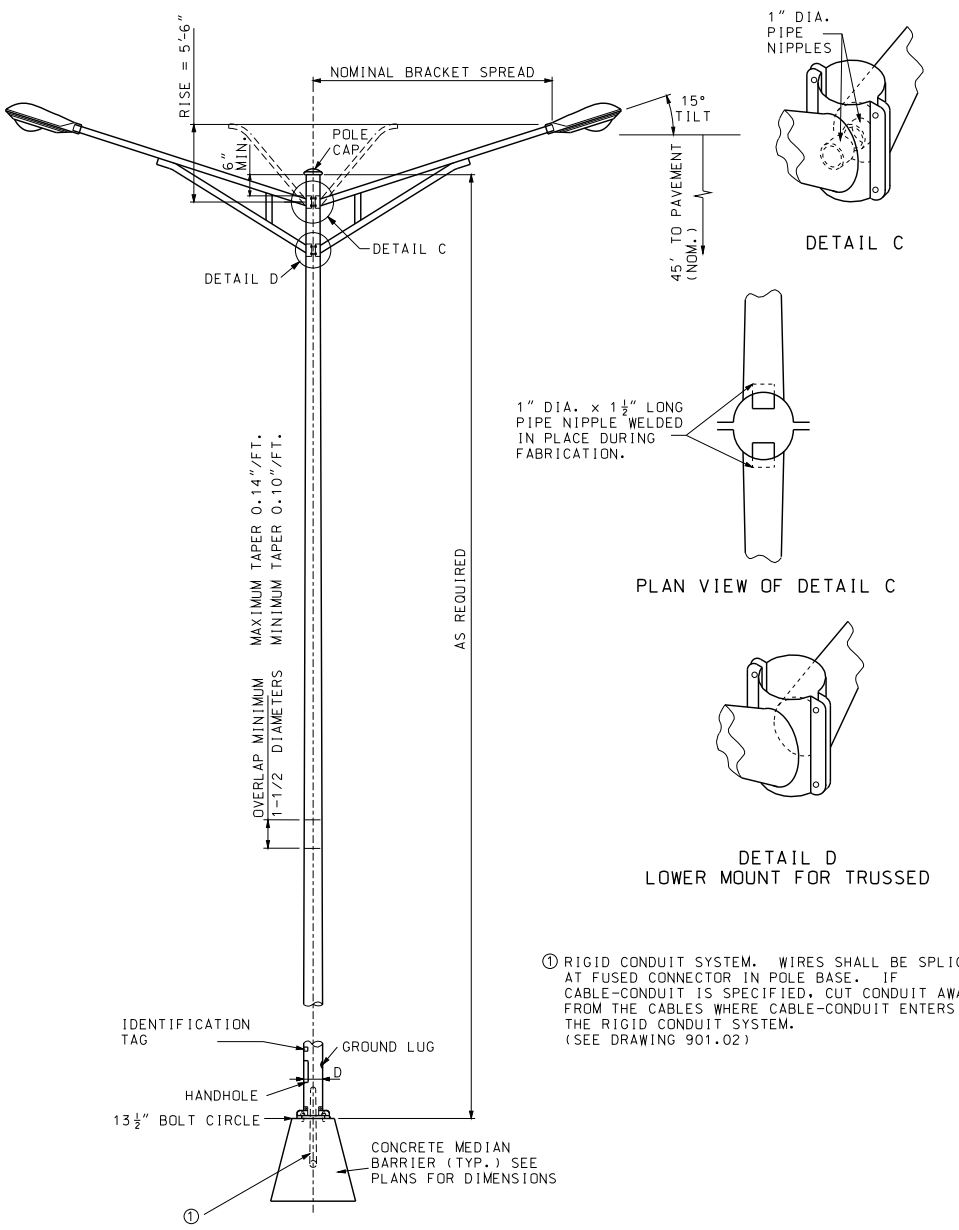

TYPE MB

DETAIL C

PLAN VIEW OF DETAIL C

DETAIL D
LOWER MOUNT FOR TRUSSED

① RIGID CONDUIT SYSTEM. WIRES SHALL BE SPLICED AT FUSED CONNECTOR IN POLE BASE. IF CABLE-CONDUIT IS SPECIFIED, CUT CONDUIT AWAY FROM THE CABLES WHERE CABLE-CONDUIT ENTERS THE RIGID CONDUIT SYSTEM. (SEE DRAWING 901.02)

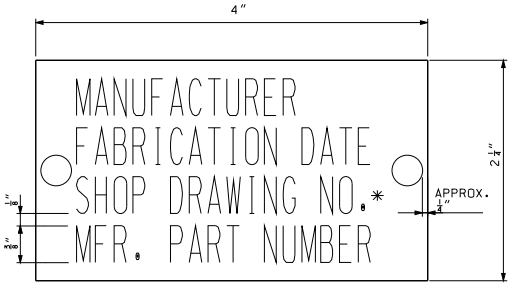

IDENTIFICATION TAG

ID TAG NOTE:

TAG SHALL BE ALUMINUM OR STAINLESS STEEL AND ATTACHED TO POLE USING TWO RIVETS OR STAINLESS STEEL DRIVE SCREWS. ID TAG HOLES SHALL BE DRILLED PRIOR TO GALVANIZING.

* INCLUDING REVISION

GENERAL NOTES:

THE CORRECT MOUNTING HEIGHT WILL BE OBTAINED BY ADJUSTING DOWNWARD FROM THE 6" MINIMUM CLEARANCE BETWEEN THE POLE CAP AND THE TOP OF THE BRACKET ARM MOUNT.

HOLES SHALL BE PUNCHED ONLY FOR SPECIFIED BOLT CIRCLE.

TRANSFORMER BASE SHALL BE CERTIFIED AS MEETING THE BREAKAWAY CRITERIA AND STRUCTURAL REQUIREMENTS AS SET BY THE CURRENT AASHTO "STANDARD SPECIFICATIONS FOR STRUCURAL SUPPORTS FOR HIGHWAY SIGNS, LUMINARIES, AND TRAFFIC SIGNALS" AND MEET THE BREAKAWAY REQUIREMENTS OF NCHRP 350.

HANDHOLE SHALL BE APPROX. 4" X 6-1/2". HANDHOLE FRAME SHALL BE REINFORCED SO THAT THE POLE STRENGTH IS NOT REDUCED.

TRANSFORMER BASES FOR 45' MOUNTING HEIGHT SHALL BE FURNISHED WITH ONE DRILLED AND TAPPED HOLE AND GROUNDING LUG FOR GROUNDING EQUIPMENT.

ALL JUNCTION BOXES SHALL CONFORM TO SECTION 1062 OF THE STANDARD SPECIFICATIONS.

TYPE AT POLES SHALL BE EQUIPED WITH THE GROUNDING LUG INSIDE THE TRANSFORMER BASE. TYPE B AND MB POLES SHALL BE EQUIPED WITH A GROUNDING LUG INSIDE THE POLE.

POST SHALL BE GROUNDED FROM GROUND LUG IN POST WITH #6 AWG BARE COPPER WIRE TO CONDUIT SYSTEM. GROUND LUG SHALL BE 90° OR 180° FROM HANDHOLE.

THE CABLE ENTRANCE AT THE BRACKET ARM SHALL BE A FIELD DRILLED 1-1/4" DIA. HOLE.

SIGNS SHALL NOT BE MOUNTED ON LIGHTING POLES.

IF A SEAL IS PRESENT ON THIS SHEET IT HAS BEEN ELECTRONICALLY SEALED AND DATED.

MISSOURI HIGHWAYS AND TRANSPORTATION COMMISSION
105 WEST CAPITOL
JEFFERSON CITY, MO 65102
1-888-ASK-MODOT (1-888-275-6636)

STATE OF MISSOURI
KATHRYN PHILLIPS HARVEY
NUMBER PE-23751
PROFESSIONAL ENGINEER
THIS SHEET HAS BEEN SIGNED, SEALED AND DATED ELECTRONICALLY.

HIGHWAY LIGHTING
POLES, FOUNDATIONS AND APPURTENANCES FOR 45' MOUNTING HEIGHT

DATE EFFECTIVE: 02/01/2011
DATE PREPARED: 12/8/2010

901.01AG

SHEET NO. 2 OF 6

TYPE AT POLE				
BRACKET SPREAD				6′ OR 15′
MAX. LUMINAIRE WEIGHT				60 LB
MAX. PROJECTED AREA				3.3 SQ. FT.
AT-45 DESIGN NO.	X	A	B	D * (NOMINAL)
1	50′	VAR.	6″ MIN.	10″
2	45′	VAR.	6″ MIN.	10″
3	40′	VAR.	6″ MIN.	10″
4	35′	VAR.	6″ MIN.	10″
5	30′	VAR.	6″ MIN.	10″

* THE MINIMUM ALTERNATE DIAMETER SHALL BE 10″ FOR A 50′ POLE, 9-1/2″ FOR A 45′ POLE, 9″ FOR A 40′ POLE, 8-1/2″ FOR A 35′ POLE AND 8″ FOR A 30′ POLE.

ANSI LAMPS			
FUSE RATING	DESIGNATION HPS	WATTS	INITIAL LUMENS
3A	S55	150	16,000
5A	S50	250	27,500
7A	S51	400	50,000
TYPE III MEDIUM DISTRIBUTION SEMI-CUTOFF UNLESS OTHERWISE SPECIFIED ON PLANS			

TYPE B POLE			
BRACKET SPREAD			6′ OR 15′
MAX. LUMINAIRE WEIGHT			60 LB
MAX. PROJECTED AREA			3.3 SQ. FT.
SINGLE BRACKET ARM			
LOCATION	BRACKET SPREAD	D NOM.	ANCHOR BOLT DIA.
BRIDGE SAFETY BARRIER CURB	6′	10″	1-1/4″
TRUSSED BRACKET ARM			
LOCATION	BRACKET SPREAD	D NOM.	ANCHOR BOLT DIA.
BRIDGE SAFETY BARRIER CURB	15′	10″	1-1/4″

TYPE MB POLE		
BRACKET SPREAD		6′ OR 15′
MAX. LUMINAIRE WEIGHT		60 LB
MAX. PROJECTED AREA		3.3 SQ. FT.
DOUBLE BRACKET ARM		
LOCATION	BRACKET SPREAD	D NOM.
MEDIAN BARRIER CURB	6′	10″
DOUBLE TRUSSED BRACKET ARM		
LOCATION	BRACKET SPREAD	D NOM.
MEDIAN BARRIER CURB	15′	10″

GENERAL NOTES:

THE CORRECT MOUNTING HEIGHT WILL BE OBTAINED BY ADJUSTING DOWNWARD FROM THE 6″ MINIMUM CLEARANCE BETWEEN THE POLE CAP AND THE TOP OF THE BRACKET ARM MOUNT.

HOLES SHALL BE PUNCHED ONLY FOR SPECIFIED BOLT CIRCLE.

TRANSFORMER BASE SHALL BE CERTIFIED AS MEETING THE BREAKAWAY CRITERIA AND STRUCTURAL REQUIREMENTS AS SET BY THE CURRENT AASHTO "STANDARD SPECIFICATIONS FOR STRUCURAL SUPPORTS FOR HIGHWAY SIGNS, LUMINARIES, AND TRAFFIC SIGNALS" AND MEET THE BREAKAWAY REQUIREMENTS OF NCHRP 350.

HANDHOLE SHALL BE APPROX. 4″ X 6½″. HANDHOLE FRAME SHALL BE REINFORCED SO THAT THE POLE STRENGTH IS NOT REDUCED.

TRANSFORMER BASES FOR 45′ MOUNTING HEIGHT SHALL BE FURNISHED WITH ONE DRILLED AND TAPPED HOLE AND GROUNDING LUG FOR GROUNDING EQUIPMENT.

ALL JUNCTION BOXES SHALL CONFORM TO SECTION 1062 OF THE STANDARD SPECIFICATIONS.

TYPE AT POLES SHALL BE EQUIPED WITH THE GROUNDING LUG INSIDE THE TRANSFORMER BASE. TYPE B AND MB POLES SHALL BE EQUIPED WITH A GROUNDING LUG INSIDE THE POLE.

POST SHALL BE GROUNDED FROM GROUND LUG IN POST WITH #6 AWG BARE COPPER WIRE TO CONDUIT SYSTEM. GROUND LUG SHALL BE 90° OR 180° FROM HANDHOLE.

THE CABLE ENTRANCE AT THE BRACKET ARM SHALL BE A FIELD DRILLED 1¼″ DIA. HOLE.

IF A SEAL IS PRESENT ON THIS SHEET IT HAS BEEN ELECTRONICALLY SEALED AND DATED.

MISSOURI HIGHWAYS AND TRANSPORTATION COMMISSION
105 WEST CAPITOL
JEFFERSON CITY, MO 65102
1-888-ASK-MODOT (1-888-275-6636)

STATE OF MISSOURI
KATHRYN PHILLIPS HARVEY
NUMBER PE-23751
PROFESSIONAL ENGINEER
THIS SHEET HAS BEEN SIGNED, SEALED AND DATED ELECTRONICALLY.

HIGHWAY LIGHTING
POLES, FOUNDATIONS AND APPURTENANCES FOR 45′ MOUNTING HEIGHT

DATE EFFECTIVE: 02/01/2011
DATE PREPARED: 12/8/2010

901.01AG

SHEET NO. 3 OF 6

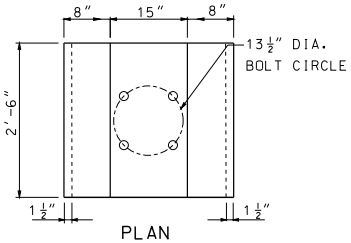

PLAN

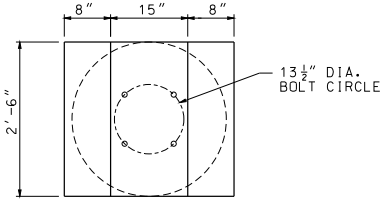

PLAN

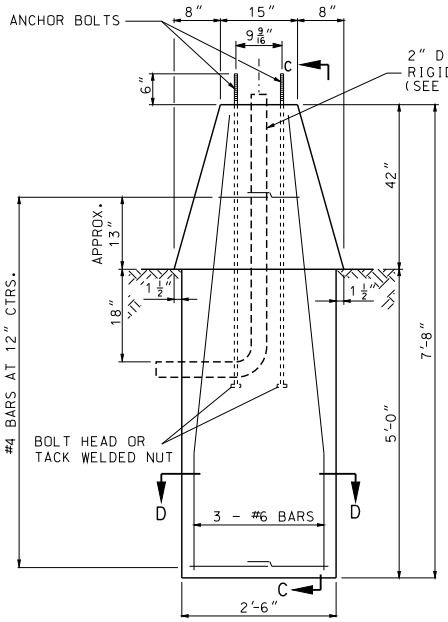

ELEVATION
ALTERNATE 1

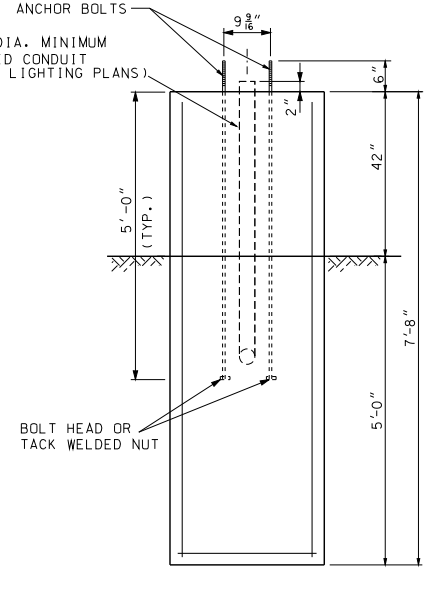

SECTION C-C

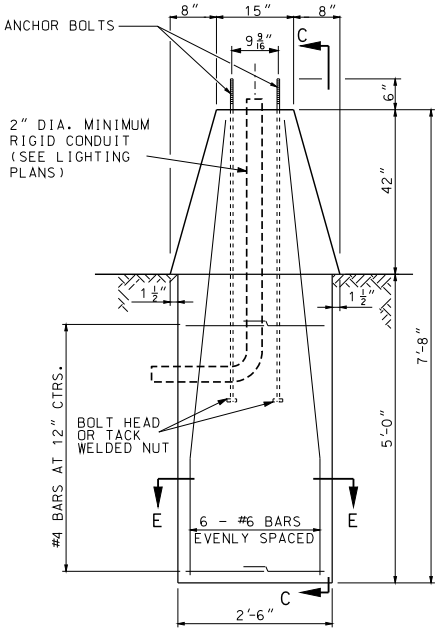

ELEVATION
ALTERNATE 2

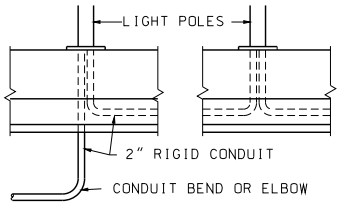

CONDUIT DETAIL FOR
ALTERNATE 1 & 2

GENERAL NOTES:

ALL FOUNDATIONS SHALL INCLUDE 4 ANCHOR BOLTS AND NUTS PLACED AS SHOWN.

ALL ANCHOR BOLTS SHALL BE FULLY GALVANIZED 1¼" DIAMETER HIGH STRENGTH ANCHOR BOLTS.

TOUNGE AND GROOVE REQUIRED ON MEDIAN BARRIER SECTION FOR TYPEMB POLES WHEN ADJACENT MEDIAN BARRIER IS PRECAST. FOR DETAILS, SEE STANDARD PLANS.

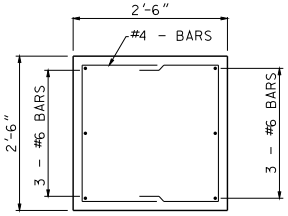

SECTION D-D

CONCRETE MEDIAN BARRIER AND FOUNDATION DESIGN FOR TYPE MB LIGHT POLE

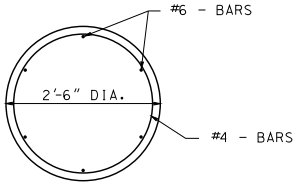

SECTION E-E

MISSOURI HIGHWAYS AND TRANSPORTATION COMMISSION
105 WEST CAPITOL
JEFFERSON CITY, MO 65102
1-888-ASK-MODOT (1-888-275-6636)

STATE OF MISSOURI
KATHRYN PHILLIPS HARVEY
NUMBER PE-23751
PROFESSIONAL ENGINEER
THIS SHEET HAS BEEN SIGNED, SEALED AND DATED ELECTRONICALLY.

HIGHWAY LIGHTING
POLES, FOUNDATIONS
AND APPURTENANCES
FOR 45' MOUNTING HEIGHT

DATE EFFECTIVE:	02/01/2011	901.01AG	SHEET NO. 4 OF 6
DATE PREPARED:	12/8/2010		

IF A SEAL IS PRESENT ON THIS SHEET IT HAS BEEN ELECTRONICALLY SEALED AND DATED.

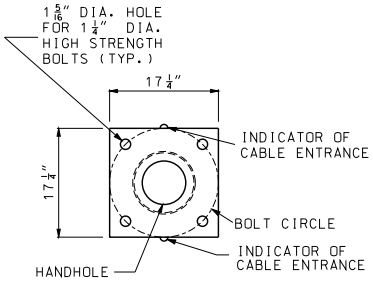

PLAN

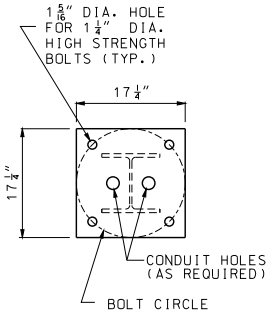

PLAN

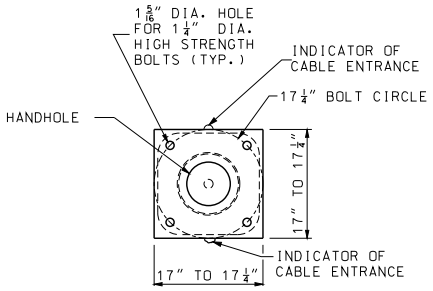

PLAN

NOTE:
DRIVE HOLES WILL BE PERMITTED PROVIDED THEY DO NOT CONFLICT WITH OR COMPROMISE THE STRUCTURAL INTEGRITY OF THE PLATE, THE WELD BETWEEN THE PLATE AND SHAFT, OR THE BOLT HOLES.

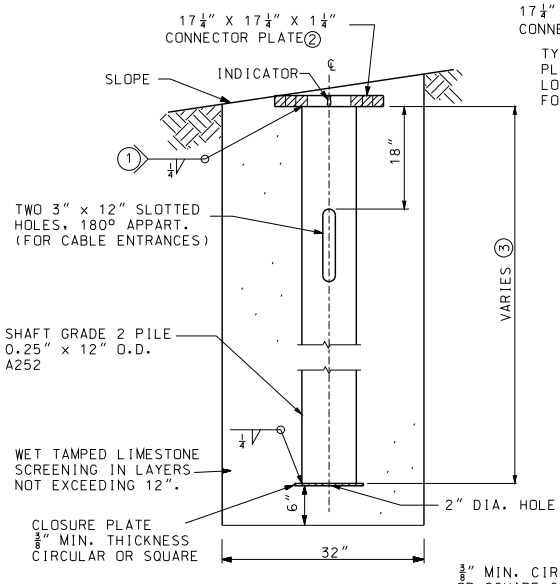

ELEVATION

DETAILS OF CIRCULAR STEEL PILE FOUNDATION

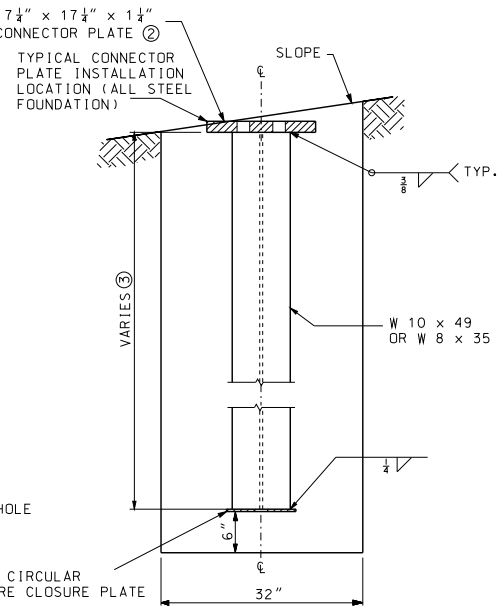

ELEVATION

DETAILS OF STEEL "H" PILE FOUNDATION

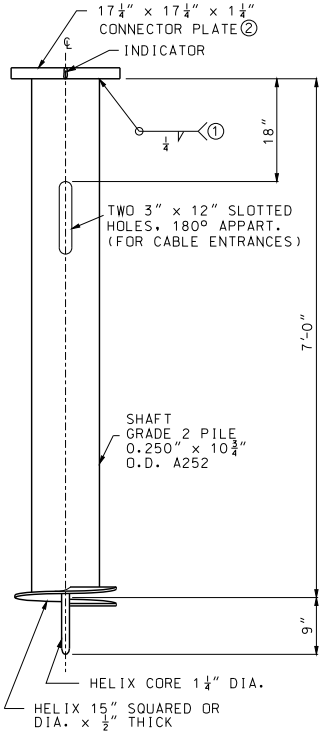

ELEVATION

DETAILS OF SCREW ANCHOR FOUNDATION

(1) GRIND WELD AS NECESSARY TO CLEAR BOLT HEAD.

(2) FOUNDATIONS SHALL BE INSTALLED SO THAT CONNECTOR PLATES ARE LEVEL PERPENDICULAR TO THE BRACKET ARM AND SLOPED FOR POLE RAKING PARALLEL TO THE BRACKET ARM.

(3) PILE LENGTHS FOR STEEL PILE FOUNDATIONS:

AT-45 DESIGN NO.	PILE LENGTH
4 & 5	8'-0"
2 & 3	9'-0"
1	10'-0"

GENERAL NOTES:

ALL CLASSIFICATIONS ARE ASTM UNLESS OTHERWISE NOTED. SEE STANDARD SPECIFICATIONS FOR CLASSIFICATIONS NOT SHOWN.

ALL BOLT CIRCLES FOR 45' MOUNTING HEIGHT SHALL BE 17 1/4".

ALL CONECTOR PLATE AND CLOSURE PLATE THICKNESSES SHOWN ARE MINIMUM DIMENSIONS.

ALL ANCHOR BOLTS SHALL BE FULLY GALVANIZED 1 1/4" DIAMETER HIGH STRENGTH ANCHOR BOLTS.

ALL STEEL COMPONENTS SHALL BE HOT DIP GALVANIZED.

MISSOURI HIGHWAYS AND TRANSPORTATION COMMISSION
105 WEST CAPITOL
JEFFERSON CITY, MO 65102
1-888-ASK-MODOT (1-888-275-6636)

STATE OF MISSOURI KATHRYN PHILLIPS HARVEY NUMBER PE-23751 PROFESSIONAL ENGINEER
THIS SHEET HAS BEEN SIGNED, SEALED AND DATED ELECTRONICALLY.

HIGHWAY LIGHTING

POLES, FOUNDATIONS AND APPURTENANCES FOR 45' MOUNTING HEIGHT

DATE EFFECTIVE:	02/01/2011	901.01AG	SHEET NO. 5 OF 6
DATE PREPARED:	12/8/2010		

IF A SEAL IS PRESENT ON THIS SHEET IT HAS BEEN ELECTRONICALLY SEALED AND DATED.

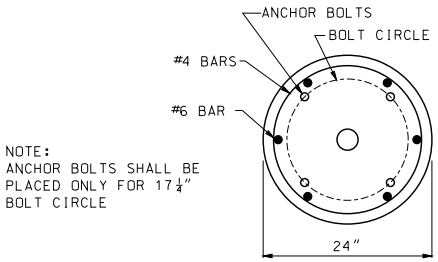

NOTE:
ANCHOR BOLTS SHALL BE PLACED ONLY FOR 17¼" BOLT CIRCLE

PLAN

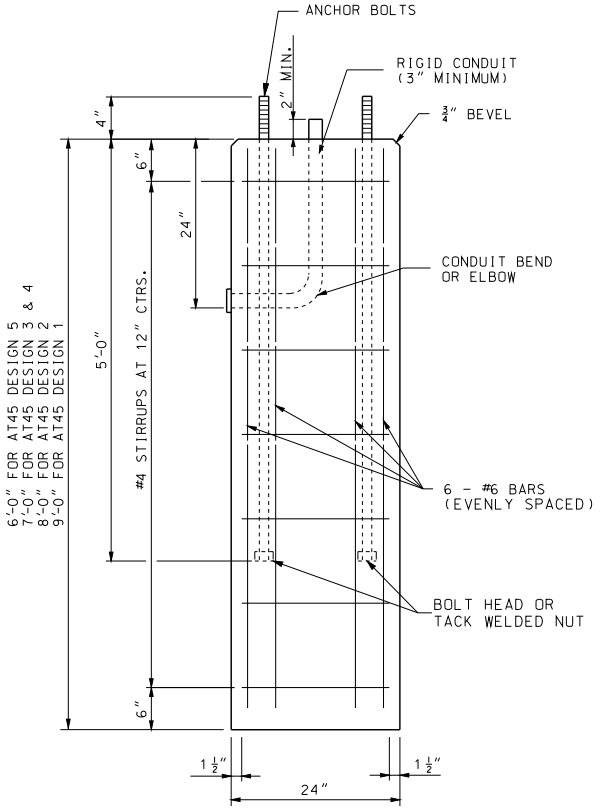

ELEVATION

DETAILS OF CONCRETE FOUNDATION ④

④ AT THE OPTION OF THE CONTRACTOR THE CONCRETE FOUNDATIONS MAY BE PRECAST. IF PRECAST, THEY SHALL BE SET IN DRILLED HOLES 3 FEET IN DIAMETER AND 6 INCHES DEEPER THAN THE BOTTOM OF THE CONCRETE FOUNDATION. THE BOTTOM 6 INCHES OF THE HOLE AND THE REMAINING SPACE AROUND THE FOUNDATION SHALL BE BACKFILLED WITH WET TAMPED LIMESTONE SCREENINGS IN LAYERS NOT EXCEEDING 12 INCHES.

QUANTITIES		
	CONC.	REINF.
HEIGHT	CU. YD.	LBS.
6'-0"	.70	80
7'-0"	.81	90
8'-0"	.93	104
9'-0"	1.05	120

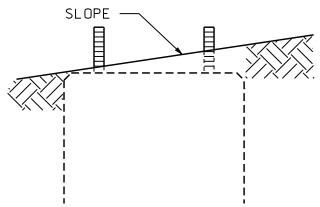

CONCRETE FOUNDATION EMBEDMENT

GENERAL NOTES:

ALL CLASSIFICATIONS ARE ASTM UNLESS OTHERWISE NOTED. SEE STANDARD SPECIFICATIONS FOR CLASSIFICATIONS NOT SHOWN.

ALL BOLT CIRCLES FOR 45' MOUNTING HEIGHT SHALL BE 17¼".

ALL CONECTOR PLATE AND CLOSURE PLATE THICKNESSES SHOWN ARE MINIMUM DIMENSIONS.

ALL ANCHOR BOLTS SHALL BE FULLY GALVANIZED 1¼" DIAMETER HIGH STRENGTH ANCHOR BOLTS.

ALL STEEL COMPONENTS SHALL BE HOT DIP GALVANIZED.

MISSOURI HIGHWAYS AND TRANSPORTATION COMMISSION
105 WEST CAPITOL
JEFFERSON CITY, MO 65102
1-888-ASK-MODOT (1-888-275-6636)

STATE OF MISSOURI
KATHRYN PHILLIPS HARVEY
NUMBER PE-23751
PROFESSIONAL ENGINEER
THIS SHEET HAS BEEN SIGNED, SEALED AND DATED ELECTRONICALLY.

HIGHWAY LIGHTING
POLES, FOUNDATIONS AND APPURTENANCES FOR 45' MOUNTING HEIGHT

DATE EFFECTIVE: 02/01/2011
DATE PREPARED: 12/8/2010

901.01AG

SHEET NO. 6 OF 6

IF A SEAL IS PRESENT ON THIS SHEET IT HAS BEEN ELECTRONICALLY SEALED AND DATED.

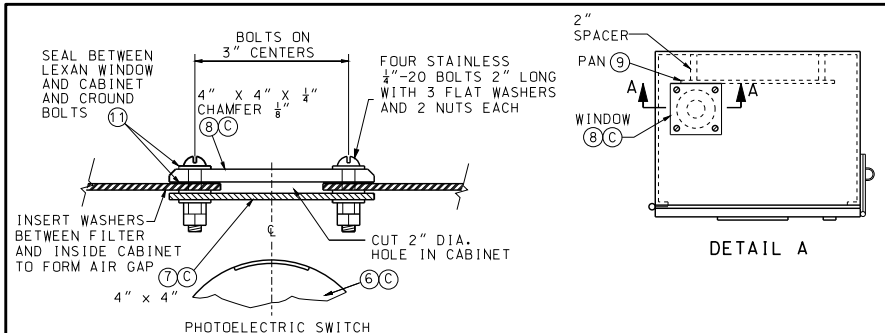

SECTION A-A
WINDOW DETAIL

DETAIL A

LIST OF MATERIALS	
ITEM	DESCRIPTION
1	#2 CORBIN LOCK
2	RIGID CONDUIT *
3	CLASS B CONCRETE, 0.4 C.Y.±
4	NEMA 4, DUST-TIGHT, WATERTIGHT, CABINET
5	GROUND ROD, 3/4" DIA. X 8' MIN.
6	PHOTOELECTRIC SWITCH AND SOCKET, 105/285 V., 1000-WATT
7	TRANSLUCENT, PLEXIGLASS FILTER #W2067, 1/8" THICK
8	CLEAR, LEXAN #9034 WINDOW, 1/4" THICK MIN.
9	MOUNTING PAN, 31 1/2" x 12" x 1/4" ALUMINUM OR STAINLESS STEEL
10	PLIABLE DUCT SEALANT
11	LIFETIME SILICONE CAULK
12	ANCHOR BOLTS, 5/8-11 x 14" LONG BOLTS, HOT DIP GALVANIZED, 4 REQUIRED, USE BOLT HEAD OR TACK WELDED NUT ON EMBEDDED END
13	WEATHERPROOF ADHESIVE LABEL, VINYL RAISED LETTERING (OR EQUIVALENT, SEE DETAIL)
	* - SEE PLANS

NOTES

(A) IF CABLE-CONDUIT IS SPECIFIED, THE CONDUIT SHALL BE CUT AWAY FROM CABINET BETWEEN PULL BOX AND CONTROL STATION.

(B) LIGHTING SYSTEM VOLTAGE AS SPECIFIED ON PLANS.

(C) PHOTOELECTRIC SWITCH BRACKETS MAY VARY. LOCATE CENTER OF WIDOW OVER CENTER OF PHOTOELECTRIC SWITCH.

(D) IF SUBSURFACE CONDITIONS EXIST WHICH PROHIBIT THE PLACEMENT OF THE GROUND ROD IN A VERTICAL POSITION, THE ROD MAY BE DRIVEN AT AN OBLIQUE ANGLE NOT TO EXCEED 45 DEGREES FROM VERTICAL OR BURIED IN A TRENCH AT LEAST 30 IN. DEEP. CONNECTION TO GROUND ROD SHALL BE CADWELDED.

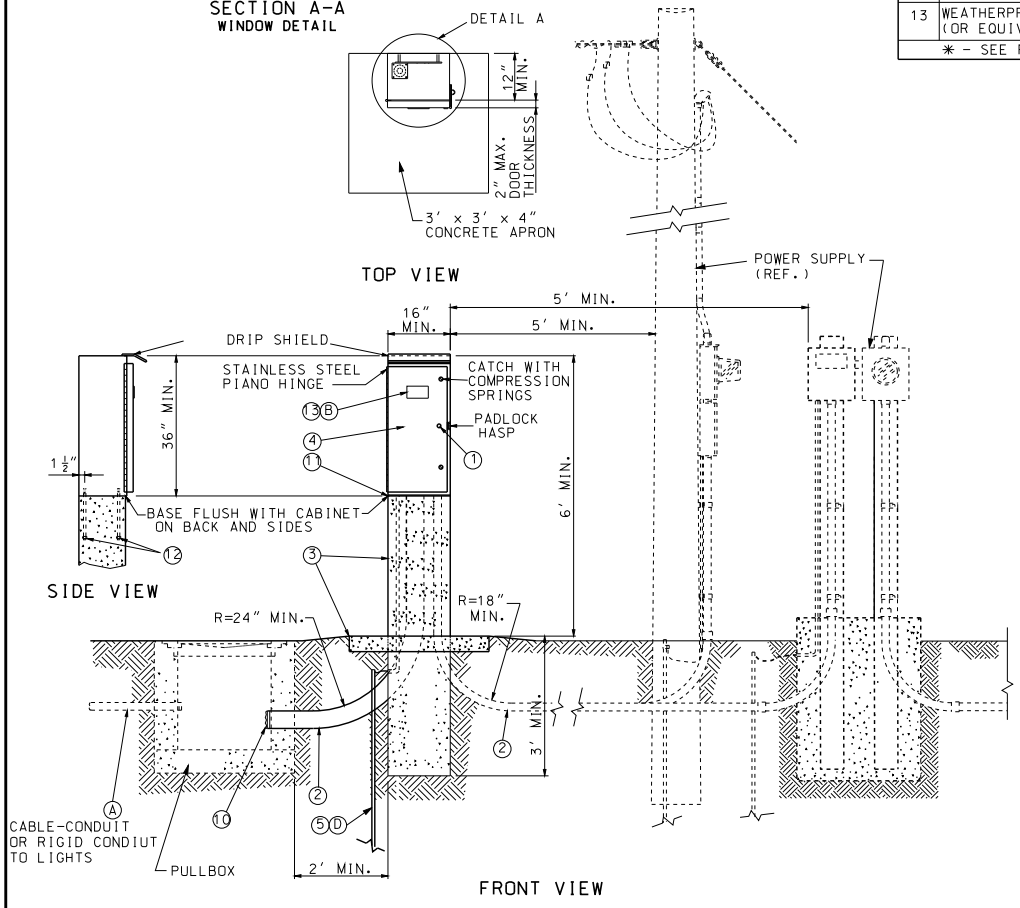

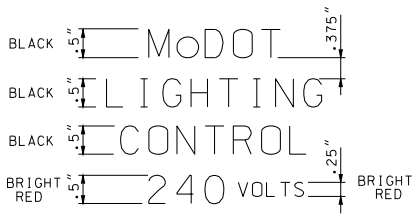

LABEL DETAIL
(240 VOLT) (13)(B)

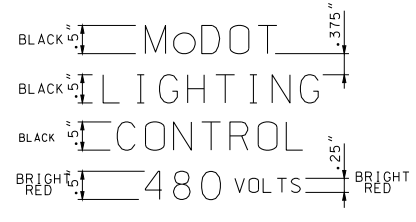

LABEL DETAIL
(480 VOLT) (13)(B)

GENERAL NOTES:

ALTERNATE CABINET DIMENSIONS WILL BE ALLOWED AS APPROVED BY THE ENGINEER. INTERIOR CABINET VOLUME SHALL BE EQUAL TO OR GREATER THAN THAT SHOWN ON PLANS AND PROPER CLEARANCES SHALL BE PROVIDED FOR ALL EQUIPMENT. CONCRETE BASE DIMENSIONS SHALL BE MODIFIED TO FIT THE CABINET SUPPLIER.

PLACEMENT OF ALL ITEMS SHALL BE APPROVED BY THE ENGINEER.

CABINET SHALL BE LOCATED AWAY FROM TRAFFIC. TOP MOUNT PHOTO CONTROL SHALL FACE AN OPEN SKY. SIDE MOUNT PHOTO CONTROL SHALL FACE NORTH.

SEE PLANS FOR CIRCUIT WIRING; MAXIMUM LOADING PER CIRCUIT IS 7,400 WATTS FOR 240 VOLT AND 11,000 WATTS FOR 480 VOLT.

SCHEMATIC DIAGRAM SHALL BE MOUNTED ON INSIDE OF CABINET DOOR.

THE UTILITY SHALL BE NOTIFIED IN WRITING 30 DAYS PRIOR TO DATE SERVICE WILL BE REQUIRED.

ALL OPENINGS IN CABINET SHALL BE COVERED AND SEALED WITH LIFETIME SILICONE CAULK.

ALL MATERIALS REQUIRED EXCLUDING REFERENCE ITEMS AS SHOWN ON DRAWING SHALL BE INCLUDED IN PRICE BID FOR CONTROL STATION.

MISSOURI HIGHWAYS AND TRANSPORTATION COMMISSION
105 WEST CAPITOL
JEFFERSON CITY, MO 65102
1-888-ASK-MODOT (1-888-275-6636)

STATE OF MISSOURI
EILEEN H. RACKERS
NUMBER PE-28336
PROFESSIONAL ENGINEER
THIS SHEET HAS BEEN SIGNED, SEALED AND DATED ELECTRONICALLY.

HIGHWAY LIGHTING
BASE MOUNTED
CONTROL STATION
240 V OR 480 V - 4 CIRCUIT

DATE EFFECTIVE:	04/01/2005	901.30F	SHEET NO.
DATE PREPARED:	9/14/2010		1 OF 2

IF A SEAL IS PRESENT ON THIS SHEET IT HAS BEEN ELECTRONICALLY SEALED AND DATED.

LIST OF MATERIALS	
ITEM	DESCRIPTION
1	SERVICE POLE 30' MIN.,CLASS 4 WOOD, CONTRACTOR PROVIDED, MoDOT OWNED*
2	#2 AWG MIN. CABLE, 600 VOLT *
3	SERVICE ENTRANCE HEAD
4	GUY CABLE, AS REQUIRED
5	RIGID CONDUIT, 2" MIN., WITH PREFORMED ELBOWS
6	LIGHTNING ARRESTER, VALVE TYPE, 2 POLE, 650 VOLT
7	METER SOCKET, 200 AMP, FOR SIGNALS
8	METER SOCKET, 200 AMP, FOR LIGHTING
9	LOCKING, RAINTIGHT, NEMA 4 SERVICE DISCONNECT BOX
10	INSULATED, GROUNDABLE NEUTRAL WIRE, 200 AMP MINIMUM
11	SIGNAL BREAKERS, SINGLE POLE, 40A MIN, TYPE A OR B *
12	LIGHTING BREAKER, 2 POLE, 240 VOLT, 100A, TYPE A OR B
13	1/2" METAL CONDUIT
14	#2 AWG MIN. GROUND WIRE
15	GROUND ROD, 3/4" x 8' MIN.
16	#8 AWG MIN. CABLE, 600 VOLT *
17	CLASS B CONCRETE, 0.92 C.Y.±
18	THREADED CONDUIT HUB WITH SEALING WASHERS
19	WEATHERPROOF ADHESIVE LABEL (LIGHTING), VINYL RAISED LETTERING (OR EQUIVALENT, SEE DETAIL)
20	WEATHERPROOF ADHESIVE LABEL (SIGNALS), VINYL RAISED LETTERING (OR EQUIVALENT, SEE DETAIL)
21	W6 x 9 OR W6 x 15 GALVANIZED POST
22	#2 AWG MIN. CABLE, 600 VOLT
23	RIGID CONDUIT, 2" MINIMUM
*	SEE PLANS

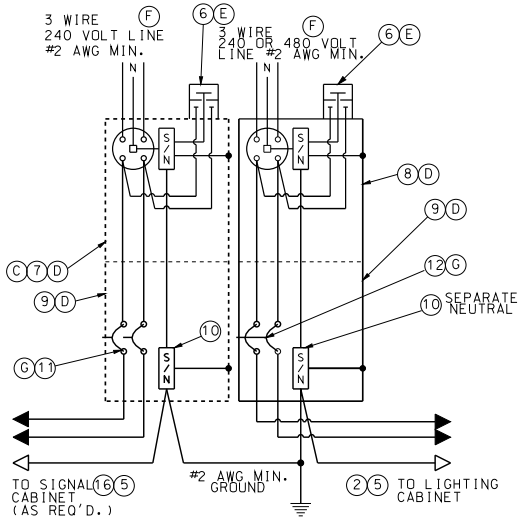

WIRING DIAGRAM

LIGHTING AND/OR SIGNALS

NOTES:

(A) SERVICE POLE SHALL BE GUYED WHEN SPAN OF OVERHEAD SERVICE WIRE EXCEEDS 50 FEET.

(B) INCREASE 1 FOOT FOR EACH 5 FEET ABOVE 30 FEET.

(C) SERVICE DISCONNECT BOXES AND METER BOXES SHALL BE ALUMINUM OR STAINLESS STEEL. ALL HARDWARE, HINGES, CATCHES, ETC. SHALL BE STAINLESS STEEL.METER SOCKET FOR SIGNALS OR LIGHTING AND OTHER EQUIPMENT AND MATERIALS SHALL BE U.L. APPROVED, AND CONFORM TO THE REQUIREMENTS OF THE UTILITY COMPANY OR MUNICIPALITY PROVIDING POWER.

(D) SCHEMATIC DIAGRAM SHALL BE MOUNTED ON INSIDE OF CABINET DOOR.

(E) UTILITY COMPANY SHALL DECIDE IF LIGHTNING ARRESTERS ARE TO BE CONNECTED ON THE LOAD OR LINE SIDE OF THE METER. THE UTILITY COMPANY SHALL ALSO DECIDE IF THE LIGHTNING ARRESTER IS TERMINATED IN THE METER OR DISCONNECT CABINET. IF TERMINATED IN THE DISCONNECT CABINET, IT SHALL BE INSTALLED ON THE DISCONNECT CABINET.

(F) LIGHTING SYSTEM VOLTAGE OF 240 VOLTS OR 480 VOLTS AS SHOWN ON THE PLANS.

(G) BREAKERS SHALL CONFORM TO SEC. 901.4 OF THE STANDARD SPECIFICATIONS.

(H) IF SUBSURFACE CONDITIONS EXIST WHICH PROHIBIT THE PLACEMENT OF THE GROUND ROD IN A VERTICAL POSITION, THE ROD MAY BE DRIVEN AT AN OBLIQUE ANGLE NOT TO EXCEED 45 DEGREES FROM VERTICAL OR BURIED IN A TRENCH AT LEAST 30 IN. DEEP. CONNECTION TO GROUND ROD SHALL BE CADWELDED.

GENERAL NOTES:

FOR CABLE TYPES AND INSTALLATION, SEE STANDARD SPECIFICATIONS.

THE POWER SUPPLY ASSEMBLY TYPE IS SHOWN ON THE PLANS OR IS DESIGNATED IN THE CONTRACT.

THE UTILITY COMPANY SHALL BE NOTIFIED IN WRITING 30 DAYS PRIOR TO DATE SERVICE WILL BE REQUIRED.

WHERE SIGNAL OR LIGHTING POWER ONLY IS DESIGNATED, OMIT ITEMS NOT REQUIRED.

ALL OPENINGS IN ANY SERVICE BOX OR METER BOX SHALL BE COVERED AND SEALED WITH LIFETIME SILICONE CAULK.

ALL MATERIALS REQUIRED AS SHOWN ON DRAWING, INCLUDING CABLE AND CONDUIT FROM POWER SUPPLY ASSEMBLY TO UTILITY COMPANY FACILITIES, SHALL BE INCLUDED IN UNIT BID PRICE FOR POWER SUPPLY ASSEMBLY.

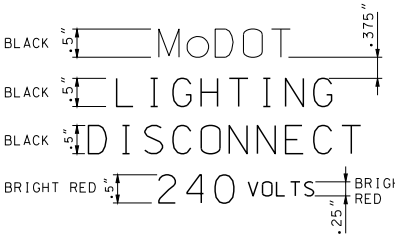

LABEL DETAIL (19) (240 VOLT) (F)

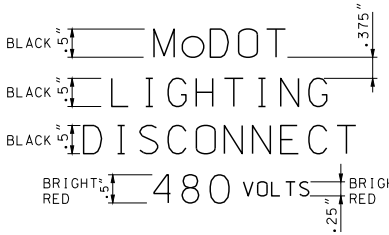

LABEL DETAIL (19) (480 VOLT) (F)

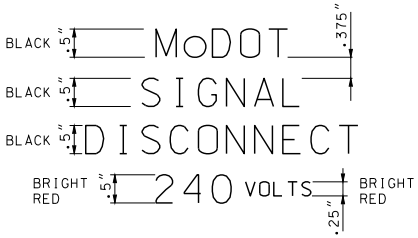

LABEL DETAIL (20)

MISSOURI HIGHWAYS AND TRANSPORTATION COMMISSION
105 WEST CAPITOL
JEFFERSON CITY, MO 65102
1-888-ASK-MODOT (1-888-275-6636)

STATE OF MISSOURI
EILEEN H. RACKERS
NUMBER PE-28336
PROFESSIONAL ENGINEER
THIS SHEET HAS BEEN SIGNED, SEALED AND DATED ELECTRONICALLY.

HIGHWAY LIGHTING
POWER SUPPLY ASSEMBLY
SECONDARY SERVICE

DATE EFFECTIVE: 04/01/2002
DATE PREPARED: 4/1/2010

901.80D

SHEET NO. 1 OF 2

IF A SEAL IS PRESENT ON THIS SHEET IT HAS BEEN ELECTRONICALLY SEALED AND DATED.

PEDESTAL OR NEW STATE-OWNED POLE TO BE SET WITHIN 2' TO 4' OF RIGHT-OF-WAY LINE.

ALL SERVICE POWER SUPPLY ASSEMBLIES ARE TO BE LOCATED ON STATE PROPERTY.

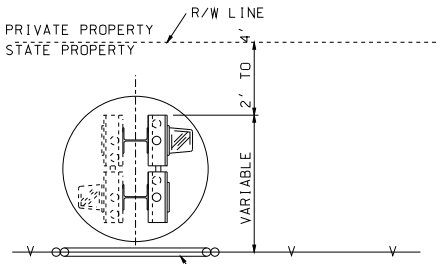

TOP VIEW

IF FENCE BLOCKS ACCESS TO POWER SUPPLY A 3' MIN. LOCKING GATE IS TO BE INSTALLED. (NO DIRECT PAY)

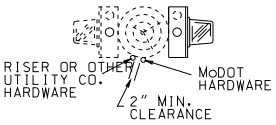

SECTION A-A

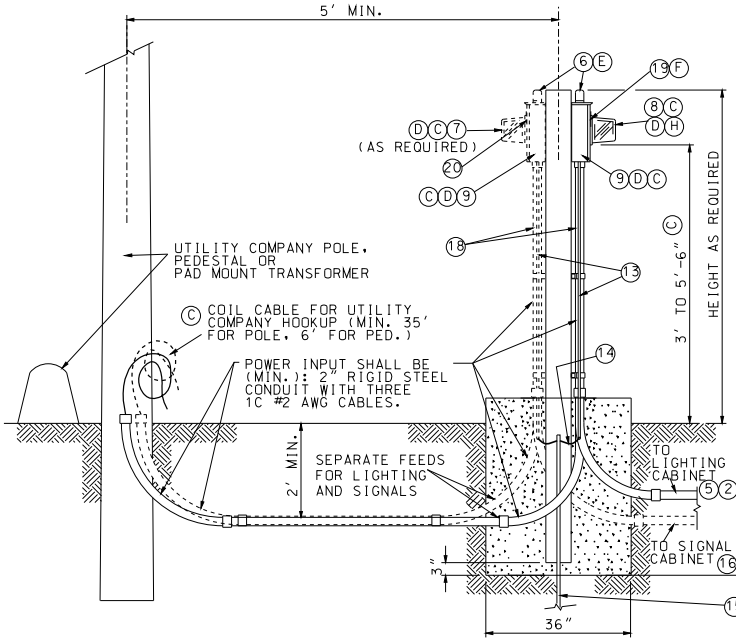

SIDE VIEW

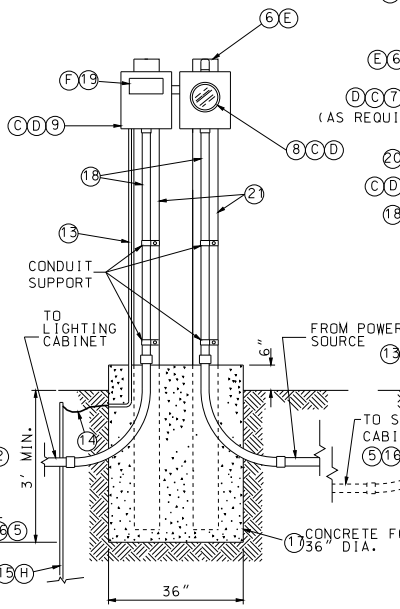

FRONT VIEW

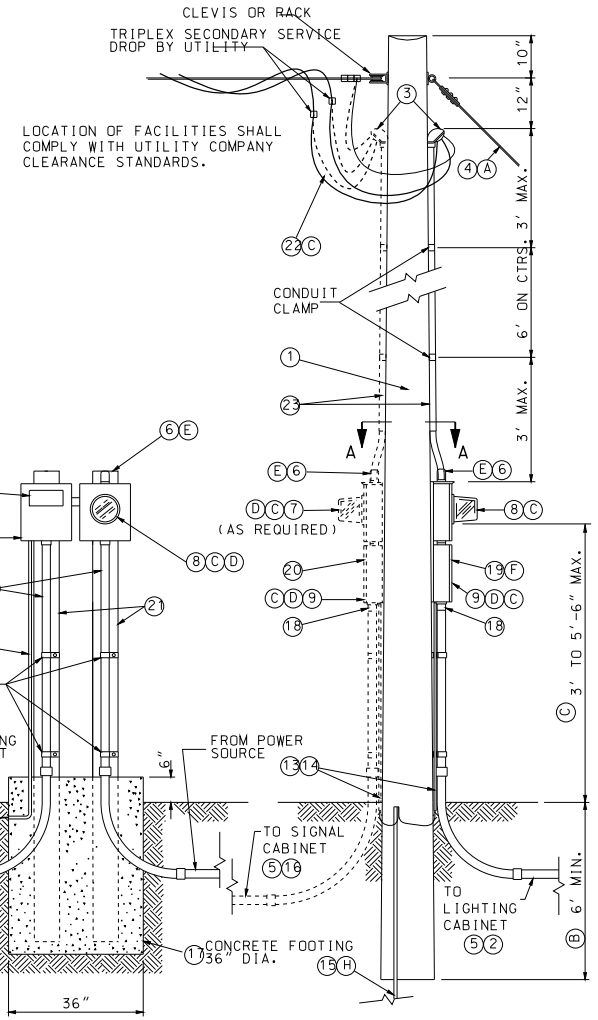

TYPE 1 (POLE) OVERHEAD SERVICE

TYPE 2 (PEDESTAL) UNDERGROUND SERVICE

NOTE:
CABLE AND CONDUIT FROM POWER SUPPLY ASSEMBLY TO UTILITY COMPANY FACILITIES SHALL BE INCLUDED IN PRICE BID FOR POWER SUPPLY ASSEMBLY.

IF A SEAL IS PRESENT ON THIS SHEET IT HAS BEEN ELECTRONICALLY SEALED AND DATED.

MISSOURI HIGHWAYS AND TRANSPORTATION COMMISSION
105 WEST CAPITOL
JEFFERSON CITY, MO 65102
1-888-ASK-MODOT (1-888-275-6636)

STATE OF MISSOURI EILEEN H. RACKERS NUMBER PE-28336 PROFESSIONAL ENGINEER
THIS SHEET HAS BEEN SIGNED, SEALED AND DATED ELECTRONICALLY.

HIGHWAY LIGHTING
POWER SUPPLY ASSEMBLY
SECONDARY SERVICE

DATE EFFECTIVE: 04/01/2002	901.80D	SHEET NO. 2 OF 2
DATE PREPARED: 5/19/2010		

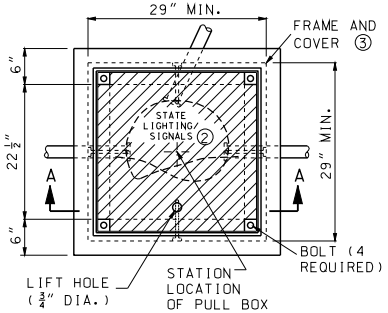

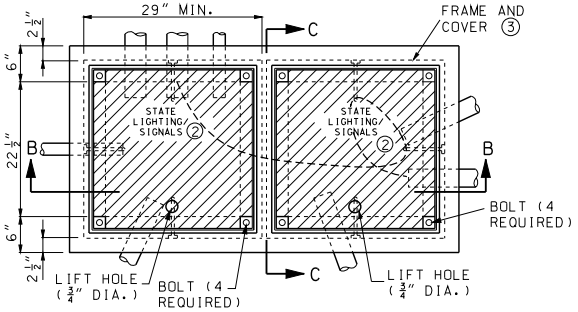

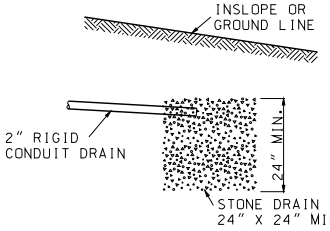

POROUS BACKFILL MATERIAL
TYPE A

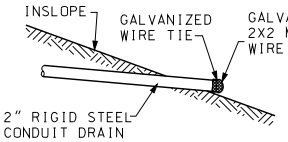

TYPE B

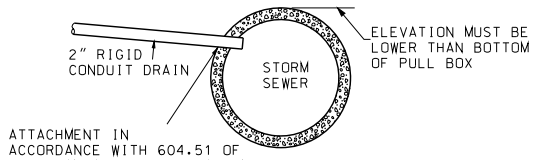

TYPE C

TYPE II DRAIN OUTLET DETAILS

① ALL METAL CONDUITS SHALL BE ELECTRICALLY BONDED BY A GROUND BUSHING AND #6 AWG BARE COPPER WIRE. FOR PVC CONDUIT, ALL GROUND WIRES SHALL BE CONNECTED.

② SIGNAL PULL BOXES SHALL BE EMBOSSED "STATE SIGNALS" AND LIGHTING PULL BOXES "STATE LIGHTING."

③ PULL BOX FRAMES AND COVERS SHALL BE CAST IRON AND THE FOLLOWING MINIMUM DIMENSIONS:

FRAME SIZE:	29" x 29"
FRAME HEIGHT:	4¼"
OPENING SIZE:	22½" x 22½"
FRAME WEIGHT:	120 LBS.
COVER SIZE:	22⅝" x 22⅝"
COVER THICKNESS:	¾"
COVER WEIGHT:	140 LBS.

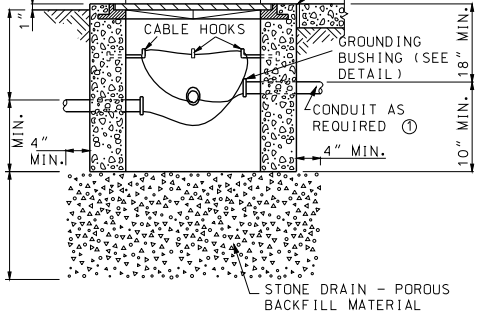

SECTION A-A
TYPE I DRAIN TYPE

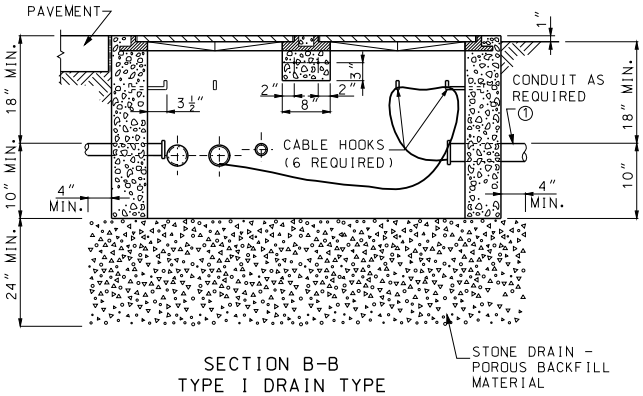

SECTION B-B
TYPE I DRAIN TYPE

GROUNDING BUSHING (TYP) ①

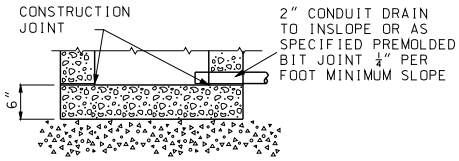

SECTION A-A
TYPE II DRAIN TYPE
(SEE DRAIN OUTLET DETAILS)
(SECTION ABOVE BREAK APPLICABLE TO TYPE I DRAIN)

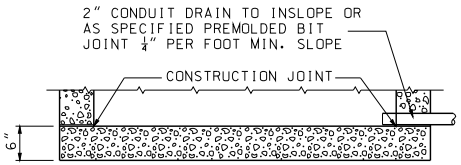

SECTION B-B
TYPE II DRAIN TYPE
(SEE DRAIN OUTLET DETAILS)
(SECTION ABOVE BREAK APPLICABLE TO TYPE I DRAIN)

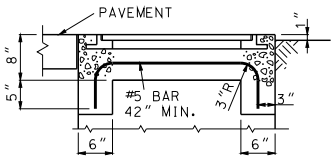

SECTION C-C

STANDARD CONCRETE PULL BOX

DOUBLE CONCRETE PULL BOX, TYPE A

GENERAL NOTES:

ALL DIMENSIONS SHOWN ARE NOMINAL.

BOLT CLEANOUT DETAIL SHALL BE APPROVED BY ENGINEER.

PAVEMENT AND SUBGRADE SHALL BE AS SHOWN ON PLANS.

STONE DRAIN MATERIAL SHALL CONFORM TO SECTION 1009 OF THE STANDARD SPECIFICATIONS.

MISSOURI HIGHWAYS AND TRANSPORTATION COMMISSION
105 WEST CAPITOL
JEFFERSON CITY, MO 65102
1-888-ASK-MODOT (1-888-275-6636)

STATE OF MISSOURI
KATHRYN PHILLIPS HARVEY
NUMBER PE-23751
PROFESSIONAL ENGINEER
THIS SHEET HAS BEEN SIGNED, SEALED AND DATED ELECTRONICALLY.

TRAFFIC SIGNALS
CONCRETE PULL BOXES

DATE EFFECTIVE:	11/01/2010	902.20G	SHEET NO. 1 OF 3
DATE PREPARED:	9/3/2010		

IF A SEAL IS PRESENT ON THIS SHEET IT HAS BEEN ELECTRONICALLY SEALED AND DATED.

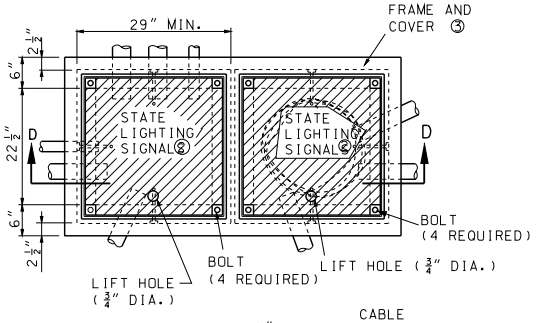

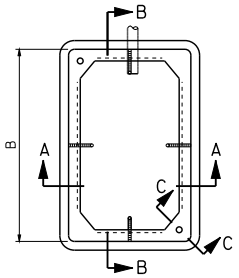

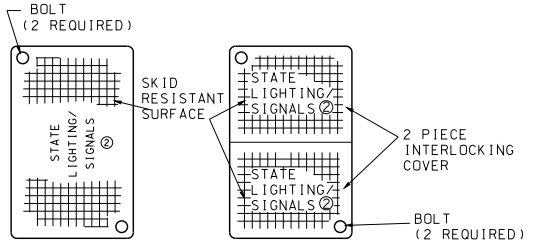

CLASS 1 OR 2 CLASS 3

PREFORMED PULL BOX COVER

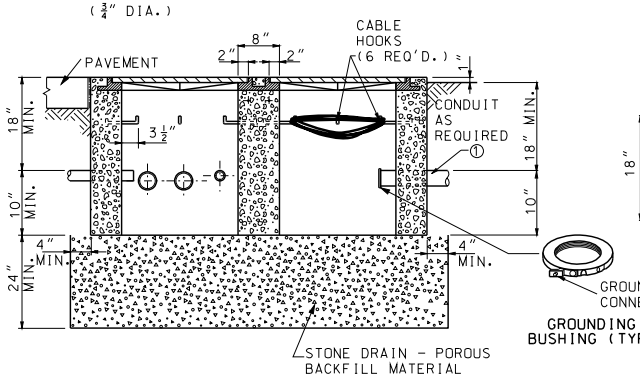

SECTION D-D
TYPE I DRAIN TYPE

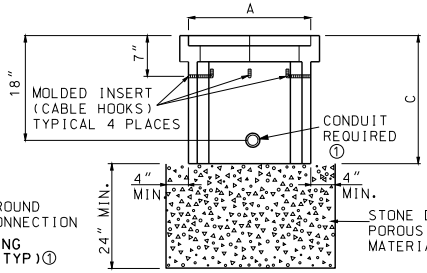

SECTION A-A
TYPE I DRAIN TYPE

NUMBER OF ENTERING CONDUCTORS	CLASS	PREFORMED PULL BOX MINIMUM DIMENSIONS		
		A	B	C
< 23	1	17"	30"	22"
23 - 68	2	24"	36"	24"
> 68	3	30"	48"	36"

① ALL METAL CONDUITS SHALL BE ELECTRICALLY BONDED BY A GROUND BUSHING AND #6 AWG BARE COPPER WIRE. FOR PVC CONDUIT, ALL GROUND WIRES SHALL BE CONNECTED.

② SIGNAL PULL BOXES SHALL BE EMBOSSED "STATE SIGNALS" AND LIGHTING PULL BOXES "STATE LIGHTING."

③ PULL BOX FRAMES AND COVERS SHALL BE CAST IRON AND THE FOLLOWING MINIMUM DIMENSIONS:

FRAME SIZE:	29" X 29"
FRAME HEIGHT:	4¼"
OPENING SIZE:	22½" x 22½"
FRAME WEIGHT:	120 LBS.
COVER SIZE:	22⅝" x 22⅝"
COVER THICKNESS:	¾"
COVER WEIGHT:	140 LBS.

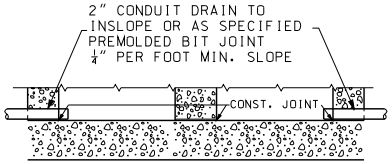

TYPE II DRAIN TYPE
(SEE DRAIN OUTLET DETAILS)
(SECTION ABOVE BREAK APPLICABLE TO TYPE I DRAIN.)

DOUBLE CONCRETE PULL BOX, TYPE B

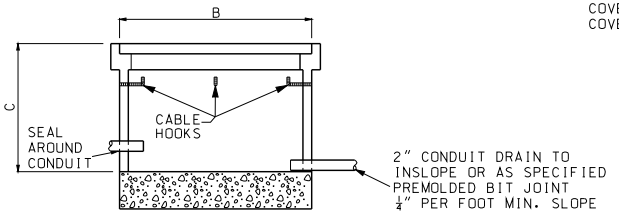

SECTION B-B
TYPE II DRAIN TYPE

PREFORMED PULL BOX

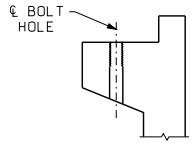

SECTION C-C
TYPICAL BOLT CLEANOUT

GENERAL NOTES:

IF AN EXTENSION IS USED WITH A PREFORMED BOX, THE LIP OF THE EXTENSION MAY BE INTERIOR OR EXTERIOR. THE EXTENSION SHALL BE COMPATIBLE AND FROM THE SAME MANUFACTURER.

IF PREFORMED PULL BOXES ARE SPECIFIED, THE CONTRACTOR MAY USE THE STANDARD CONCRETE PULL BOX IN LIEU OF THE CLASS 1 OR 2 PREFORMED PULL BOX OR THE DOUBLE CONCRETE PULL BOX, TYPE A, IN LIEU OF THE CLASS 3 PREFORMED PULL BOXES.

MISSOURI HIGHWAYS AND TRANSPORTATION COMMISSION
105 WEST CAPITOL
JEFFERSON CITY, MO 65102
1-888-ASK-MODOT (1-888-275-6636)

STATE OF MISSOURI
KATHRYN PHILLIPS HARVEY
NUMBER PE-23751
PROFESSIONAL ENGINEER
THIS SHEET HAS BEEN SIGNED, SEALED AND DATED ELECTRONICALLY.

TRAFFIC SIGNALS
CONCRETE AND PREFORMED PULL BOXES

DATE EFFECTIVE: 11/01/2010
DATE PREPARED: 9/3/2010

902.20G

SHEET NO. 2 OF 3

IF A SEAL IS PRESENT ON THIS SHEET IT HAS BEEN ELECTRONICALLY SEALED AND DATED.

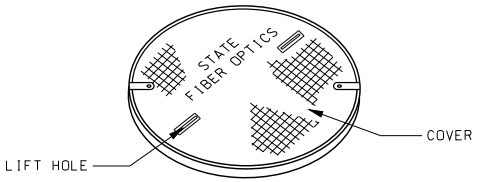

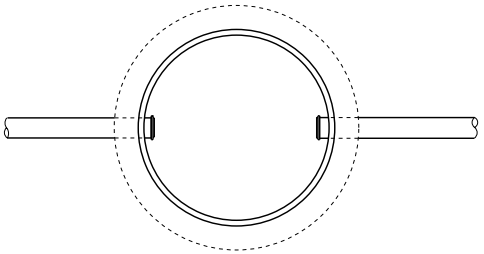

PLAN

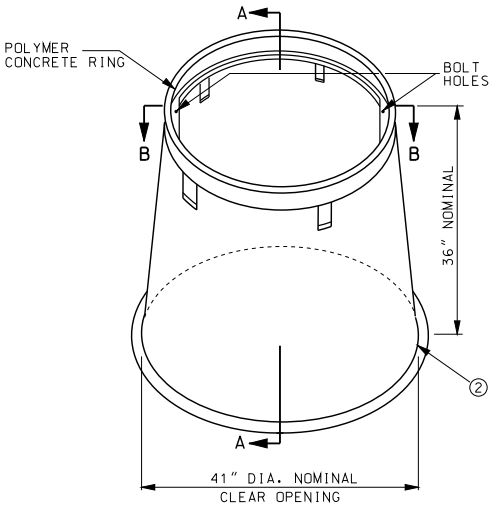

CIRCULAR PULL BOX
CLASS 5

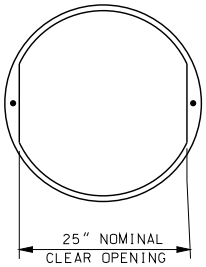

SECTION B-B

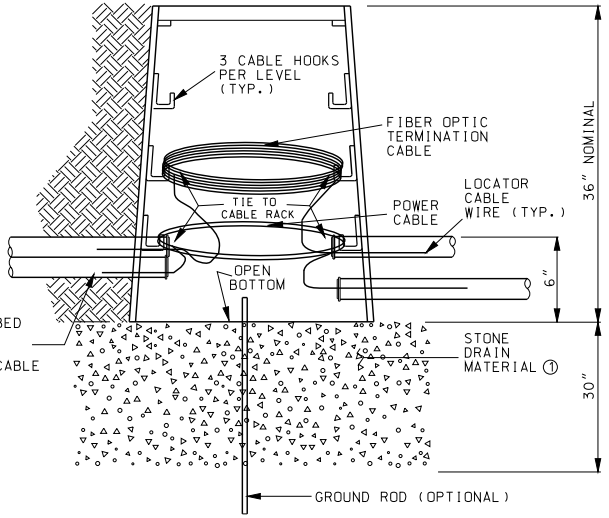

SECTION A-A
TYPE I DRAIN TYPE

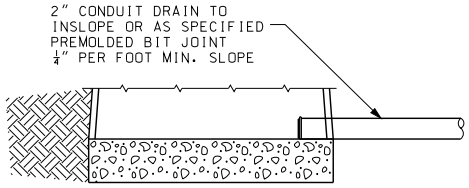

TYPE II DRAIN TYPE
(SEE DRAIN OUTLET DETAILS)
(SECTION ABOVE BREAK APPLICABLE TO TYPE I DRAIN.)

1. AGGREGATE SHALL BE TYPE 1 CONFORMING TO SEC 1007.
2. BOX SHALL BE OF A FLARE DESIGN AND HAVE A LIP FOR STABILIZATION.

GENERAL NOTES:

A MINIMUM OF NINE HOOKS, INSTALLED IN THREE LEVELS, SHALL BE INCLUDED WITH EACH PULL BOX.

IF SUBSURFACE CONDITIONS EXIST WHICH PROHIBIT THE PLACEMENT OF THE GROUND ROD IN A VERTICAL POSITION, THE ROD MAY BE DRIVEN AT AN OBLIQUE ANGLE NOT TO EXCEED 45 DEGREES FROM VERTICAL OR BURIED IN A TRENCH AT LEAST 30 IN. DEEP. CONNECTION TO GROUND ROD SHALL BE CADWELDED.

THE CIRCULAR PULL BOX COVER SHOULD BE SIZED TO FIT A BOX WITH A CLEAR OPENING OF 25".

MISSOURI HIGHWAYS AND TRANSPORTATION COMMISSION
105 WEST CAPITOL
JEFFERSON CITY, MO 65102
1-888-ASK-MODOT (1-888-275-6636)

STATE OF MISSOURI
KATHRYN PHILLIPS HARVEY
NUMBER PE-23751
PROFESSIONAL ENGINEER
THIS SHEET HAS BEEN SIGNED, SEALED AND DATED ELECTRONICALLY.

TRAFFIC SIGNALS
CONCRETE AND PREFORMED PULL BOXES

DATE EFFECTIVE:	11/01/2010	902.20G	SHEET NO. 3 OF 3
DATE PREPARED:	9/3/2010		

IF A SEAL IS PRESENT ON THIS SHEET IT HAS BEEN ELECTRONICALLY SEALED AND DATED.

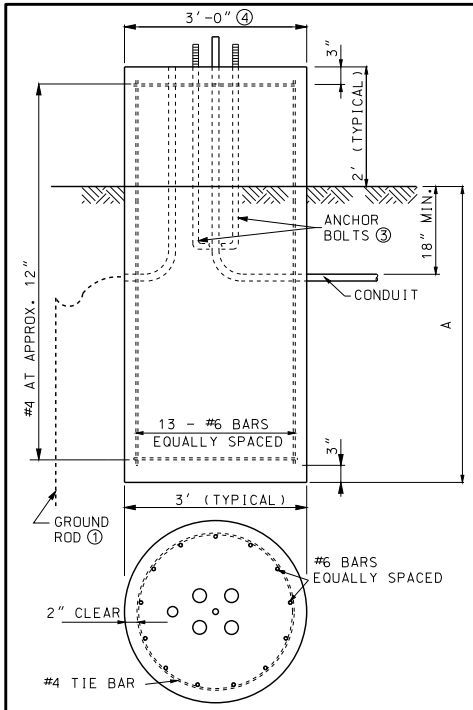

TYPE A (FLAT GROUND)

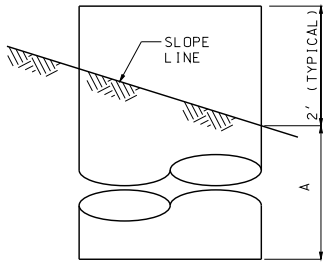

TYPE A (FILL)

(FOR ADDITIONAL DETAILS SEE TYPE A FLAT GROUND)

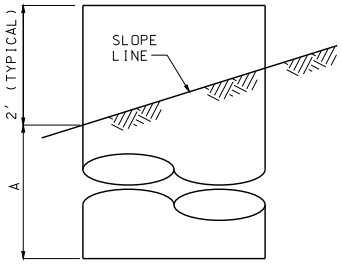

TYPE A (CUT)

(FOR ADDITIONAL DETAILS SEE TYPE A FLAT GROUND)

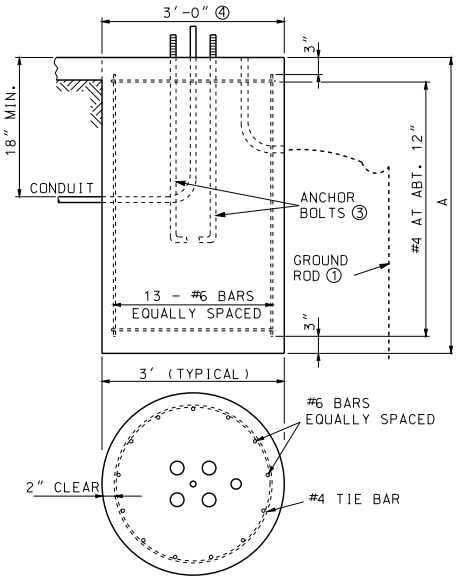

TYPE F

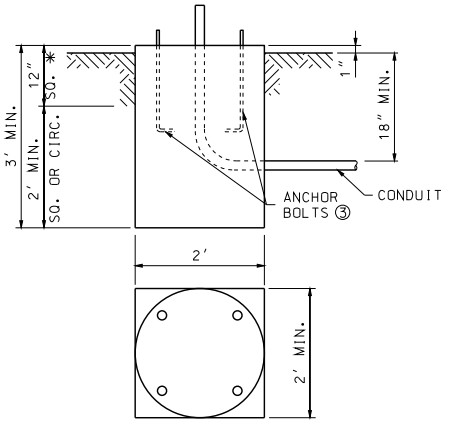

✳ SURFACE OF BASE TO BE CONSTRUCTED SQUARE FOR A DEPTH OF 12″.

TYPE C

POST BASES

POST BASES		
POST TYPE	ARM LENGTH (FEET) ⑤	BASE TYPE ⑥
C OR CL	15 - 25	A-9 OR F-9
C OR CL	30 - 35	A-9.5 OR F-9.5
C OR CL	40 - 55	A-10.5 OR F-10.5
B OR BL	15 - 25	A-10 OR F-10
B OR BL	30 - 35	A-11 OR F-11
B OR BL	40 - 55	A-12 OR F-12

STEEL AND CONCRETE REQUIREMENTS FOR POST BASES ⑨				
BASES		#6 STEEL BAR		CONC. C.Y.
TYPE	A ⑦	LENGTH	WEIGHT LBS.	
A-9	9′-0″	10′-6″	270	2.88
A-9.5	9′-6″	11′-0″	280	3.01
A-10	10′-0″	11′-6″	300	3.14
A-10.5	10′-6″	12′-0″	310	3.27
A-11	11′-0″	12′-6″	320	3.40
A-12	12′-0″	13′-6″	350	3.67
F-9	9′-0″	8′-6″	230	2.36
F-9.5	9′-6″	9′-0″	240	2.49
F-10	10′-0″	9′-0″	240	2.62
F-10.5	10′-6″	10′-0″	260	2.75
F-11	11′-0″	10′-6″	270	2.88
F-12	12′-0″	11′-6″	300	3.14
C✳				0.44

✳ SURFACE OF BASE TO BE CONSTRUCTED SQUARE FOR A DEPTH OF 12″.

BASE EMBEDMENT IN SOLID ROCK	
SOLID ROCK ENCOUNTER POINT	REQUIRED EMBEDMENT FOR BASE TYPE A-10 F-10
AT SURFACE	4′-9″
AT ONE-FOURTH NORMAL DEPTH	4′-0″
AT ONE-HALF NORMAL DEPTH	3′-3″
AT THREE-FOURTHS NORMAL DEPTH	1′-3″

1. REQUIRED EMBEDMENT DEPTHS CAN BE INTERPOLATED BETWEEN ENCOUNTER POINTS FOR OTHER SOLID ROCK ENCOUNTER DEPTHS.
2. NORMAL LENGTHS FOR ANCHOR BOLTS AND REINFORCING STEEL WILL BE REQUIRED.
3. CORE DRILL HOLES FOR ANCHOR BOLTS AND REINFORCING STEEL IN SOLID ROCK SHALL BE PROVIDED. CORE DRILL HOLES SHALL BE TWICE THE DIAMETER OF THE ANCHOR BOLT AND REINFORCING STEEL DIAMETER AND TO WITHIN 3 INCHES OF THE NORMAL BASE DEPTH.
4. IF SOIL, SHALE, GRAVEL, FRACTURED ROCK, OR VOIDS ARE ENCOUNTERED DURING CORE DRILLING, THE ROCK SHALL BE REMOVED TO THE POINT OF ENCOUNTER.
5. ANCHOR BOLTS AND REINFORCING STEEL SHALL BE GROUTED IN THE CORE DRILL HOLES WITH NON-SHRINK GROUT HAVING A MINIMUM STRENGTH OF 9,000 POUNDS IN 24 HOURS.
6. STRAIGHT ANCHOR BOLTS OF THE LENGTH SHOWN IN THE ANCHOR BOLT TABLE UNDER THE COLUMN "BOLT LENGTH" ARE ADEQUATE FOR USE IN GROUTED CORE DRILLED HOLES.

① APPLICABLE ONLY WHERE CONTROLLER IS MOUNTED TO A SIGNAL POLE.

② BASE PLATE SHALL STAY WITHIN THE TOP OF THE POST BASE DIAMETER.

③ ANCHOR BOLT DIMENSIONS ARE SHOWN ON THE MANUFACTURER'S APPROVED DRAWINGS.

④ MAXIMUM BOLT CIRCLE DIAMETER IS 26″. BASE PLATE SHALL STAY WITHIN THE TOP OF THE POST BASE DIAMETER.

⑤ ARM LENGTH DETERMINED BY LENGTH OF LONGEST ARM FOR TYPE B & BL SIGNAL POSTS.

⑥ BASE TYPE A OR F DETERMINED BY LOCATION OF POST BASE.

⑦ SOIL DEPTH, NO ROCK.

⑧ INCLUDE #4 TIE BAR.

⑨ WHEN CONCRETE BASE IS LOCATED WITHIN 8″ CONCRETE DIVISIONAL ISLAND, EMBEDMENT LENGTH MAY BE REDUCED BY ½ DIAMETER OF THE DRILLED SHAFT.

MISSOURI HIGHWAYS AND TRANSPORTATION COMMISSION
105 WEST CAPITOL
JEFFERSON CITY, MO 65102
1-888-ASK-MODOT (1-888-275-6636)

STATE OF MISSOURI KATHRYN PHILLIPS HARVEY NUMBER PE-23751 PROFESSIONAL ENGINEER
THIS SHEET HAS BEEN SIGNED, SEALED AND DATED ELECTRONICALLY.

TRAFFIC SIGNALS

POST BASES

DATE EFFECTIVE: 02/01/2008
DATE PREPARED: 7/19/2012

902.30P

SHEET NO. 1 OF 2

IF A SEAL IS PRESENT ON THIS SHEET IT HAS BEEN ELECTRONICALLY SEALED AND DATED.

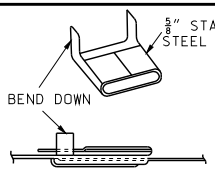

VIEW SHOWING

ENDS OF STRAP CLAMPED IN SEAL

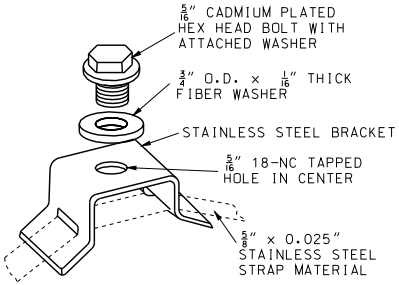

STRAP TYPE SIGN SUPPORT

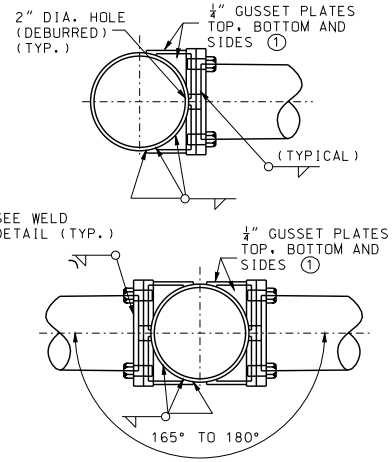

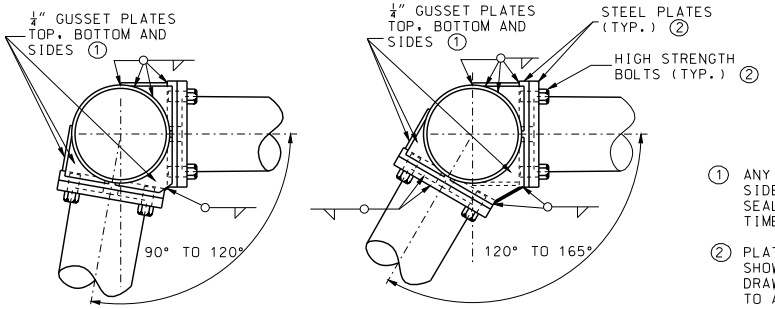

ARM ATTACHMENTS

(1) ANY OPENINGS BETWEEN TOP AND SIDE GUSSET PLATES SHALL BE SEALED WITH LIFETIME CAULK AT TIME OF INSTALLATION.

(2) PLATE AND BOLT SIZES SHALL BE SHOWN ON FABRICATORS SHOP DRAWINGS AND SHALL BE SUBJECT TO APPROVAL.

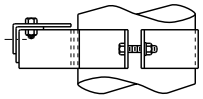

TOP VIEW

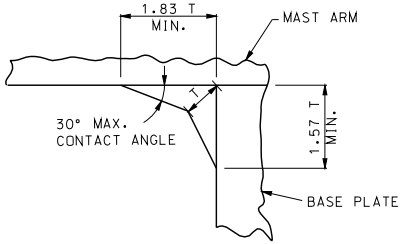

WELD DETAIL

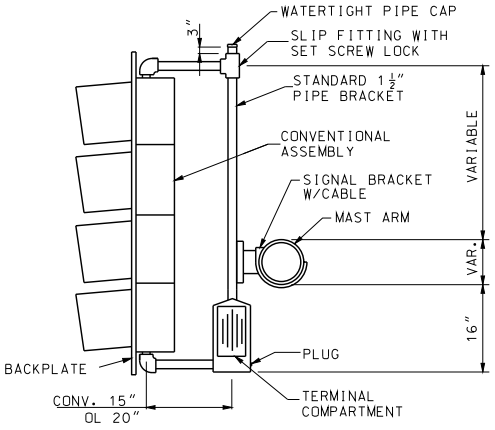

MAST ARM MOUNTED SIGNAL HEAD

(SEE STANDARD 902.00)

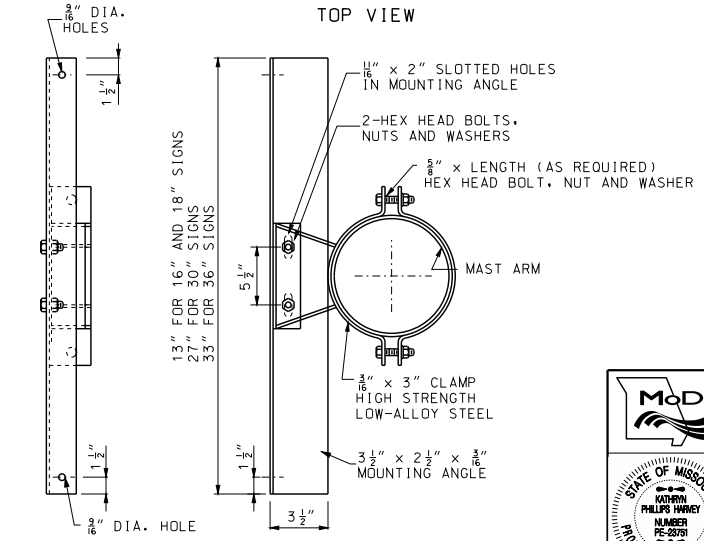

FRONT VIEW SIDE VIEW

SIGN BRACKET ASSEMBLY

ALTERNATE DESIGN MAY BE PROVIDED AS APPROVED BY ENGINEER

IF A SEAL IS PRESENT ON THIS SHEET IT HAS BEEN ELECTRONICALLY SEALED AND DATED.

MISSOURI HIGHWAYS AND TRANSPORTATION COMMISSION
105 WEST CAPITOL
JEFFERSON CITY, MO 65102
1-888-ASK-MODOT (1-888-275-6636)

STATE OF MISSOURI
KATHRYN PHILLIPS HARVEY
NUMBER PE-23751
PROFESSIONAL ENGINEER
THIS SHEET HAS BEEN SIGNED, SEALED AND DATED ELECTRONICALLY.

TRAFFIC SIGNALS

TUBULAR STEEL POSTS

DATE EFFECTIVE:	02/01/2008	902.400	SHEET NO.
DATE PREPARED:	1/17/2013		2 OF 3

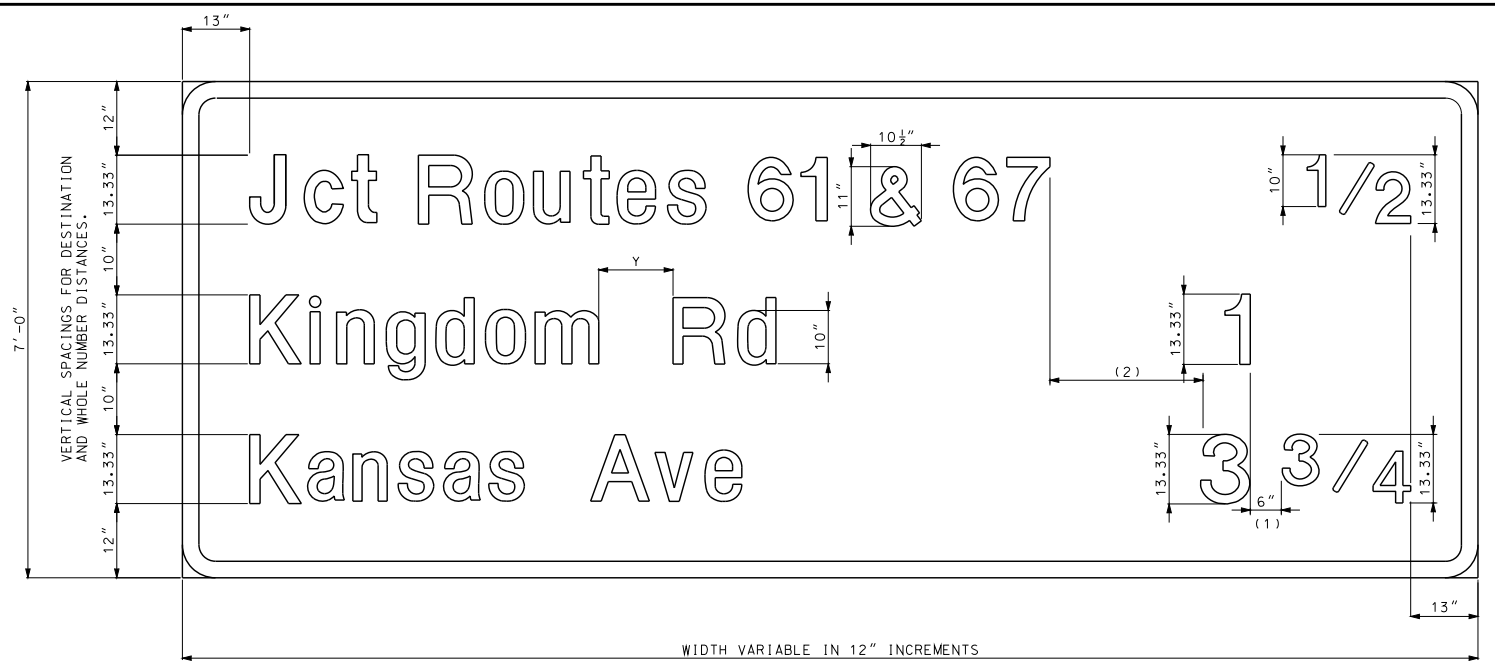

LEGEND, SYMBOLS & BORDER

L-3 DIRECT APPLIED (CUT FROM MATERIAL SHOWN ON PLANS.)

BACKGROUND REFLECTIVE SHEETING

R2 REFER TO MISSOURI SPECIFICATION SECTION 1042.2.7.2
R4 REFER TO MISSOURI SPECIFICATION SECTION 1042.2.7.3

NOTES:

"ROUTE" SHALL NOT BE ABBREVIATED.

INTERSTATES SHALL BE REFERENCED WITH A CAPITAL "I", (EX. ROUTE I-29).

Y = UPPER CASE LETTER HEIGHT.

USE HYPHEN TO JOIN 2 ROUTES SHARING THE SAME ROADWAY.

USE AN AMPERSAND TO SEPERATE 2 ROUTES ON INDIVIDUAL ROADWAYS.

USE COMMAS AND AN AMPERSAND TO SEPERATE 3 OR MORE ROUTES ON INDIVIDUAL ROADWAYS.

(1) 6" STANDARD, HORIZONTALLY ALIGN RIGHT EXTREME EDGE OF WHOLE NUMERALS, REGARDLESS OF LINE OF COPY.

HORIZONTALLY ALIGN RIGHT EXTREME EDGE OF FRACTIONS REGARDLESS OF LINE COPY.

WHEN NO FRACTIONS EXIST, RIGHT EXTREME EDGE OF WHOLE NUMERALS SHALL BE 13" FROM EDGE OF SIGN.

(2) UPPER CASE LETTER HEIGHT FROM LONGEST DESTINATION TO LONGEST DISTANCE.

INCREASE THIS SPACE TO PROVIDE EVEN 12" WIDTH FOR ENTIRE SIGN.

GENERAL NOTES (ALL SIGNS):

GROUND MOUNTED SIGNS GREATER THAN 6 FEET WIDE OR SIGNS GREATER THAN 30 SQUARE FEET SHALL BE STRUCTURAL.

GUIDE SIGN WIDTH VARIABLE IN 12" INCREMENTS.

GUIDE SIGN HEIGHT VARIABLE IN 12" INCREMENTS.

STATE ABBREVIATIONS SHALL BE THE STANDARD 2-LETTER POSTAL ABBREVIATION, AND SHALL BE DETAILED IN ALL-CAPS.

SEE OTHER STANDARD DRAWINGS FOR ARROW DETAILS.

BORDER (ALL SIGNS)			
CORNER RADII		WIDTH	
SIGN HEIGHT	INCHES	LETTER SIZE	INCHES
LESS THAN OR EQUAL TO 6'	6	LESS THAN 12"	1
7'	9		
GREATER THAN OR EQUAL TO 8'	12	12" OR LARGER	2

GENERAL SIGN DATA				
STR2L-3	TYPE	REFLECTIVE SHEETING TYPE	COLOR	LETTER SERIES
BACKGROUND		R2	GREEN	
LEGEND	L-3	R4	WHITE	E(M)
SYMBOLS	L-3	R4	VAR.	
BORDER	L-3	R4	WHITE	
SUBSTRATE	STRUCTURAL			

MISSOURI HIGHWAYS AND TRANSPORTATION COMMISSION
105 WEST CAPITOL
JEFFERSON CITY, MO 65102
1-888-ASK-MODOT (1-888-275-6636)

STATE OF MISSOURI
EILEEN H. RICKERS
NUMBER PE-28338
PROFESSIONAL ENGINEER
THIS SHEET HAS BEEN SIGNED, SEALED AND DATED ELECTRONICALLY.

HIGHWAY SIGNING STRUCTURAL SIGNS

INTERCHANGE SEQUENCE

DATE EFFECTIVE: 02/01/2011
DATE PREPARED: 12/22/2011

903.02AL

SHEET NO. 1 OF 19

IF A SEAL IS PRESENT ON THIS SHEET IT HAS BEEN ELECTRONICALLY SEALED AND DATED.

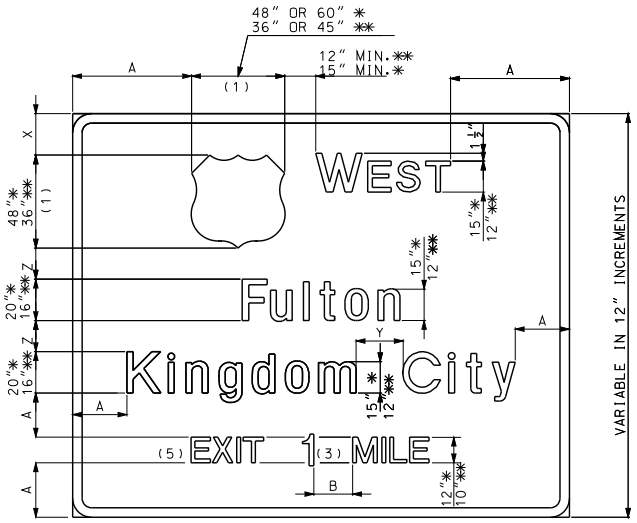

TYPICAL ADVANCE GUIDE

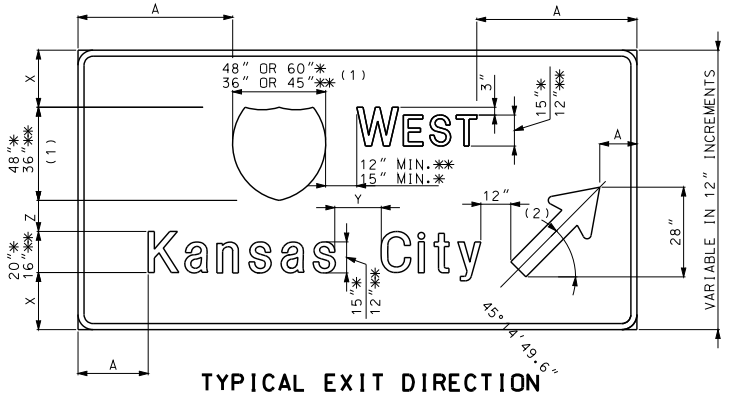

TYPICAL EXIT DIRECTION

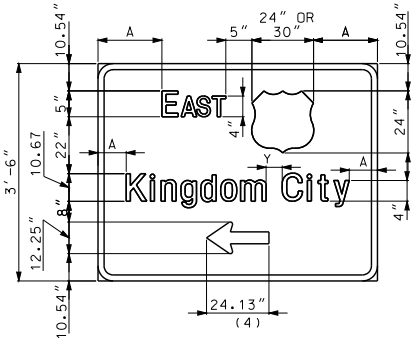

CROSSROAD GUIDE

NOTES:

CARDINAL DIRECTION PLACED ON EXIT SIDE OF SHIELD.

(1) ALTERNATE ROUTE SHIELDS MAY BE USED AS REQUIRED.

(2) TYPE A ARROW AT 45° STANDARD REGARDLESS OF ROADWAY GEOMETRICS.

(3) WHOLE NUMERALS, 18" GROUND MOUNT, 15" OVERHEAD.

(4) LENGTH OF ARROW IS EQUAL TO 50% OF LEGEND LENGTH WITH MAXIMUM OF 48" IN 12" INCREMENTS.

(5) IF EXIT NUMBER PANELS ARE USED WITH THE ADVANCE GUIDE SIGN, "EXIT" WILL NOT BE REQUIRED.

GUIDE SIGN LEGEND

A = VARIABLE SO THAT THE OVERALL SIGN WIDTH IS IN 12" INCREMENTS MINIMUM LOWER CASE HEIGHT.
B = 1.5 TIMES WORDING LETTER HEIGHT.
X = APPROXIMATELY THE UPPERCASE LETTER HEIGHT. VARY THIS DIMENSION FOR HEIGHT AND WIDTH INCREMENTAL ROUNDING.
Y = UPPER CASE LETTER HEIGHT
Z = LOWER CASE LETTER HEIGHT
* = GROUND MOUNT
** = OVERHEAD

NOTES:

NUMERAL TO FRACTION SPACE, 8" GROUND MOUNT, 6" OVERHEAD.

HORIZONTALLY CENTER ALL LINES OF TEXT AND SYMBOLS.

BOX DIMENSION FRACTIONS: OVERHEAD IS 15" H x 20"W FOR 1/2, 1/4, 15"H x 25"W FOR 3/4, GROUND MOUNT 18"H x 24"W FOR 1/2, 1/4, 18"H x 30"W FOR 3/4.

LEGEND, SYMBOLS & BORDER

L-3 DIRECT APPLIED (CUT FROM MATERIAL SHOWN ON PLANS.)

BACKGROUND REFLECTIVE SHEETING

R2 REFER TO MISSOURI SPECIFICATION SECTION 1042.2.7.2
R4 REFER TO MISSOURI SPECIFICATION SECTION 1042.2.7.3

BORDER (ALL SIGNS)			
CORNER RADII		WIDTH	
SIGN HEIGHT	INCHES	LETTER SIZE	INCHES
LESS THAN OR EQUAL TO 6'	6	LESS THAN 12"	1
7'	9		
GREATER THAN OR EQUAL TO 8'	12	12" OR LARGER	2

GENERAL SIGN DATA					
		REFL. SHEETING TYPE			LETTER
STR2L-3	TYPE	GROUND	OVERHEAD	COLOR	SERIES
BACKGROUND	L-3	R2	R2	GREEN	
LEGEND	L-3	R4	R4	WHITE	E(M)
SYMBOLS	L-3	R4	R4	VAR.	
BORDER	L-3	R4	R4	WHITE	
SUBSTRATE	STRUCTURAL (SEE GEN. NOTES ON SH. 1)				

MISSOURI HIGHWAYS AND TRANSPORTATION COMMISSION
105 WEST CAPITOL
JEFFERSON CITY, MO 65102
1-888-ASK-MODOT (1-888-275-6636)

STATE OF MISSOURI
ELIESH H. RICKERS
NUMBER PE-28338
PROFESSIONAL ENGINEER
THIS SHEET HAS BEEN SIGNED, SEALED AND DATED ELECTRONICALLY.

HIGHWAY SIGNING STRUCTURAL SIGNS

INTERCHANGE SEQUENCE

DATE EFFECTIVE: 02/01/2012
DATE PREPARED: 12/22/2011

903.02AL

SHEET NO. 2 OF 19

IF A SEAL IS PRESENT ON THIS SHEET IT HAS BEEN ELECTRONICALLY SEALED AND DATED.

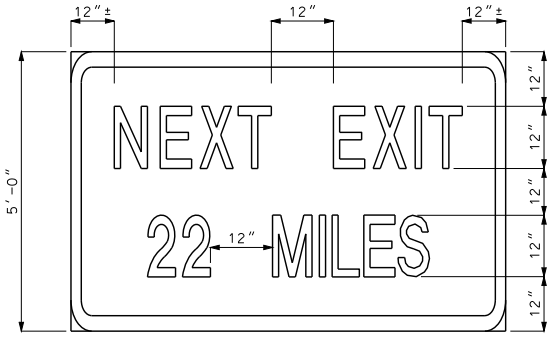

E2-1A

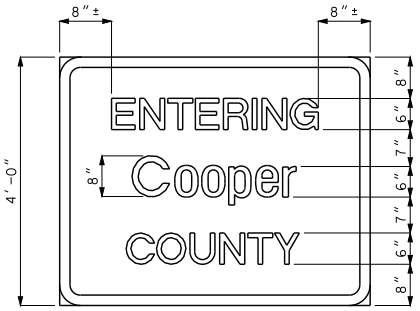

COUNTY LINE

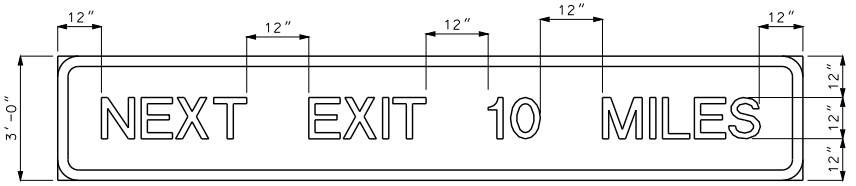

E2-1
NEXT EXIT SUPPLEMENTAL
ADVANCE GUIDE

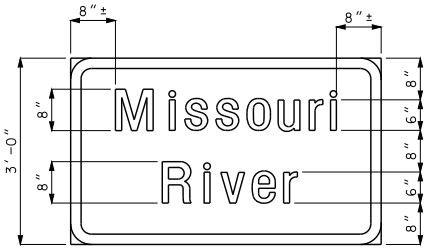

RIVER/CREEK
(TWO LINES)

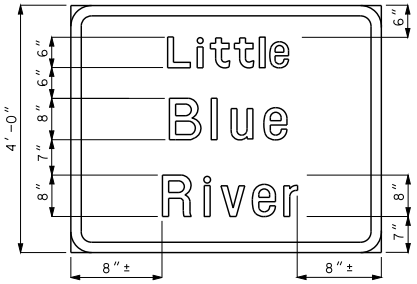

RIVER/CREEK
(THREE LINES)

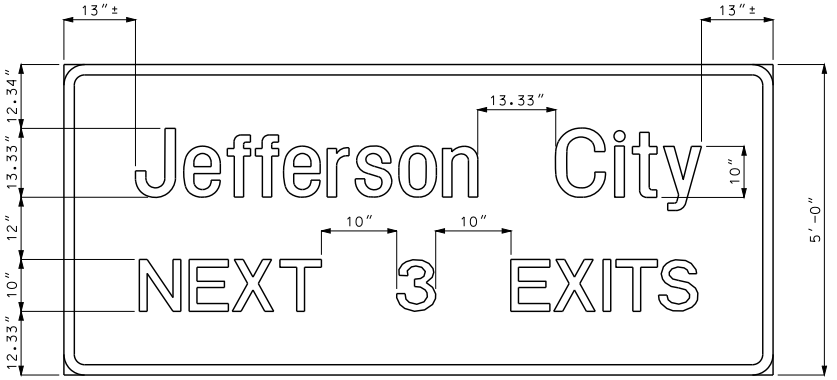

NEXT (X) EXITS

BORDER (ALL SIGNS)			
CORNER RADII		WIDTH	
SIGN HEIGHT	INCHES	LETTER SIZE	INCHES
LESS THAN OR EQUAL TO 6'	6	LESS THAN 12"	1
7'	9		
GREATER THAN OR EQUAL TO 8'	12	12" OR LARGER	2

LEGEND, SYMBOLS & BORDER

L-3 DIRECT APPLIED (CUT FROM MATERIAL SHOWN ON PLANS.)

GENERAL SIGN DATA				
STR2L-3	TYPE	REFLECTIVE SHEETING TYPE	COLOR	LETTER SERIES
BACKGROUND		R2	GREEN	
LEGEND	L-3	R4	WHITE	E(M)
SYMBOLS	L-3	R4	VAR.	
BORDER	L-3	R4	WHITE	
SUBSTRATE	STRUCTURAL (SEE GEN. NOTES ON SH. 1)			

BACKGROUND REFLECTIVE SHEETING

R2 REFER TO MISSOURI SPECIFICATION SECTION 1042.2.7.2
R4 REFER TO MISSOURI SPECIFICATION SECTION 1042.2.7.3

IF A SEAL IS PRESENT ON THIS SHEET IT HAS BEEN ELECTRONICALLY SEALED AND DATED.

MISSOURI HIGHWAYS AND TRANSPORTATION COMMISSION
105 WEST CAPITOL
JEFFERSON CITY, MO 65102
1-888-ASK-MODOT (1-888-275-6636)

STATE OF MISSOURI
ELIESH H. RICKERS
NUMBER PE-28336
PROFESSIONAL ENGINEER
THIS SHEET HAS BEEN SIGNED, SEALED AND DATED ELECTRONICALLY.

HIGHWAY SIGNING
STRUCTURAL SIGNS
MISC. FREEWAY AND EXPRESSWAY GUIDE SIGNS

DATE EFFECTIVE: 02/01/2012
DATE PREPARED: 12/22/2011

903.02AL

SHEET NO. 3 OF 19

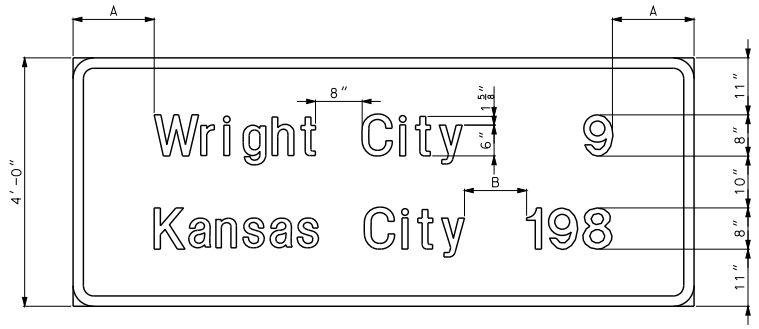

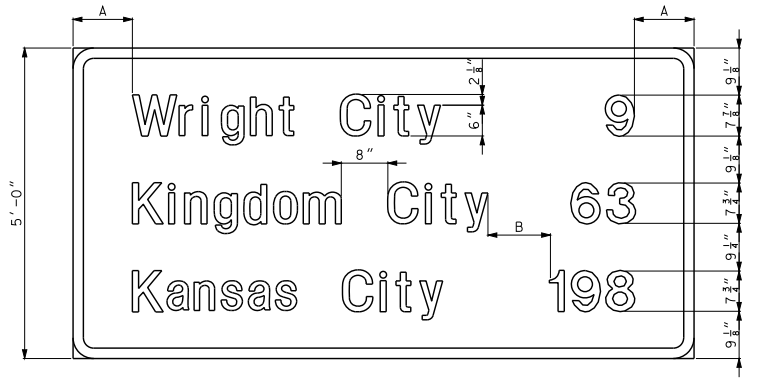

NOTE: FOR INTERSTATE, LAST LINE OF COPY SHALL INDICATE APPROVED AASHTO CONTROL CITY.

POST INTERCHANGE/INTERSECTION DISTANCE

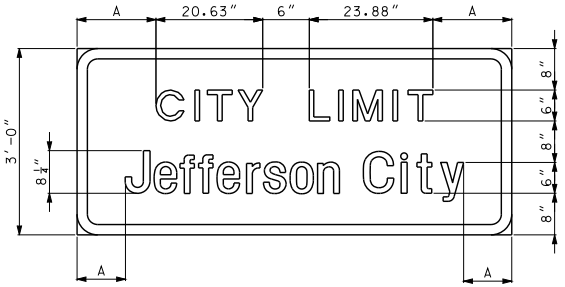

CITY LIMITS

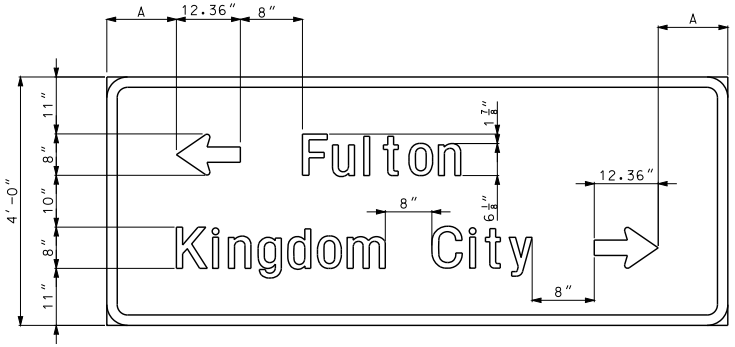

NOTE: DESTINATIONS ARE PLACED IN THE FOLLOWING ORDER: AHEAD, LEFT, RIGHT. TYPE D ARROWS SHALL BE USED.

ADVANCE INTERSECTION DESTINATION

A = VARIABLE SO THAT THE OVERALL SIGN WIDTH IS IN 12" INCREMENTS, MINIMUM LOWER CASE HEIGHT.

B = UPPER CASE LETTER HEIGHT, FROM LONGEST DESTINATION TO LONGEST DISTANCE, REGARDLESS OF LINE COPY.

BORDER (ALL SIGNS)			
CORNER RADII		WIDTH	
SIGN HEIGHT	INCHES	LETTER SIZE	INCHES
LESS THAN OR EQUAL TO 6'	6	LESS THAN 12"	1
7'	9		
GREATER THAN OR EQUAL TO 8'	12	12" OR LARGER	2

GENERAL SIGN DATA				
STR2L-3	TYPE	REFLECTIVE SHEETING TYPE	COLOR	LETTER SERIES
BACKGROUND		R2	GREEN	
LEGEND	L-3	R4	WHITE	E(M)
SYMBOLS	L-3	R4	VAR.	
BORDER	L-3	R4	WHITE	
SUBSTRATE	STRUCTURAL (SEE GEN. NOTES ON SH. 1)			

BACKGROUND REFLECTIVE SHEETING

R2 REFER TO MISSOURI SPECIFICATION SECTION 1042.2.7.2
R4 REFER TO MISSOURI SPECIFICATION SECTION 1042.2.7.3

LEGEND, SYMBOLS & BORDER

L-3 DIRECT APPLIED (CUT FROM MATERIAL SHOWN ON PLANS.)

MISSOURI HIGHWAYS AND TRANSPORTATION COMMISSION
105 WEST CAPITOL
JEFFERSON CITY, MO 65102
1-888-ASK-MODOT (1-888-275-6636)

STATE OF MISSOURI
EILEEN H. RICKERS
NUMBER PE-28336
PROFESSIONAL ENGINEER
THIS SHEET HAS BEEN SIGNED, SEALED AND DATED ELECTRONICALLY.

HIGHWAY SIGNING STRUCTURAL SIGNS

MISC. GOUND MOUNTED FREEWAY AND EXPRESSWAY GUIDE SIGNS

DATE EFFECTIVE: 02/01/2012
DATE PREPARED: 12/22/2011

903.02AL

SHEET NO. 4 OF 19

IF A SEAL IS PRESENT ON THIS SHEET IT HAS BEEN ELECTRONICALLY SEALED AND DATED.

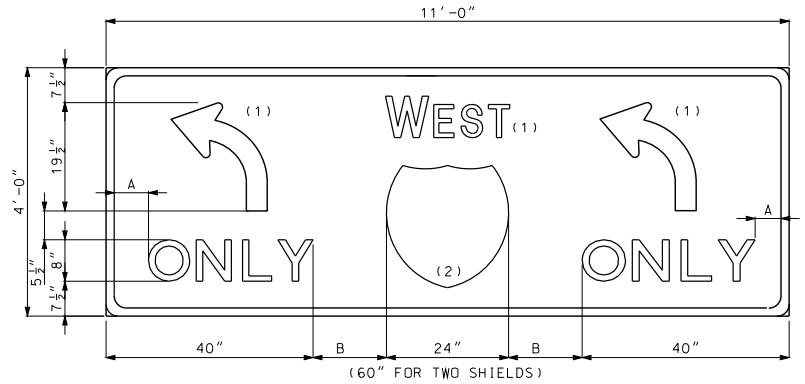

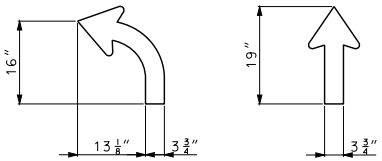

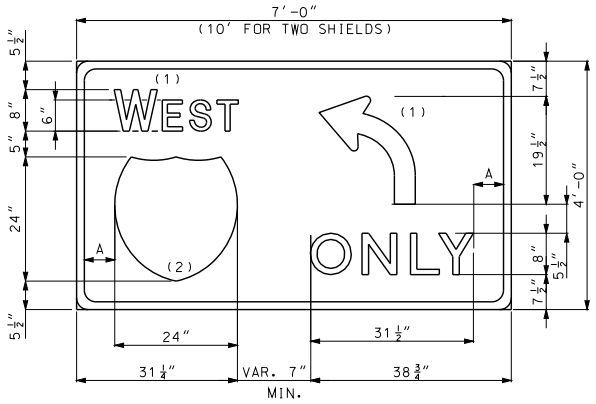

A = VARIABLE SO THAT THE OVERALL SIGN WIDTH IS IN 12″ INCREMENTS , MINIMUM 6″.

B = VARIABLE, MINIMUM 7″.

NOTES:

SHEILD SHALL APPEAR ON THE EXIT SIDE OF SIGN.

SIGN ALWAYS PLACED OVERHEAD. MOUNT ON BRIDGE WHEREVER POSSIBLE.

(1) ALL CARDINAL DIRECTIONS AND ARROWS HORIZONTALLY CENTERED IN SPACE PROVIDED.

(2) ALTERNATE ROUTE SHIELDS MAY BE PROVIDED. USE STANDARD 24″ OR 30″ SHIELD IN SPACE PROVIDED.

BORDER (ALL SIGNS)			
CORNER RADII		WIDTH	
SIGN HEIGHT	INCHES	LETTER SIZE	INCHES
LESS THAN OR EQUAL TO 6′	6	LESS THAN 12″	1
7′	9		
GREATER THAN OR EQUAL TO 8′	12	12″ OR LARGER	2

BACKGROUND REFLECTIVE SHEETING

R2 REFER TO MISSOURI SPECIFICATION SECTION 1042.2.7.2
R4 REFER TO MISSOURI SPECIFICATION SECTION 1042.2.7.3

GENERAL SIGN DATA				
STR2L-3	TYPE	REFLECTIVE SHEETING TYPE	COLOR	LETTER SERIES
BACKGROUND		R2	GREEN	
LEGEND	L-3	R4	WHITE	E(M)
SYMBOLS	L-3	R4	VAR.	
BORDER	L-3	R4	WHITE	
SUBSTRATE	STRUCTURAL			

LEGEND, SYMBOLS & BORDER

L-3 DIRECT APPLIED (CUT FROM MATERIAL SHOWN ON PLANS.)

IF A SEAL IS PRESENT ON THIS SHEET IT HAS BEEN ELECTRONICALLY SEALED AND DATED.

MISSOURI HIGHWAYS AND TRANSPORTATION COMMISSION
105 WEST CAPITOL
JEFFERSON CITY, MO 65102
1-888-ASK-MODOT (1-888-275-6636)

STATE OF MISSOURI
EILEEN H. RICKERS
NUMBER PE-28336
PROFESSIONAL ENGINEER
THIS SHEET HAS BEEN SIGNED, SEALED AND DATED ELECTRONICALLY.

HIGHWAY SIGNING STRUCTURAL SIGNS
LANE CONTROL WITH ROUTE SHIELD

DATE EFFECTIVE: 02/01/2012
DATE PREPARED: 12/22/2011

903.02AL

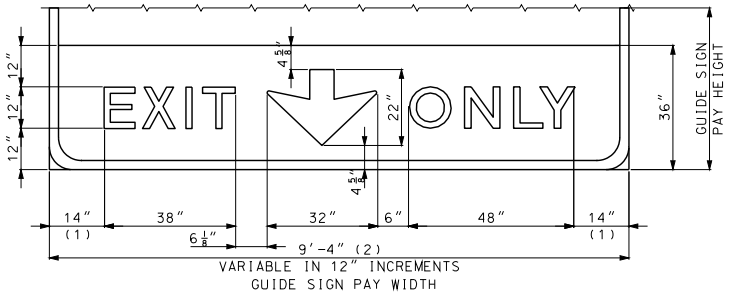

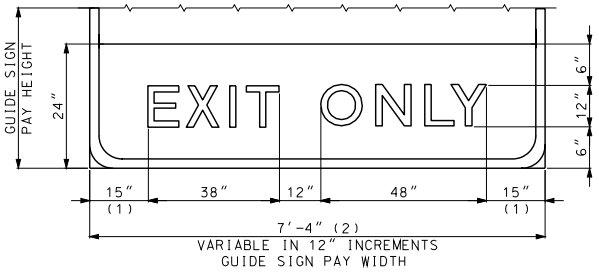

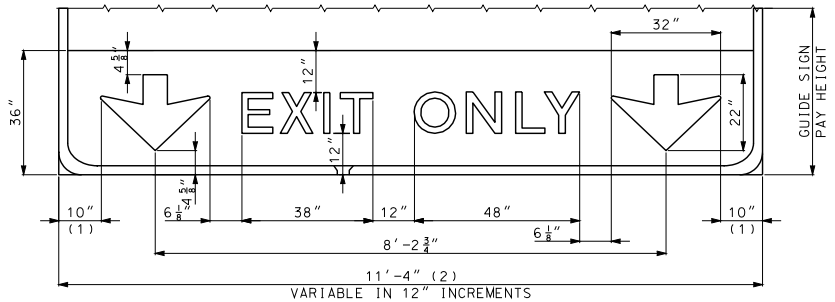

(1) TYPICALLY VARY THIS DISTANCE TO MATCH WIDTH OF GUIDE SIGN.

(2) MINIMUM GUIDE SIGN WIDTH WHEN EXIT ONLY PANEL IS CONTROL LINE FOR SIGN WIDTH.

BORDER (ALL SIGNS)			
CORNER RADII		WIDTH	
SIGN HEIGHT	INCHES	LETTER SIZE	INCHES
LESS THAN OR EQUAL TO 6'	6	LESS THAN 12"	1
7'	9		
GREATER THAN OR EQUAL TO 8'	12	12" OR LARGER	2

BACKGROUND REFLECTIVE SHEETING

R4 REFER TO MISSOURI SPECIFICATION SECTION 1042.2.7.3

GENERAL SIGN DATA				
STR4L-1	TYPE	REFLECTIVE SHEETING TYPE	COLOR	LETTER SERIES
BACKGROUND		R4	FL. YL.	
LEGEND	L-1		BLACK	E (MOD)
SYMBOLS	L-1		BLACK	
BORDER	L-1		BLACK	
SUBSTRATE	STRUCTURAL			

LEGEND, SYMBOLS AND BORDER

L-1 SCREEN PRINT, REVERSE SCREEN PRINT, OPAQUE OR TRANSLUCENT CUTABLE FILMS AS APPROVED BY ENGINEER BASED ON SIGN COLOR COMBINATION.

GENERAL NOTES:

NO DIRECT PAY MADE FOR THIS PANEL. COST FOR PANEL IS INCLUDED IN THE COST FOR THE GUIDE SIGN TO WHICH THIS PANEL IS ATTACHED.

FOR OVERHEAD USE ONLY.

PLACE SIGN ON TRUSS TO ALIGN CENTER OF LANE WITH TYPE C ARROW.

MISSOURI HIGHWAYS AND TRANSPORTATION COMMISSION
105 WEST CAPITOL
JEFFERSON CITY, MO 65102
1-888-ASK-MODOT (1-888-275-6636)

STATE OF MISSOURI
EILEEN H. RACKERS
NUMBER PE-28338
PROFESSIONAL ENGINEER
THIS SHEET HAS BEEN SIGNED, SEALED AND DATED ELECTRONICALLY.

HIGHWAY SIGNING STRUCTURAL SIGNS

EXIT ONLY PANELS

DATE EFFECTIVE: 02/01/2012
DATE PREPARED: 12/22/2011

903.02AL

IF A SEAL IS PRESENT ON THIS SHEET IT HAS BEEN ELECTRONICALLY SEALED AND DATED.

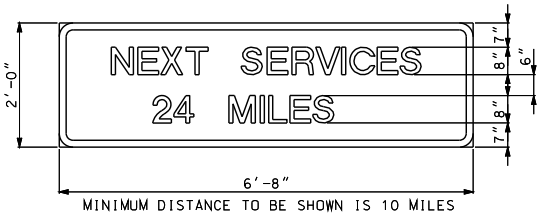

MINIMUM DISTANCE TO BE SHOWN IS 10 MILES

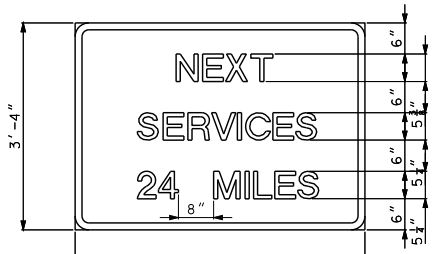

MINIMUM DISTANCE TO BE SHOWN IS 10 MILES

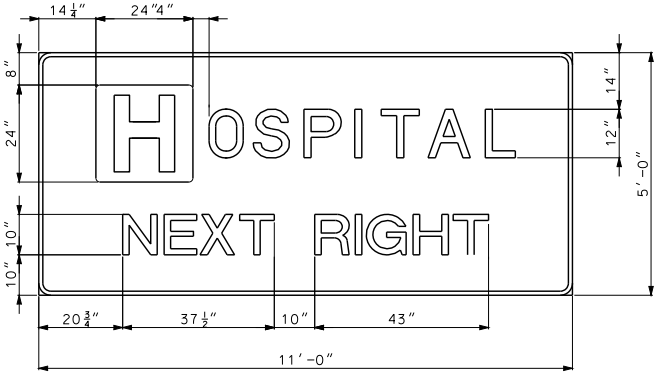

NOTE:
FOR THE LETTER "H" USE THE D9-2 SIGNFACE AS A DEMOUNTABLE SHIELD.

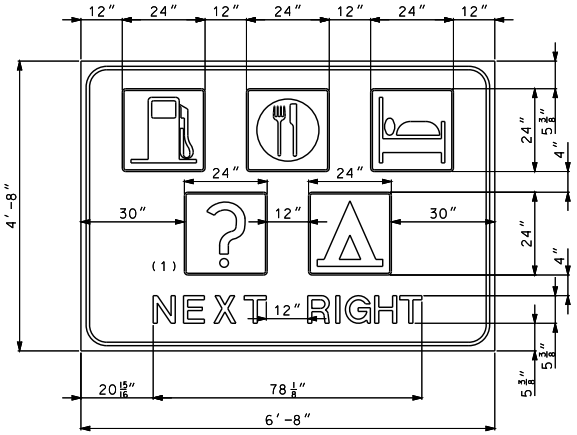

INTERSTATE - USE "EXIT XX"
FREEWAY - USE "NEXT RIGHT" "SECOND RIGHT"

(1) TO BE USED IN CONFORMANCE WITH MANUAL ON UNIFORM TRAFFIC CONTROL.

NOTE:
HORIZONTALLY CENTER ALL LINES OF TEXT AND SYMBOLS.

BORDER (ALL SIGNS)			
CORNER RADII		WIDTH	
SIGN HEIGHT	INCHES	LETTER SIZE	INCHES
LESS THAN OR EQUAL TO 6'	6	LESS THAN 12"	1
7'	9		
GREATER THAN OR EQUAL TO 8'	12	12" OR LARGER	2

BACKGROUND REFLECTIVE SHEETING

R2 REFER TO MISSOURI SPECIFICATION SECTION 1042.2.7.2
R4 REFER TO MISSOURI SPECIFICATION SECTION 1042.2.7.3

GENERAL SIGN DATA				
STR2L-3	TYPE	REFLECTIVE SHEETING TYPE	COLOR	LETTER SERIES
BACKGROUND		R2	BLUE	
LEGEND	L-3	R4	WHITE	E(M)
SYMBOLS	L-3	R4	WHITE	
BORDER	L-3	R4	WHITE	
SUBSTRATE	STRUCTURAL			

LEGEND, SYMBOLS & BORDER

L-3 DIRECT APPLIED (CUT FROM MATERIAL SHOWN ON PLANS.)

MISSOURI HIGHWAYS AND TRANSPORTATION COMMISSION
105 WEST CAPITOL
JEFFERSON CITY, MO 65102
1-888-ASK-MODOT (1-888-275-6636)

STATE OF MISSOURI
EILEEN H. RICKERS
NUMBER PE-28336
PROFESSIONAL ENGINEER
THIS SHEET HAS BEEN SIGNED, SEALED AND DATED ELECTRONICALLY.

HIGHWAY SIGNING STRUCTURAL SIGNS

SERVICE SIGNS

DATE EFFECTIVE: 02/01/2012
DATE PREPARED: 12/22/2011

903.02AL

SHEET NO. 7 OF 19

IF A SEAL IS PRESENT ON THIS SHEET IT HAS BEEN ELECTRONICALLY SEALED AND DATED.

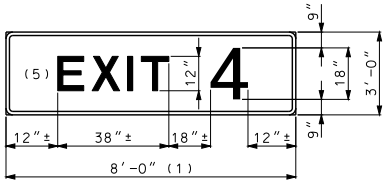

(1) 9'- 0" 2 THROUGH 9 WITH A LETTER
11'- 0" FOR "EXITS" 2 THROUGH 9 WITH A-B LETTERS

1 THROUGH 9

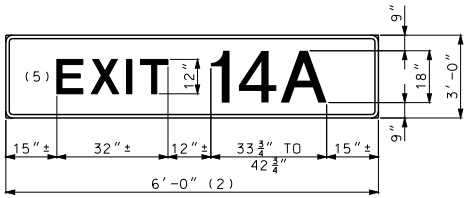

(2) 12'- 0" FOR "EXITS" 10 THROUGH 19
NUMERAL WITH A-B LETTERS

10 THROUGH 19 NUMERAL WITH LETTER

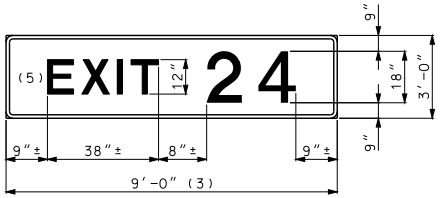

(3) 9'- 0" WITH NUMBER 1 NUMERAL
11'- 0" WITH A LETTER
10'- 0" WITH A NUMBER 1 NUMERAL AND A LETTER
12'- 0" FOR "EXITS" WITH A NUMBER 1 NUMERAL AND A-B LETTERS
13'- 0" FOR "EXITS" WITH DOUBLE NUMERAL AND A-B LETTERS

20 THROUGH 99

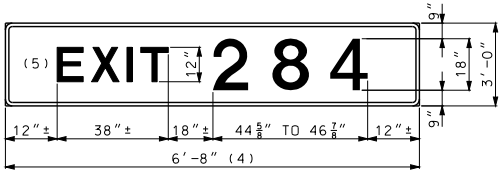

(4) 10'- 0" WITH NUMBER 1 NUMERAL
12'- 0" WITH A LETTER
12'- 0" WITH A NUMBER 1 NUMERAL AND A LETTER
13'- 0" FOR "EXITS" WITH A TRIPLE NUMERAL WITH A NUMBER 1 NUMERAL AND A-B LETTERS
14'- 0" FOR "EXITS" WITH A TRIPLE NUMERAL AND A-B LETTERS

100 AND OVER

GENERAL NOTES:

FOR MOUNTING DETAILS SEE OTHER DRAWINGS.

PANEL SHALL BE MOUNTED DIRECTLY TO THE TOP OF THE GUIDE SIGN AND ALIGNED WITH THE EXIT SIDE.

LEGEND, SYMBOLS & BORDER

L-3 DIRECT APPLIED (CUT FROM MATERIAL SHOWN ON PLANS.)

BACKGROUND REFLECTIVE SHEETING

R2 REFER TO MISSOURI SPECIFICATION SECTION 1042.2.7.2
R4 REFER TO MISSOURI SPECIFICATION SECTION 1042.2.7.3

BORDER (ALL SIGNS)			
CORNER RADII		WIDTH	
SIGN HEIGHT	INCHES	LETTER SIZE	INCHES
LESS THAN OR EQUAL TO 6'	6	LESS THAN 12"	1
7'	9		
GREATER THAN OR EQUAL TO 8'	12	12" OR LARGER	2

GENERAL SIGN DATA					
		REFL. SHEETING TYPE			LETTER
STR2L-3	TYPE	GROUND	OVERHEAD	COLOR	SERIES
BACKGROUND		R2	R2	GREEN	
LEGEND	L-3	R4	R4	WHITE	E(M)
SYMBOLS	L-3	R4	R4	VAR.	
BORDER	L-3	R4	R4	WHITE	
SUBSTRATE	STRUCTURAL				

IF A SEAL IS PRESENT ON THIS SHEET IT HAS BEEN ELECTRONICALLY SEALED AND DATED.

MISSOURI HIGHWAYS AND TRANSPORTATION COMMISSION
105 WEST CAPITOL
JEFFERSON CITY, MO 65102
1-888-ASK-MODOT (1-888-275-6636)

STATE OF MISSOURI
EILEEN H. RICKERS
NUMBER PE-26336
PROFESSIONAL ENGINEER
THIS SHEET HAS BEEN SIGNED, SEALED AND DATED ELECTRONICALLY.

HIGHWAY SIGNING

EXIT NUMBER PANELS

DATE EFFECTIVE: 02/01/2012
DATE PREPARED: 12/22/2011

903.02AL

SHEET NO. 8 OF 19

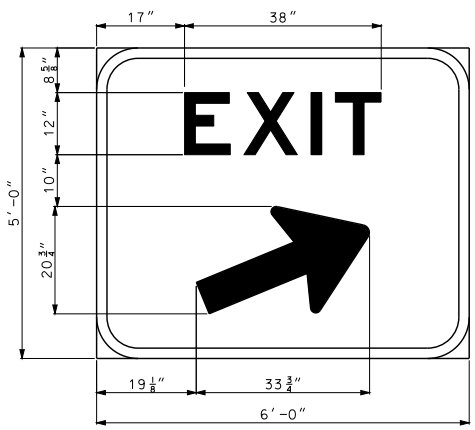

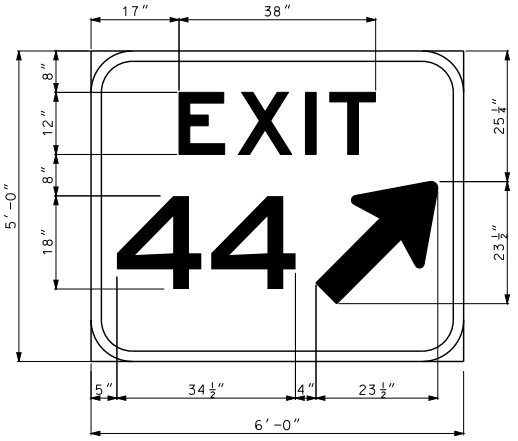

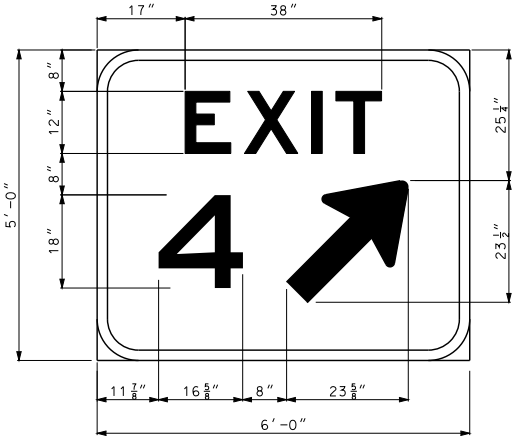

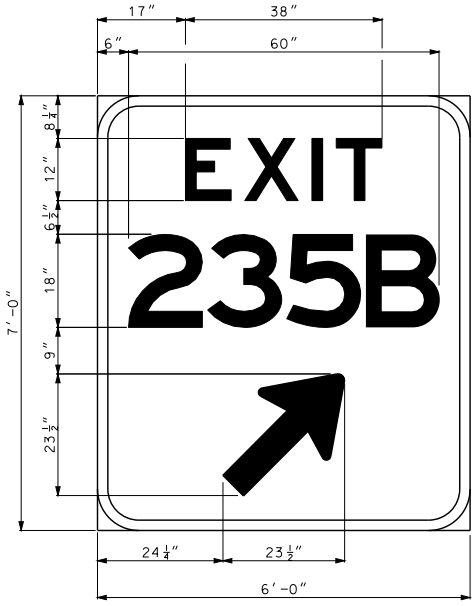

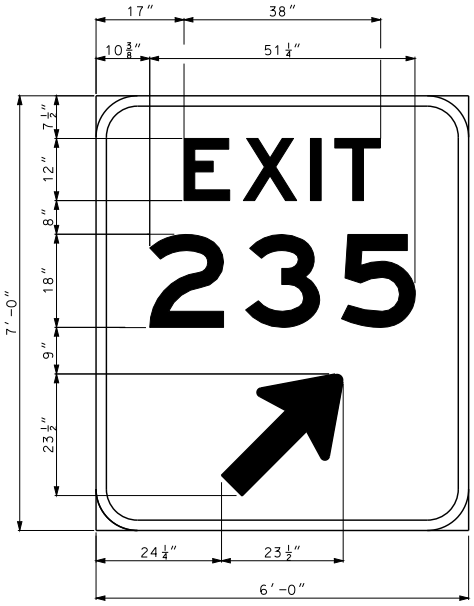

BORDER (ALL SIGNS)			
CORNER RADII		WIDTH	
SIGN HEIGHT	INCHES	LETTER SIZE	INCHES
LESS THAN OR EQUAL TO 6′	6	LESS THAN 12″	1
7′	9		
GREATER THAN OR EQUAL TO 8′	12	12″ OR LARGER	2

GENERAL SIGN DATA					
		REFL. SHEETING TYPE			
STR2L-3	TYPE	GROUND	OVERHEAD	COLOR	LETTER SERIES
BACKGROUND		R2	R2	GREEN	
LEGEND	L-3	R4	R4	WHITE	E(M)
SYMBOLS	L-3	R4	R4	VAR.	
BORDER	L-3	R4	R4	WHITE	
SUBSTRATE	STRUCTURAL				

SUBSTRATE

ST STRUCTURAL
SH SHEET

BACKGROUND REFLECTIVE SHEETING

R2 REFER TO MISSOURI SPECIFICATION SECTION 1042.2.7.2
R4 REFER TO MISSOURI SPECIFICATION SECTION 1042.2.7.3

GENERAL NOTE:

FOR MOUNTING DETAILS, SEE OTHER DRAWINGS.

LEGEND, SYMBOLS & BORDER

L-1 SCREEN PRINT, REVERSE SCREEN PRINT, OR OPAQUE OR TRANSLUCENT CUTABLE FILMS AS APPROVED BY ENGINEER BASED SIGN COLOR COMBINATION.

L-3 DIRECT APPLIED (CUT FROM MATERIAL SHOWN ON PLANS.)

MISSOURI HIGHWAYS AND TRANSPORTATION COMMISSION
105 WEST CAPITOL
JEFFERSON CITY, MO 65102
1-888-ASK-MODOT (1-888-275-6636)

STATE OF MISSOURI
EILEEN H. RICKERS
NUMBER PE-28338
PROFESSIONAL ENGINEER
THIS SHEET HAS BEEN SIGNED, SEALED AND DATED ELECTRONICALLY.

HIGHWAY SIGNING

GORE EXIT SIGN

DATE EFFECTIVE: 02/01/2012
DATE PREPARED: 12/22/2011

903.02AL

SHEET NO. 9 OF 19

IF A SEAL IS PRESENT ON THIS SHEET IT HAS BEEN ELECTRONICALLY SEALED AND DATED.

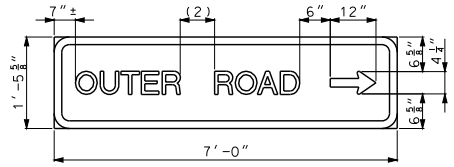

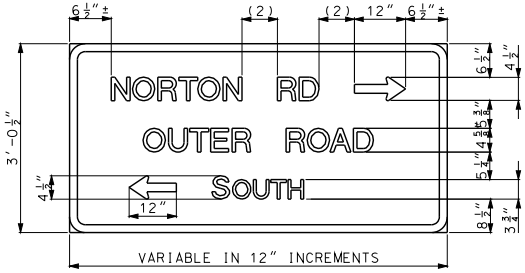

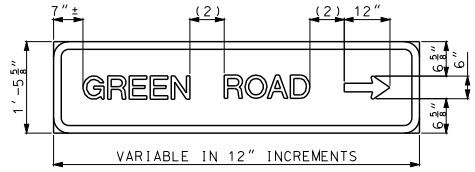

MAST ARM STREETNAME SIGNS

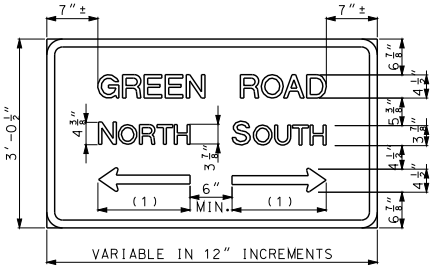

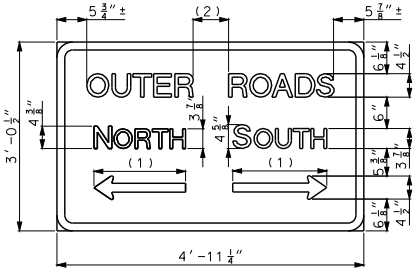

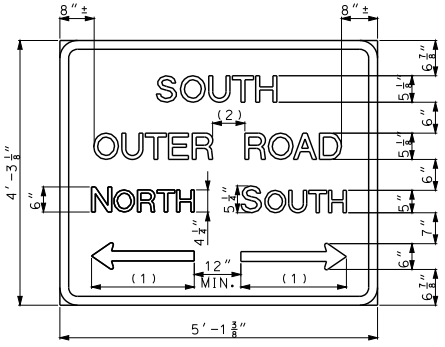

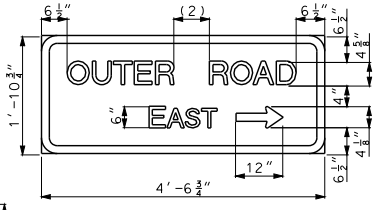

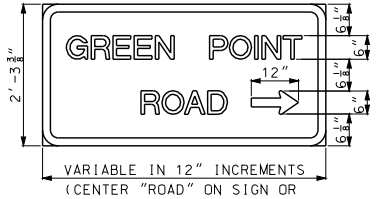

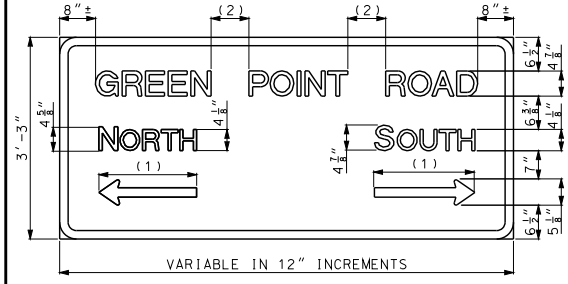

BORDER (ALL SIGNS)			
CORNER RADII		WIDTH	
SIGN HEIGHT	INCHES	LETTER SIZE	INCHES
LESS THAN OR EQUAL TO 6′	6	LESS THAN 12″	1
7′	9		
GREATER THAN OR EQUAL TO 8′	12	12″ OR LARGER	2

GENERAL NOTES:

SIGNS GREATER THAN 6′ WIDE OR 30 SQ. FT. IN AREA SHALL BE STRUCTURAL.

MAST ARM STREETNAME SIGNS SHALL BE FLAT SHEET.

FLAT SHEET FOR SIGNS SHALL BE THE FOLLOWING THICKNESS:

9 SQUARE FEET OR LESS – .080 IN..

OVER 9 SQUARE FEET BUT LESS THAN 16 SQUARE FEET – .100 IN..

16 SQUARE FEET OR LARGER – .125 IN.

FOR MOUNTING DETAILS, SEE OTHER DRAWINGS.

(1) ROUND ARROW LENGTH TO NEAREST 1″ INCREMENT.

(2) 1 TO 1.5 TIMES LETTER HEIGHT.

GENERAL SIGN DATA				
STR2L-3 SHR2L-3 SHR2L-1 STR2L-1	TYPE	REFLECTIVE SHEETING TYPE	COLOR	LETTER SERIES
BACKGROUND		R2	GR/WHT	
LEGEND	L-1(3)	R4	WHITE	D
SYMBOLS	L-1(3)	R4	WHITE	
BORDER	L-1(3)	R4	WHITE	
SUBSTRATE	SHEET (SEE GENERAL NOTES)			

SUBSTRATE

ST STRUCTURAL
SH SHEET

LEGEND, SYMBOLS & BORDER

L-1 SCREEN PRINT, REVERSE SCREEN PRINT, OR OPAQUE OR TRANSLUCENT CUTABLE FILMS AS APPROVED BY ENGINEER BASED SIGN COLOR COMBINATION.

L-3 DIRECT APPLIED (CUT FROM MATERIAL SHOWN ON PLANS.)

BACKGROUND REFLECTIVE SHEETING

R2 REFER TO MISSOURI SPECIFICATION SECTION 1042.2.7.2
R4 REFER TO MISSOURI SPECIFICATION SECTION 1042.2.7.3

CROSS ROAD AND OUTER ROAD SIGNS

MISSOURI HIGHWAYS AND TRANSPORTATION COMMISSION
105 WEST CAPITOL
JEFFERSON CITY, MO 65102
1-888-ASK-MODOT (1-888-275-6636)

STATE OF MISSOURI
ELSEN H. RICKERS
NUMBER PE-28338
PROFESSIONAL ENGINEER
THIS SHEET HAS BEEN SIGNED, SEALED AND DATED ELECTRONICALLY.

HIGHWAY SIGNING

CROSS ROAD AND
OUTER ROAD SIGNS

DATE EFFECTIVE: 02/01/2012
DATE PREPARED: 12/22/2011

903.02AL

SHEET NO.
10 OF 19

IF A SEAL IS PRESENT ON THIS SHEET IT HAS BEEN ELECTRONICALLY SEALED AND DATED.

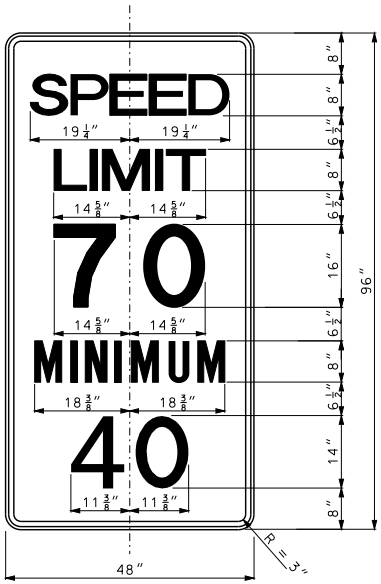

R2-4a

FOR USE ON INTERSTATE ONLY

GENERAL SIGN DATA: R2-4a				
SHR2L-1	TYPE	REFLECTIVE SHEETING TYPE	COLOR	LETTER SERIES
BACKGROUND		R2	WHITE	
LEGEND	L-1		BLACK	C
SYMBOLS	L-1		BLACK	
BORDER	L-1		BLACK	
SUBSTRATE	SHEET			

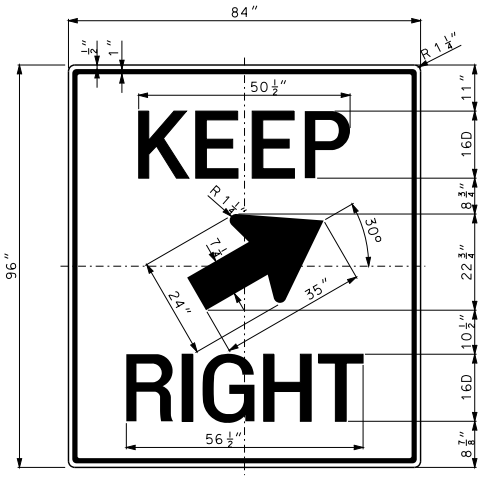

(3) SIGN R4-7d SHALL BE STRUCTURAL

R4-7d
KEEP RIGHT
(WITH 30° ARROW)
FREEWAY/EXPRESSWAY

GENERAL SIGN DATA: R4-7b				
STR2L-1	TYPE	REFLECTIVE SHEETING TYPE	COLOR	LETTER SERIES
BACKGROUND		R2	WHITE	
LEGEND	L-1		BLACK	D
SYMBOLS	L-1		BLACK	
BORDER	L-1		BLACK	
SUBSTRATE	STRUCTURE			

LEGEND, SYMBOLS & BORDER

L-1 SCREEN PRINT, REVERSE SCREEN PRINT, OR OPAQUE OR TRANSLUCENT CUTABLE FILMS AS APPROVED BY ENGINEER BASED ON SIGN COLOR COMBINATION.

L-3 DIRECT APPLIED (CUT FROM MATERIAL SHOWN ON PLANS.)

BACKGROUND REFLECTIVE SHEETING

R2 REFER TO MISSOURI SPECIFICATION SECTION 1042.2.7.2

GENERAL NOTES:

FLAT SHEET FOR SIGNS SHALL BE THE FOLLOWING THICKNESS (EXCEPT FOR 36" STOP SIGN THAT USES AN .100 ALUMINUM PLATE):

9 SQUARE FEET OR LESS - .080 IN.,

OVER 9 SQUARE FEET TO 16 SQUARE FEET - .100 IN.,

16 SQUARE FEET OR LARGER - .125 IN.

FOR MOUNTING DETAILS, SEE OTHER DRAWINGS.

MISSOURI HIGHWAYS AND TRANSPORTATION COMMISSION
105 WEST CAPITOL
JEFFERSON CITY, MO 65102
1-888-ASK-MODOT (1-888-275-6636)

STATE OF MISSOURI
EILEEN H. RICKERS
NUMBER PE-28338
PROFESSIONAL ENGINEER
THIS SHEET HAS BEEN SIGNED, SEALED AND DATED ELECTRONICALLY.

HIGHWAY SIGNING

REGULATORY SIGNS

DATE EFFECTIVE: 02/01/2012
DATE PREPARED: 12/22/2011

903.02AL

SHEET NO. 11 OF 19

IF A SEAL IS PRESENT ON THIS SHEET IT HAS BEEN ELECTRONICALLY SEALED AND DATED.

GENERAL SIGN DATA; FLAT SHEET			
SHR4L-1	TYPE	REFLECTIVE SHEETING TYPE	COLOR
BACKGROUND		R4	FL. YL
LEGEND	L-1		BLACK
SYMBOLS	L-1		BLACK
BORDER	L-1		BLACK

GENERAL SIGN DATA; STRUCTURE			
STR4L-1	TYPE	REFLECTIVE SHEETING TYPE	COLOR
BACKGROUND		R4	FL. YL
LEGEND	L-1		BLACK
SYMBOLS	L-1		BLACK
BORDER	L-1		BLACK

LEGEND, SYMBOLS & BORDER

L-1 SCREEN PRINT, REVERSE SCREEN PRINT, OR OPAQUE OR TRANSLUCENT CUTABLE FILMS AS APPROVED BY ENGINEER BASED ON SIGN COLOR COMBINATION.

L-3 DIRECT APPLIED (CUT FROM MATERIAL SHOWN ON PLANS.)

BACKGROUND REFLECTIVE SHEETING

R4 REFER TO MISSOURI SPECIFICATION SECTION 1042.2.7

SUBSTRATE

SH FLAT SHEET

ST EXTRUDED PANEL

GENERAL NOTES:

FLAT SHEET FOR SIGNS SHALL BE THE FOLLOWING THICKNESS

9 SQUARE FEET OR LESS - .080 IN..

OVER 9 SQUARE FEET TO 16 SQUARE FEET - .100 IN..

16 SQUARE FEET OR LARGER - .125 IN.

FOR MOUNTING DETAILS, SEE OTHER DRAWINGS.

MISSOURI HIGHWAYS AND TRANSPORTATION COMMISSION
105 WEST CAPITOL
JEFFERSON CITY, MO 65102
1-888-ASK-MODOT (1-888-275-6636)

STATE OF MISSOURI
EILEEN H. RICKERS
NUMBER PE-28336
PROFESSIONAL ENGINEER
THIS SHEET HAS BEEN SIGNED, SEALED AND DATED ELECTRONICALLY.

HIGHWAY SIGNING

WARNING SIGNS

DATE EFFECTIVE: 02/01/2011
DATE PREPARED: 12/22/2011

903.02AL

SHEET NO. 12 OF 19

IF A SEAL IS PRESENT ON THIS SHEET IT HAS BEEN ELECTRONICALLY SEALED AND DATED.

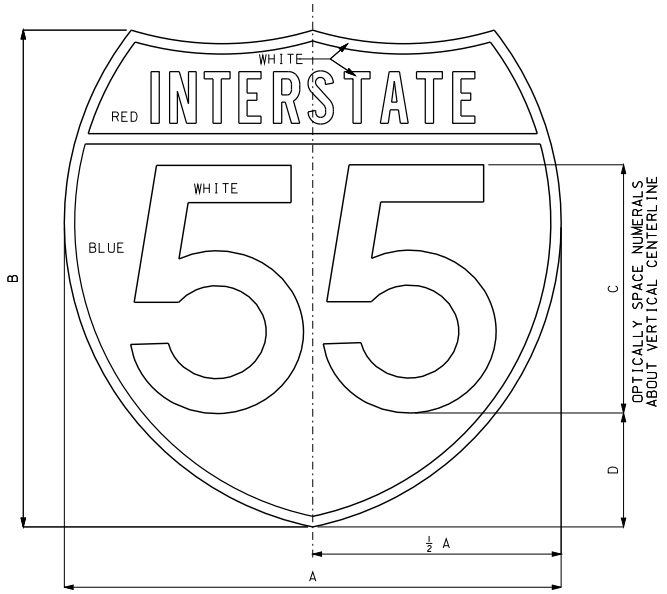

FOR GUIDE SIGN USE

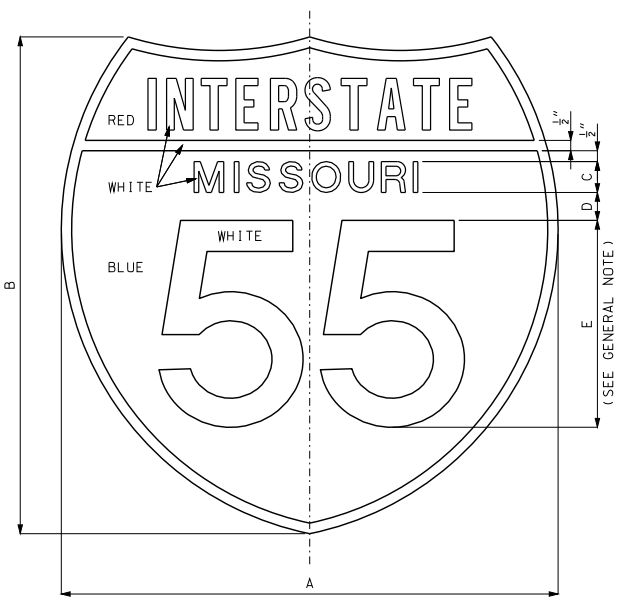

FOR INDEPENDENT USE

INTERSTATE SHIELD

LOCATION	SIGN	DIMENSIONS (INCHES)			
		A	B	C	D
CROSSROAD	1,2-DIGITS	24	24	12D	5½
OVERHEAD	1,2-DIGITS	36	36	18D	8¼
GROUND MOUNT	1,2-DIGITS	48	48	24D	11
CROSSROAD	3-DIGITS	30	24	12D	5½
OVERHEAD	3-DIGITS	45	36	18D	8¼
GROUND MOUNT	3-DIGITS	60	48	24D	11

DIMENSIONS FOR GUIDE SIGN, BUSINESS LOOP OR SPUR SHIELDS

GUIDE SIGN				
GENERAL SIGN DATA				
	TYPE	REFLECTIVE SHEETING TYPE	COLOR	LETTER SERIES
BACKGROUND	L-1	R4	VAR.	
LEGEND	L-1 *		WHITE	VAR **
SYMBOLS				
BORDER	L-1 *		WHITE	
SUBSTRATE				

* REVERSE SCREEN PROCESS.
** SEE DIMENSION TABLES THIS DRAWING.

SIGN	DIMENSIONS (INCHES)				
	A	B	C	D	E
1 & 2 DIGITS	24	24	1½ D	1⅜	10D
3 DIGITS	30	24	1½ D	2¼	10D

DIMENSIONS FOR INDEPENDENT USE SHIELD

INDEPENDENT				
GENERAL SIGN DATA				
SHR2L-1	TYPE	REFLECTIVE SHEETING TYPE	COLOR	LETTER SERIES
BACKGROUND	L-1	R2	VAR.	
LEGEND	L-1 *		WHITE	VAR **
SYMBOLS				
BORDER	L-1 *		WHITE	
SUBSTRATE	SHEET			

* REVERSE SCREEN PROCESS.
** SEE DIMENSION TABLES THIS DRAWING.

LEGEND, SYMBOLS & BORDER

L-1 SCREEN PRINT, REVERSE SCREEN PRINT, OR OPAQUE OR TRANSLUCENT CUTABLE FILMS AS APPROVED BY ENGINEER BASED ON SIGN COLOR COMBINATION.

SUBSTRATE

ST STRUCTURAL
SH SHEET

BACKGROUND REFLECTIVE SHEETING

R2 REFER TO MISSOURI SPECIFICATION SECTION 1042.2.7.2
R4 REFER TO MISSOURI SPECIFICATION SECTION 1042.2.7.3

GENERAL NOTES:

ALL SHIELDS FOR GUIDE SIGN USE SHALL BE SCREEN PROCESS OR ELECTRONIC CUTABLE FILM ON REFLECTIVE SHEETING IN ACCORDANCE WITH SEC 1042.2.7.3.

FOR HOLE PUNCHING AND MOUNTING DETAILS SEE OTHER DRAWINGS.

OCCASSIONALLY THE NUMERALS CANNOT BE ACCOMODATED WITHIN THE SPACE AVAILABLE ON THE STANDARD SHIELD. FOR THESE SITUATIONS, THE STANDARD SERIES D NUMERAL MAY BE REDUCED TO SERIES C, OR HORIZONTALLY COMPRESSED
BY MEANS OF SIGNING SOFTWARE AS DIRECTED BY THE ENGINEER.

ALL SIGNS ON THIS SHEET ARE TO BE FABRICATED FROM .080 IN. SHEET ALUMINUM, UNLESS OTHERWISE SHOWN.

MoDOT
MISSOURI HIGHWAYS AND TRANSPORTATION COMMISSION
105 WEST CAPITOL
JEFFERSON CITY, MO 65102
1-888-ASK-MODOT (1-888-275-6636)

STATE OF MISSOURI
ELEEN H. RACKERS
NUMBER PE-28336
PROFESSIONAL ENGINEER
THIS SHEET HAS BEEN SIGNED, SEALED AND DATED ELECTRONICALLY.

HIGHWAY SIGNING

SHIELD FOR INDEPENDENT AND GUIDE SIGN USE

DATE EFFECTIVE: 02/01/2012
DATE PREPARED: 12/22/2011

903.02AL

IF A SEAL IS PRESENT ON THIS SHEET IT HAS BEEN ELECTRONICALLY SEALED AND DATED.

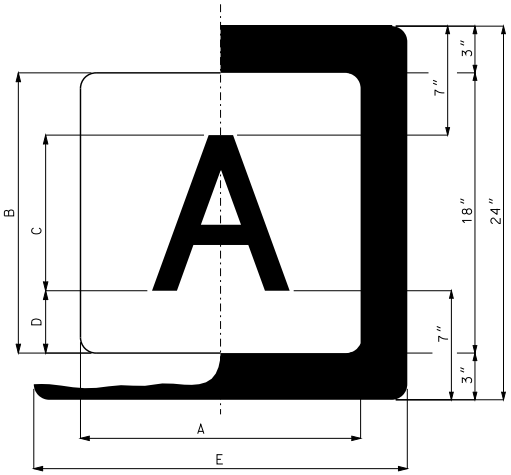

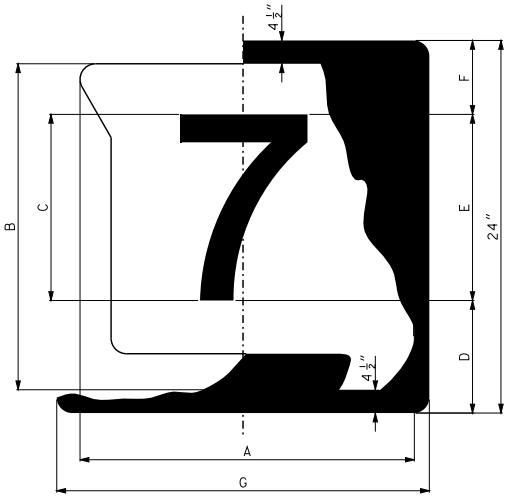

GUIDE SIGN			
GENERAL SIGN DATA			
	COLOR	REFLECTIVE SHEETING TYPE	LETTER SERIES
BACKGROUND	WHITE	R4	
LEGEND	BLACK		VAR ✳
SYMBOLS	WHITE		

INDEPENDENT			
GENERAL SIGN DATA			
SHR2L-1	COLOR	REFLECTIVE SHEETING TYPE	LETTER SERIES
BACKGROUND	WHITE	R2	
LEGEND	BLACK		VAR ✳
SYMBOLS	WHITE		
BORDER	BLACK		
SUBSTRATE	SHEET		

✳ SEE DIMENSION TABLES THIS DRAWING.

SUBSTRATE

ST STRUCTURAL
SH SHEET

LEGEND, SYMBOLS & BORDER

L-1 SCREEN PRINT, REVERSE SCREEN PRINT, OR OPAQUE OR TRANSLUCENT CUTABLE FILMS AS APPROVED BY ENGINEER BASED ON SIGN COLOR COMBINATION.

BACKGROUND REFLECTIVE SHEETING

R2 REFER TO MISSOURI SPECIFICATION SECTION 1042.2.7.2
R4 REFER TO MISSOURI SPECIFICATION SECTION 1042.2.7.3

LOCATION	NO. OF LETTERS	DIMENSIONS (INCHES) FOR GUIDE SIGN USE			
		A	B	C	D
CROSSROAD	1	24	24	12D	6
CROSSROAD	2	30	24	12D	6
OVERHEAD	1	30	30	18D	6
OVERHEAD	2	36	30	18D	6
GROUND MOUNT	1	42	42	24D	9
GROUND MOUNT	2	48	42	24D	9

NUMBER OF LETTERS	DIMENSIONS (INCHES) FOR INDEPENDENT USE	
	C	E
1	12D	24
2	12C	30

SUPPLEMENTARY SHIELD

LOCATION	ROUTE NUMBER	DIMENSIONS (INCHES) FOR GUIDE SIGN USE		
		A	B	C
CROSSROAD	1 & 2 DIGITS	24	24	12D
OVERHEAD	1 & 2 DIGITS	36	36	18C
GROUND MOUNT	1 & 2 DIGITS	48	48	24D
CROSSROAD	3 DIGITS	30	24	12C
OVERHEAD	3 DIGITS	45	36	18D
GROUND MOUNT	3 DIGITS	60	48	24D

ROUTE NUMBER	DIMENSIONS (INCHES) FOR INDEPENDENT USE			
	D	E	F	G
1 & 2 DIGIT	7¼	12D	4¾	24
3 DIGIT	8¼	12 B OR C	5¾	30

STATE ROUTE SHIELD

GENERAL NOTES:

ALL SHIELDS FOR GUIDE SIGN USE SHALL BE SCREEN PROCESS OR CUTTABLE FILM ON REFLECTIVE SHEETING IN ACCORDANCE WITH SEC 1042.2.7.3.

ALL SHIELDS FOR INDEPENDENT SIGN USE SHALL BE SCREEN PROCESS OR CUTTABLE FILM ON REFLECTIVE SHEETING IN ACCORDANCE WITH SEC 1042.2.7.2.

FOR HOLE PUNCHING AND MOUNTING DETAILS SEE OTHER DRAWINGS.

LAYOUT OF MISSOURI SHIELDS ARE AVAILABLE UPON REQUEST.

OCCASIONALLY THE NUMERALS CANNOT BE ACCOMMODATED WITHIN THE SPACE AVAILABLE ON THE STANDARD SHIELD. FOR THESE SITUATIONS, THE STANDARD SERIES D NUMERAL MAY BE REDUCED TO SERIES C, OR HORIZONTALLY COMPRESSED BY MEANS OF SIGNING SOFTWARE AS DIRECTED BY THE ENGINEER.

ALL SIGNS ON THIS SHEET ARE TO BE FABRICATED FROM .080 IN. SHEET ALUMINUM, UNLESS OTHERWISE SHOWN.

MISSOURI HIGHWAYS AND TRANSPORTATION COMMISSION
105 WEST CAPITOL
JEFFERSON CITY, MO 65102
1-888-ASK-MODOT (1-888-275-6636)

STATE OF MISSOURI
EILEEN H. RACKERS
NUMBER PE-28338
PROFESSIONAL ENGINEER
THIS SHEET HAS BEEN SIGNED, SEALED AND DATED ELECTRONICALLY.

HIGHWAY SIGNING
STANDARD SHIELDS FOR INDEPENDENT AND GUIDE SIGN USE

DATE EFFECTIVE: 02/01/2012
DATE PREPARED: 12/22/2011

903.02AL

SHEET NO. 14 OF 19

IF A SEAL IS PRESENT ON THIS SHEET IT HAS BEEN ELECTRONICALLY SEALED AND DATED.

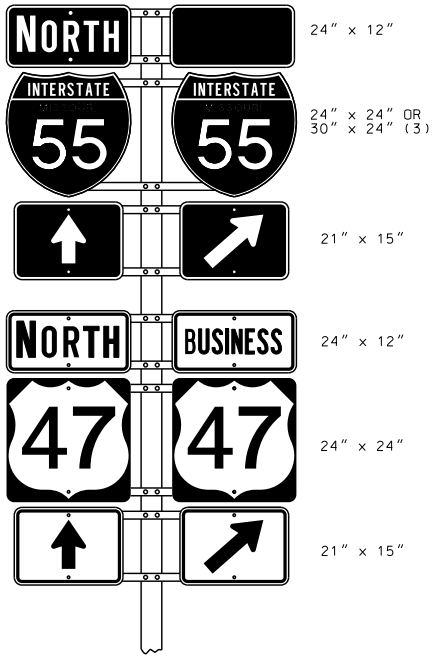

TWO-ROUTE ASSEMBLY

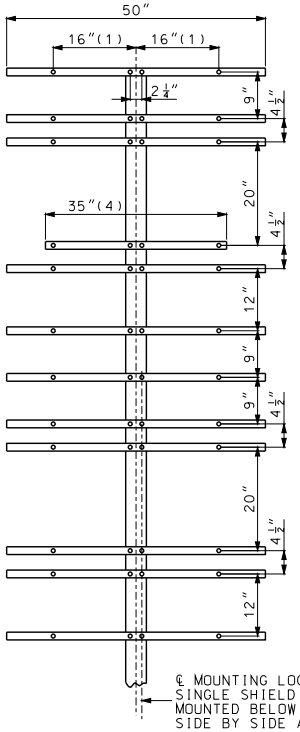

℄ MOUNTING LOCATION FOR
SINGLE SHIELD ASSEMBLY
MOUNTED BELOW (OR ABOVE)
SIDE BY SIDE ASSEMBLIES

(1) FOR 30" x 24" SHIELD, DIMENSION WILL BE 22".
(2) FULL SIZE BARS SHALL BE USED WHEN INTERSTATE SHIELD IS NOT USED. VERTICAL SPACING OF BARS SHALL BE THE SAME AS FOR A SINGLE POST ASSEMBLY.
(3) 24" x 24" SHALL BE USED FOR 1 OR 2 DIGIT ROUTE SHIELDS.
(4) FOR SIDE BY SIDE 30" x 24" SHIELDS, DIMENSION WILL BE 41".

NOTE: 1ST DIMENSION - WIDTH OF PLATE
2ND DIMENSION - HEIGHT OF PLATE

ONE POST
(WITH BARS)

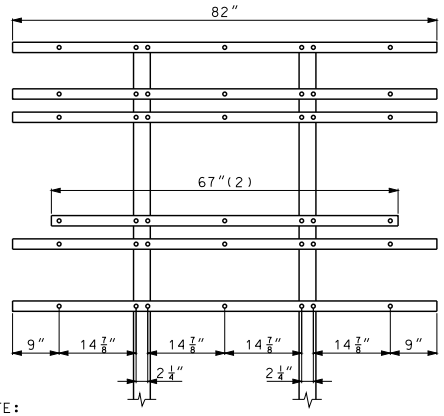

NOTE:
ASSEMBLIES WITH TWO-ROUTE SHIELDS MOUNTED BELOW THREE-ROUTE SHIELDS SHALL BE MOUNTED TO THE POST AS SHOWN IN ONE-POST WITH BARS, DRAWING ABOVE.

TWO POSTS

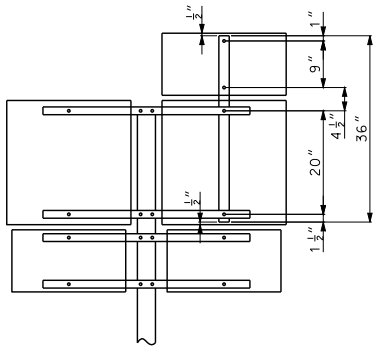

AUXILIARY PLATE MOUNTING

WIDE FLANGE POST MOUNTING

GENERAL NOTES:

ALL BARS SHALL BE 2"x 3/8" STEEL, GALVANIZED AFTER PUNCHING.
WEIGHT = 2.55 LBS. PER FOOT. HOLES IN BARS SHALL BE 3/4" AND SHALL BE PUNCHED AS SHOWN ON THIS DRAWING.
BACKING BARS PAID FOR AS STRUCTURAL STEEL, PER POUND.

FOR POST AND FOOTING DATA AND DETAILS OF SHIELDS AND PLAQUES, SEE OTHER DRAWINGS.

MISSOURI HIGHWAYS AND TRANSPORTATION COMMISSION
105 WEST CAPITOL
JEFFERSON CITY, MO 65102
1-888-ASK-MODOT (1-888-275-6636)

STATE OF MISSOURI
EILEEN H. RICKERS
NUMBER PE-28338
PROFESSIONAL ENGINEER
THIS SHEET HAS BEEN SIGNED, SEALED AND DATED ELECTRONICALLY.

HIGHWAY SIGNING
BACKING BARS
SHEET SIGN MOUNTING
ROUTE SHIELD AND
MARKER ASSEMBLIES

DATE EFFECTIVE: 02/01/2012
DATE PREPARED: 12/22/2011

903.02AL

SHEET NO.
15 OF 19

IF A SEAL IS PRESENT ON THIS SHEET IT HAS BEEN ELECTRONICALLY SEALED AND DATED.

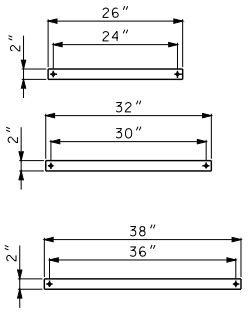

THE THREE BACKING BAR LAYOUTS
FOR SINGLE POST SIGNS

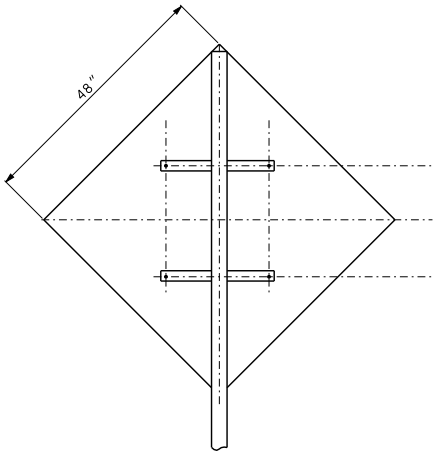

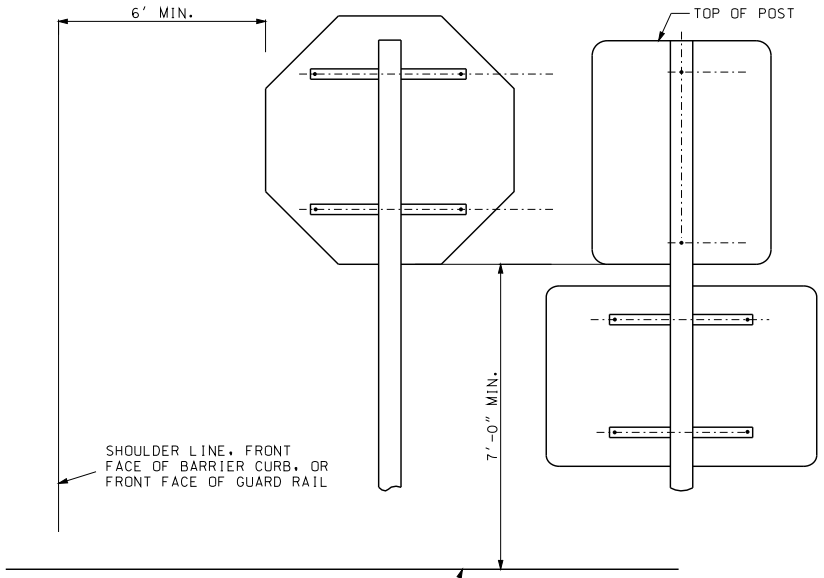

HOLES IN BACKING BARS SHALL BE $\frac{9}{16}$″ AND PUNCHED AS SHOWN ON THIS DRAWING.

IF A SEAL IS PRESENT ON THIS SHEET IT HAS BEEN ELECTRONICALLY SEALED AND DATED.

MISSOURI HIGHWAYS AND TRANSPORTATION COMMISSION
105 WEST CAPITOL
JEFFERSON CITY, MO 65102
1-888-ASK-MODOT (1-888-275-6636)

STATE OF MISSOURI
EILEEN H. RICKERS
NUMBER PE-28336
PROFESSIONAL ENGINEER
THIS SHEET HAS BEEN SIGNED, SEALED AND DATED ELECTRONICALLY.

HIGHWAY SIGNING

BACKING BARS DETAILS

DATE EFFECTIVE: 02/01/2012
DATE PREPARED: 12/22/2011

903.02AL

SHEET NO.
16 OF 19

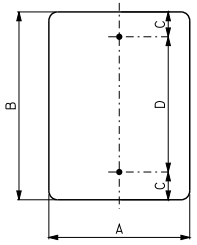

DIMENSIONS (IN.)			
A	B	C	D
6	15	1.5	12
8	24	3	18
9	12	1.5	9
9	48	3	42
10	30	3	24
12	18	3	12
12	24	3	18
12	36	3	30
12	48	3	42
18	24	3	18
24	30	3	24
24	36	3	30
30	36	3	30
30	42	3	36
30	48	3	42

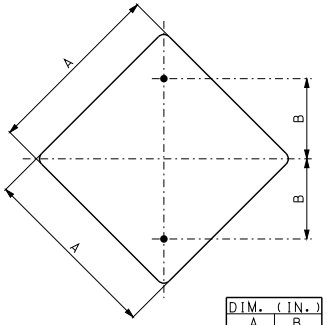

DIM. (IN.)	
A	B
18	9
24	12
30	15
36	18

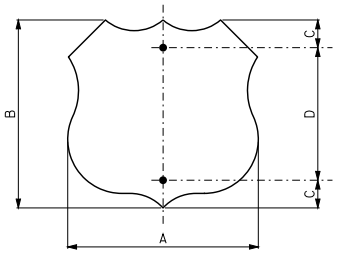

DIMENSIONS (IN.)			
A	B	C	D
24	24	3	18
30	24	3	18
36	36	6	24
45	36	6	24

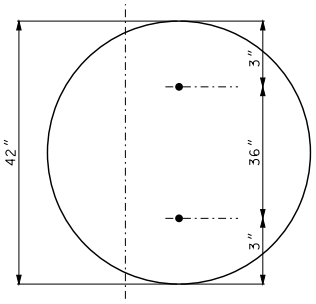

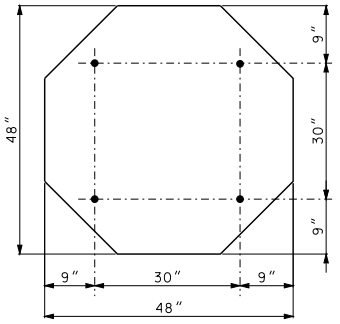

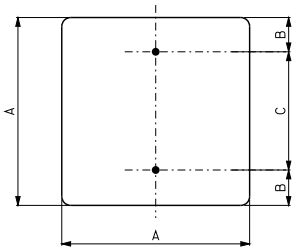

DIMENSIONS (IN.)		
A	B	C
14	3	8
18	3	12
24	3	18
30	3	24

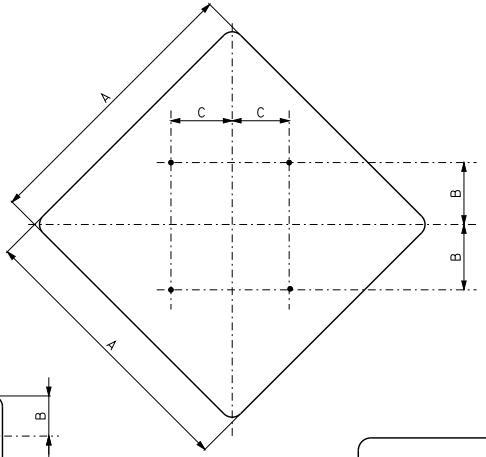

DIMENSIONS (IN.)		
A	B	C
48	15	15
60	18	18

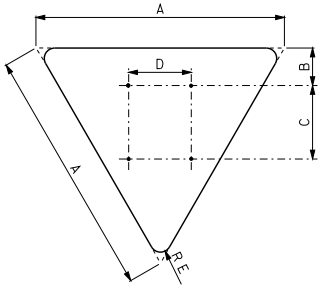

DIMENSIONS (IN.)				
A	B	C	D	E
48	3	12	12	3
60	4	18	15	3

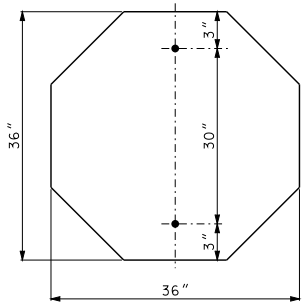

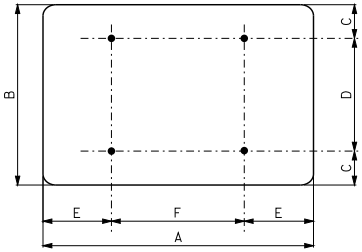

DIMENSIONS (IN.)					
A	B	C	D	E	F
36	24	3	18	6	24
36	30	3	24	6	24
42	30	3	24	6	30
42	36	3	30	6	30
48	12	1.5	9	9	30
48	18	1.5	15	9	30
48	24	3	18	9	30
48	30	3	24	9	30
48	36	3	30	9	30
60	12	1.5	9	12	36
60	24	3	18	12	36
60	36	6	24	12	36

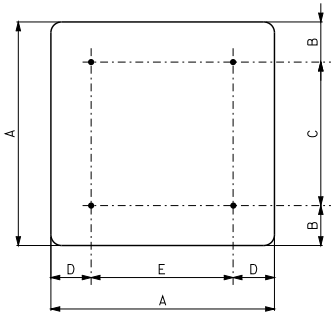

DIMENSIONS (IN.)				
A	B	C	D	E
36	6	24	6	24
48	6	36	9	30

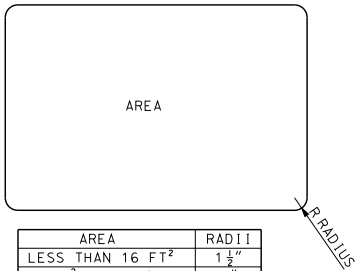

AREA	RADII
LESS THAN 16 FT²	1½″
16 FT² OR GREATER	3″

RADII FOR SHEET SIGNS

GENERAL NOTES:

SIGNS WITH FOUR OR MORE HOLES REQUIRE BACKING BARS OR MULTIPLE POSTS.

HOLES IN SIGNS SHALL BE $\frac{3}{8}$″ AND PUNCHED AS SHOWN ON THIS DRAWING.

FLAT SHEET FOR SIGNS SHALL BE THE FOLLOWING THICKNESS:

9 SQUARE FEET OR LESS – .080 IN.,

OVER 9 SQUARE FEET BUT LESS THAN 16 SQUARE FEET – .100 IN.,

16 SQUARE FEET OR LARGER – .125 IN.

FOR MOUNTING DETAILS, SEE OTHER DRAWINGS.

MISSOURI HIGHWAYS AND TRANSPORTATION COMMISSION
105 WEST CAPITOL
JEFFERSON CITY, MO 65102
1-888-ASK-MODOT (1-888-275-6636)

STATE OF MISSOURI
EILEEN H. RACKERS
NUMBER PE-28338
PROFESSIONAL ENGINEER
THIS SHEET HAS BEEN SIGNED, SEALED AND DATED ELECTRONICALLY.

HIGHWAY SIGNING

HOLE PUNCHING

DATE EFFECTIVE: 02/01/2012
DATE PREPARED: 12/22/2011

903.02AL

SHEET NO. 17 OF 19

IF A SEAL IS PRESENT ON THIS SHEET IT HAS BEEN ELECTRONICALLY SEALED AND DATED.

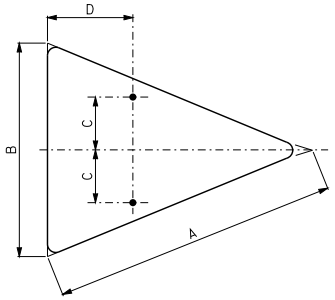

DIMENSIONS (IN.)			
A	B	C	D
40	30	7.5	12
48	36	9	15

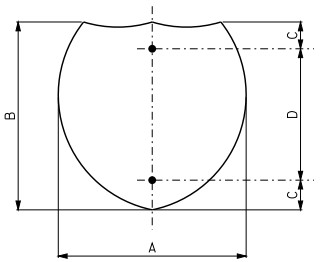

DIMENSIONS (IN.)			
A	B	C	D
24	24	3	18
30	24	3	18
36	36	6	24
45	36	6	24

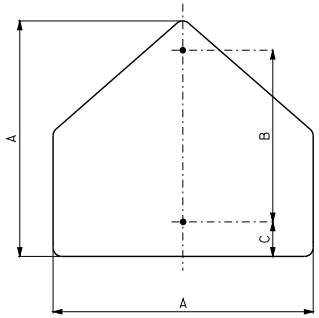

DIMENSIONS (IN.)		
A	B	C
36	24	3

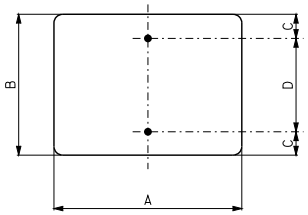

DIMENSIONS (IN.)			
A	B	C	D
5	9	1.5	6
12	9	1.5	6
14	12	1.5	9
18	12	1.5	9
20	9	1.5	6
21	15	1.5	12
24	6	1.5	3
24	8	1.5	5
24	10	1.5	7
24	12	1.5	9
24	18	3	12
30	6	1.5	3
30	12	1.5	9
30	15	1.5	12
30	18	3	12
30	24	3	18
36	12	1.5	9
36	18	3	12

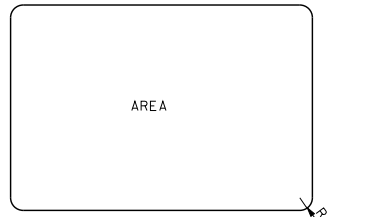

AREA	RADII
LESS THAN 16 FT^2	1 1/2"
16 FT^2 OR GREATER	3"

RADII FOR SHEET SIGNS

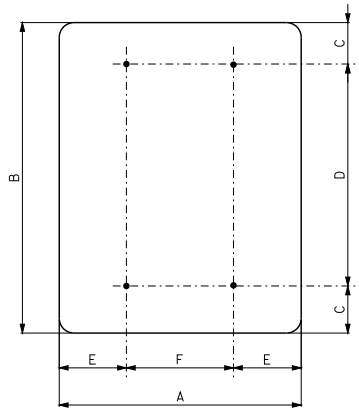

DIMENSIONS (IN.)					
A	B	C	D	E	F
36	48	6	36	6	24
36	54	6	42	6	24
48	60	6	48	9	30

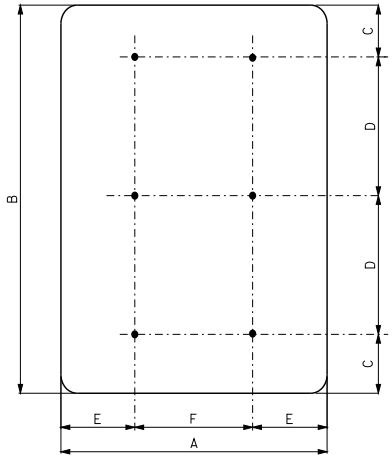

DIMENSIONS (IN.)					
A	B	C	D	E	F
48	96	6	42	9	30

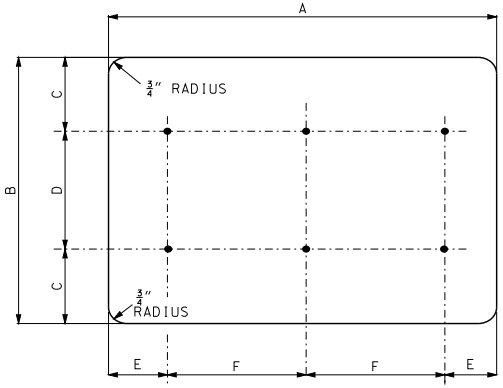

DIMENSIONS (IN.)					
A	B	C	D	E	F
96	48	6	36	16	32

GENERAL NOTES:

FLAT SHEET FOR SIGNS SHALL BE THE FOLLOWING THICKNESS:

9 SQUARE FEET OR LESS - .080 IN.,

OVER 9 SQUARE FEET BUT LESS THAN 16 SQUARE FEET - .100 IN.,

16 SQUARE FEET OR LARGER - .125 IN.

FOR MOUNTING DETAILS, SEE OTHER DRAWINGS.

HOLES IN SIGNS SHALL BE 3/8" AND PUNCHED AS SHOWN ON THIS DRAWING.

SIGNS WITH FOUR OR MORE HOLES REQUIRE BACKING BARS OR MULTIPLE POSTS.

MISSOURI HIGHWAYS AND TRANSPORTATION COMMISSION
105 WEST CAPITOL
JEFFERSON CITY, MO 65102
1-888-ASK-MODOT (1-888-275-6636)

STATE OF MISSOURI
EILEEN H. RICKERS
NUMBER PE-28338
PROFESSIONAL ENGINEER
THIS SHEET HAS BEEN SIGNED, SEALED AND DATED ELECTRONICALLY.

HIGHWAY SIGNING

HOLE PUNCHING

DATE EFFECTIVE: 02/01/2012
DATE PREPARED: 12/22/2011

903.02AL

SHEET NO. 18 OF 19

IF A SEAL IS PRESENT ON THIS SHEET IT HAS BEEN ELECTRONICALLY SEALED AND DATED.

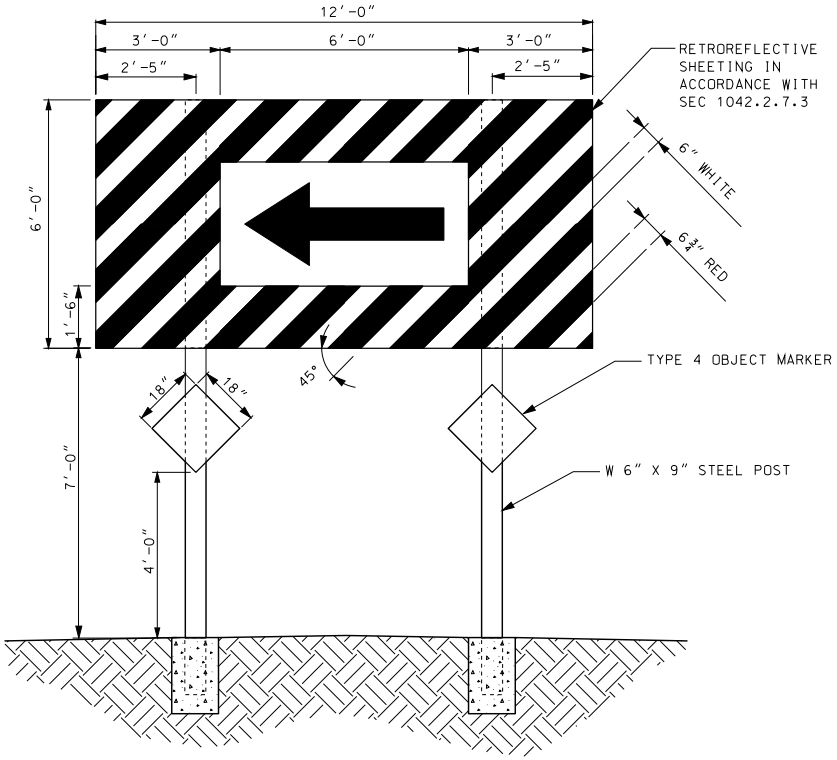

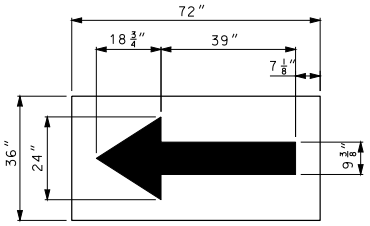

W1-6

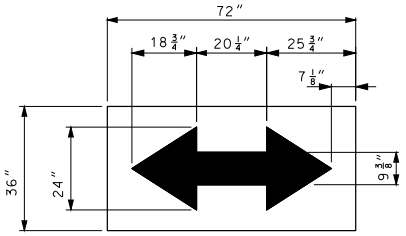

W1-7

GENERAL NOTES:

SIGN BARRICADE SHALL BE CLASSIFIED AS STR4L-3 DESIGNATION.

WHERE A BARRICADE EXTENDS ACROSS A ROADWAY, THE STRIPES SHALL SLOPE DOWNWARD IN THE DIRECTION TOWARD WHICH TRAFFIC MUST TURN OR PASS.

WHERE BOTH RIGHT AND LEFT VEHICULAR MOVEMENTS ARE PROVIDED, THE BARRICADE STRIPES SHALL SLOPE DOWNWARD IN BOTH DIRECTIONS FROM THE CENTER OF THE BARRICADE.

WHERE VEHICULAR MOVEMENTS ARE NOT PROVIDED, THE STRIPES SHALL SLOPE DOWNWARD TOWARD THE CENTER OF THE BARRICADE.

ALL REFLECTORIZED SURFACES SHALL BE RETROREFLECTIVE SHEETING IN ACCORDANCE WITH SEC 1042.2.7.3.

SEE STANDARD PLAN 903.03 FOR BREAKAWAY ASSEMBLY AND TYPE 4 OBJECT MARKER.

MISSOURI HIGHWAYS AND TRANSPORTATION COMMISSION
105 WEST CAPITOL
JEFFERSON CITY, MO 65102
1-888-ASK-MODOT (1-888-275-6636)

STATE OF MISSOURI
ELEEN H. RACKERS
NUMBER PE-28336
PROFESSIONAL ENGINEER
THIS SHEET HAS BEEN SIGNED, SEALED AND DATED ELECTRONICALLY.

SIGN BARRICADE

DATE EFFECTIVE: 02/01/2012 DATE PREPARED: 12/22/2011	903.02AL	SHEET NO. 19 OF 19	

IF A SEAL IS PRESENT ON THIS SHEET IT HAS BEEN ELECTRONICALLY SEALED AND DATED.

STRUCTUAL STEEL POST FOR GROUND MOUNTED SIGNS

POST DES. NO.*	NOM SIZE (IN.)(LBS/FT)	TORQUE AND HIGH STRENGTH BOLTS	BASE CONNECTION DATA TABLE (IN.) A	B	C	D	E	F	G	W	R
1	W6x9	$\frac{5}{8}$" ROUND x 2$\frac{3}{4}$" 345 IN./LBS.	5	2	1$\frac{1}{4}$	2$\frac{3}{4}$	1$\frac{1}{8}$	$\frac{3}{4}$	$\frac{1}{2}$	$\frac{1}{4}$	11/32
2	W6x15										
3	W8x18										
4	W10x22	$\frac{3}{4}$" ROUND x 3$\frac{1}{2}$" 555 IN./LBS.	6	2$\frac{1}{4}$	1$\frac{3}{8}$	3$\frac{1}{2}$	1$\frac{1}{4}$	1	$\frac{3}{4}$	$\frac{5}{16}$	13/32
5	W10x26										
6	W12x35										

POST AND FOOTING DATA TABLE

POST DES. NO.*	NOM. SIZE	POST WEIGHT LBS/FT	POST WEIGHT LBS/IN	STUB LENGTH	FOOTING DIA.	LEVEL GROUND DEPTH	LEVEL GROUND C.Y.	6:1 GRADE DEPTH	6:1 GRADE C.Y.	4:1 GRADE DEPTH	4:1 GRADE C.Y.	3:1 OR 2:1 GRADE DEPTH	3:1 OR 2:1 GRADE C.Y.
1	W6	9.0	0.75	3'-0"	15"	3'-0"	0.14	3'-2"	0.15	3'-3"	0.16	3'-6"	0.17
2	W6	15.0	1.25	4'-0"	24"	4'-0"	0.47	4'-2"	0.50	4'-3"	0.51	4'-6"	0.54
3	W8	18.0	1.50	4'-6"	28"	4'-6"	0.71	4'-8"	0.73	4'-9"	0.74	5'-0"	0.78
4	W10	22.0	1.83	5'-0"	36"	5'-0"	1.31	5'-2"	1.36	5'-3"	1.39	5'-6"	1.45
5	W10	26.0	2.17	5'-0"	36"	5'-0"	1.31	5'-3"	1.37	5'-5"	1.43	5'-9"	1.52
6	W12	35.0	2.92	5'-6"	36"	5'-6"	1.44	5'-9"	1.52	5'-11"	1.56	6'-3"	1.65

SHEET METAL BOLT RETAINER CUT FROM 30 GAGE GALVANIZED SHEET METAL. PLACE BETWEEN BASE PLATES. SIZE VARIES TO FIT PLATE. BOLT HOLES TO BE $\frac{1}{16}$" LARGER THAN REQUIRED BOLT SIZE.

BOLT RETAINER

* FOR POST DESIGNS NUMBERS 3, 4, 5 AND 6 HAVING WEIGHTS GREATER THAN 18LBS./FT., POSTS SHALL BE SPACED AT LEAST 7' APART. FOR POST DESIGNS NUMBERS 1 AND 2, POSTS MAY BE SPACED LESS THAN 7' APART. DO NOT USE THREE NUMBER 1 OR 2 POSTS WITH A SIGN WIDTH OF LESS THAN 10'-6".

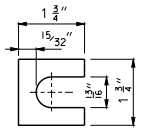

SHIM

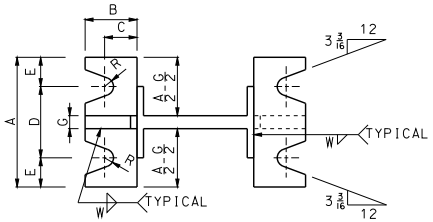

SECTION A-A SECTION B-B
POST AND FOOTING

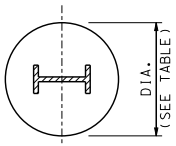

SECTION C-C

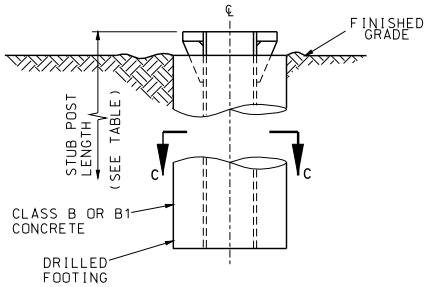

STUB DETAIL

STIFFENER PLATE

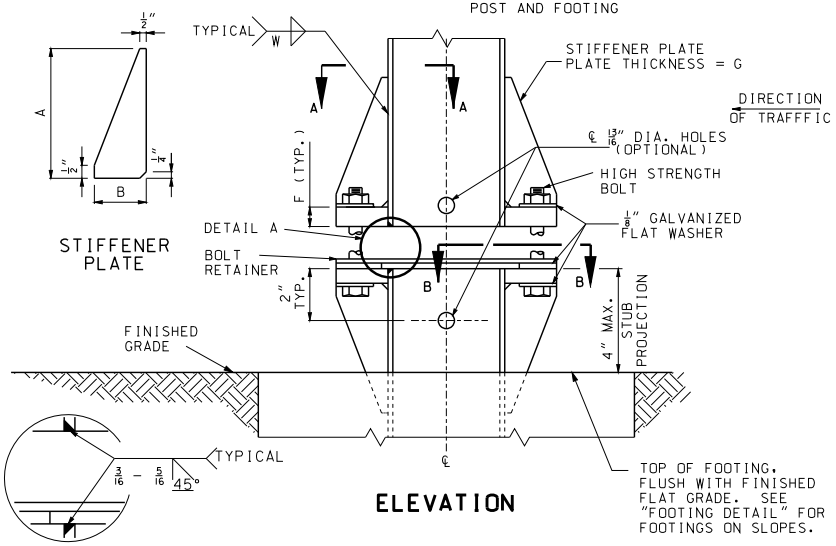

ELEVATION

DETAIL A

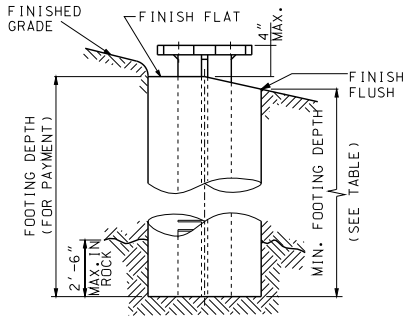

FOOTING DETAIL

GENERAL NOTES:

DESIGN SPECS: AASHTO STANDARD SPECIFICATIONS FOR STRUCTURAL SUPPORTS FOR HIGHWAY SIGNS. LUMINAIRES AND TRAFFIC SIGNALS - 1985 (EXCEPT 2001AND LATEST INTERIMS FOR STRUCTURAL STEEL POSTS).

POSTS, PERFORATED FUSE PLATE AND SPLICE PLATE TO BE GALVANIZED AFTER FABRICATION.

METAL PROJECTING BEYOND THE PLANE OF THE PLATE FACE WILL NOT BE ALLOWED.

REMOVE ALL GALVANIZING RUNS OR BEADS IN THE WASHER AREA.

ALL STRUCTURAL STEEL STIFFENER PLATES AND BASE PLATES, FOR GROUND MOUNTED SIGNS SHALL MEET THE REQUIREMENTS OF ASTM A 36 OR AASHTO M 270 GRADE 50, MINIMUM YIELD 50,000 PSI.

IN THE EVENT THE DISTANCE BETWEEN THE TOP OF THE FOOTING AND THE BOTTOM OF THE SIGN IS LESS THAN 7'-9", THE SIGN HEIGHT AND POST LENGTH IS TO BE INCREASED SUFFICIENTLY TO ACCOMMODATE THIS MINIMUM SPACING.

HINGE PLATES NOT REQUIRED ON SINGLE POST SIGNS OR ANY SIGNS USING PIPE POSTS.

NUTS ON HINGE PLATE BOLTS SHALL BE TIGHTENED TO THE REQUIRED MINIMUM BOLT TENSION VALUES SHOWN IN TABLE 1 SEC. 1080 OF THE STANDARD SPECIFICATIONS.

THE NUT SHALL BE FREE RUNNING. IF THE NUT WILL NOT SPIN ON THE BOLT BECAUSE OF GALVANIZING IRREGULARITIES, A LUBRICANT SHALL BE APPLIED.

ALL BREAKAWAY ASSEMBLY BOLTS SHALL BE TIGHTENED IN A SYSTEMATIC MANNER TO THE PRESCRIBED TORQUE SHOWN ON THIS DRAWING.

EACH BREAKAWAY ASSEMBLY BOLT SHALL BE LOOSENED AND RE-TIGHTENED TO THE REQUIRED TORQUE IN THE SAME ORDER AS THE INITIAL TIGHTENING.

THE THREADS SHALL BE BURRED AT THE NUT USING A CENTER PUNCH TO PREVENT NUT FROM LOOSENING.

POST LENGTH QUANTITY SHOWN ON PLANS INCLUDES STUB.

1" X 2$\frac{1}{2}$" HIGH STRENGTH BOLTS FOR PIPE POSTS SHALL BE OF THE DESIGNATION AASHTO M 164 OR ASTM A 449. ALL OTHER H.S. BOLTS SHALL BE OF THE DESIGNATION AASHTO M 164.

FURNISH TWO .012"± AND TWO .0032"± THICK SHIMS PER POST FROM BRASS SHIM STOCK OR STRIP, DESIGNATION ASTM B 36. SHIM AS REQUIRED TO PLUMB POST.

HIGH STRENGTH BOLTS WITH HEX NUT AND THREE WASHERS WITH EACH BOLT ARE TO BE GALVANIZED.

OPTIONAL HOLES ($\frac{13}{16}$" ROUND FOR "I" SHAPE POSTS AND $\frac{9}{16}$" ROUND FOR PIPE POST BASE PLATES) AS SHOWN IN "ELEVATIONS" ARE TO BE USED AS AID FOR GALVANIZING ONLY.

IF A SEAL IS PRESENT ON THIS SHEET IT HAS BEEN ELECTRONICALLY SEALED AND DATED.

MISSOURI HIGHWAYS AND TRANSPORTATION COMMISSION
105 WEST CAPITOL
JEFFERSON CITY, MO 65102
1-888-ASK-MODOT (1-888-275-6636)

STATE OF MISSOURI
KATHRYN PHILLIPS HARVEY
NUMBER PE-23751
PROFESSIONAL ENGINEER
THIS SHEET HAS BEEN SIGNED, SEALED AND DATED ELECTRONICALLY.

SIGN MOUNTING DETAILS
BREAKAWAY ASSEMBLIES FOR GROUND MOUNTED SIGNS

DATE EFFECTIVE: 02/01/2012
DATE PREPARED: 12/19/2011

903.03BH

SHEET NO. 1 OF 11

WIDE FLANGE STRUCTURAL STEEL POSTS DESIGN DATA

POST DES. NO.	NOM. SIZE (IN.)	WEIGHT LB/FT	WEIGHT LB/IN	DEPTH (IN.)	FLANGE WIDTH (IN.)	FLANGE THICK (IN.)	WEB THICK (IN.)
1	W6	9	0.75	5 7/8	4	3/16	3/16
2	W6	15	1.25	6	6	1/4	1/4
3	W8	18	1.50	8 1/8	5 1/4	5/16	1/4
4	W10	22	1.83	10 1/8	5 3/4	3/8	1/4
5	W10	26	2.17	10 3/8	5 3/4	7/16	1/4
6	W12	35	2.92	12 1/2	6 1/2	1/2	5/16

THE WEIGHT OF STRUCTURAL STEEL POSTS SHOWN IN THE CONTRACT HAS BEEN COMPUTED USING THE WEIGHTS SHOWN.

PERFORATED FUSE PLATE DATA TABLE

POST DESIGN NO.	F (IN.)	G (IN.)	H (IN.)	J (IN.)	K (IN.)	L (IN.)	M (IN.)	N (IN.)	d1 (IN.)	d2 (IN.)	P (IN.)	BOLT DIA. (IN.)	WT. (EA.) (LBS.)
1	4 1/4	1	1 1/8	4	2 1/4	7/8	1	1/2	9/16	3/4	3/16	1/2	0.76
2	5	1 1/4	1 1/4	6	3 1/2	1 1/4	1 1/2	3/4	11/16	1 1/4	1/4	5/8	1.67
3	5	1 1/4	1 1/4	5 1/4	2 3/4	1 1/4	1 1/4	3/4	11/16	1 1/16	1/4	5/8	1.51
4	6	1 1/2	1 1/2	5 3/4	2 3/4	1 1/2	1 3/8	13/16	13/16	1 1/8	5/16	3/4	2.52
5	6	1 1/2	1 1/2	5 3/4	2 3/4	1 1/2	1 3/8	15/16	15/16	1 1/8	5/16	3/4	2.52
6	6	1 1/2	1 1/2	6 1/2	3 1/2	1 1/2	1 5/8	15/16	15/16	1 5/16	3/8	3/4	3.35

SPLICE PLATE DATA TABLE

POST DESIGN NO.	J (IN.)	K (IN.)	L (IN.)	U (IN.)	d1 (IN.)	BOLT DIA. (IN.)	WT. (EA.) (LBS.)
1	4	2 1/4	7/8	3/16	9/16	1/2	2.45
2	6	3 1/2	1 1/4	1/4	11/16	5/8	4.89
3	5 1/4	2 3/4	1 1/4	5/16	11/16	5/8	5.32
4	5 3/4	2 3/4	1 1/2	5/16	13/16	3/4	5.75
5	5 3/4	2 3/4	1 1/2	7/16	15/16	3/4	8.04
6	6 1/2	3 1/2	1 1/2	1/2	15/16	3/4	10.47

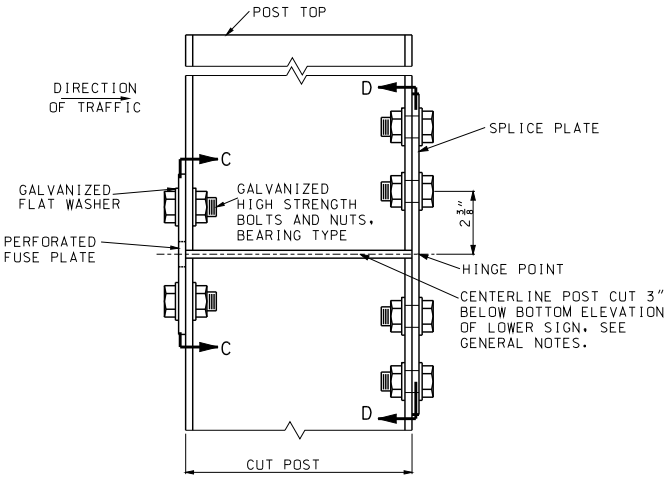

ELEVATION

PERFORATED FUSE PLATE AND SPLICE PLATE DETAIL

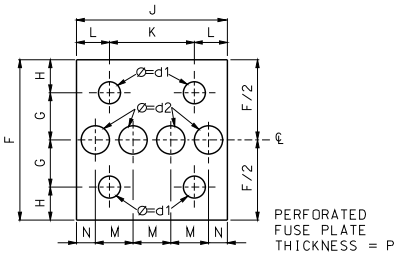

ELEVATION C-C

ALL HOLES SHALL BE DRILLED. ALL PLATE CUTS SHALL PREFERABLY BE SAW CUTS. HOWEVER: FLAME CUTTING WILL BE PERMITTED PROVIDED ALL EDGES ARE GROUND.

PERFORATED FUSE PLATE AND SPICE PLATE SHALL BE FABRICATED FROM ASTM A 36 STRUCTURAL STEEL.

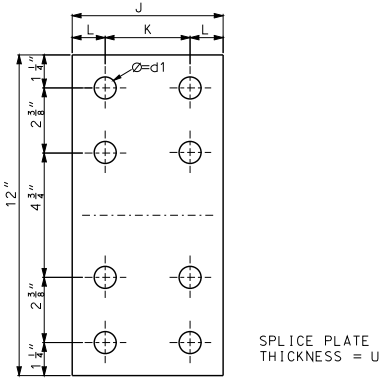

ELEVATION D-D

GENERAL NOTE:

FOR ROADWAYS WHERE TRAFFIC MAY STRIKE THE BACKSIDE OF THE POST, PERFORATED FUSE PLATES SHALL BE INSTALLED ON BOTH SIDES OF THE POST.

MISSOURI HIGHWAYS AND TRANSPORTATION COMMISSION
105 WEST CAPITOL
JEFFERSON CITY, MO 65102
1-888-ASK-MODOT (1-888-275-6636)

STATE OF MISSOURI
KATHRYN PHILLIPS HARVEY
NUMBER PE-23751
PROFESSIONAL ENGINEER
THIS SHEET HAS BEEN SIGNED, SEALED AND DATED ELECTRONICALLY.

SIGN MOUNTING DETAILS
BREAKAWAY ASSEMBLIES FOR GROUND MOUNTED SIGNS

DATE EFFECTIVE: 02/01/2012
DATE PREPARED: 12/19/2011

903.03BH

SHEET NO. 2 OF 11

IF A SEAL IS PRESENT ON THIS SHEET IT HAS BEEN ELECTRONICALLY SEALED AND DATED.

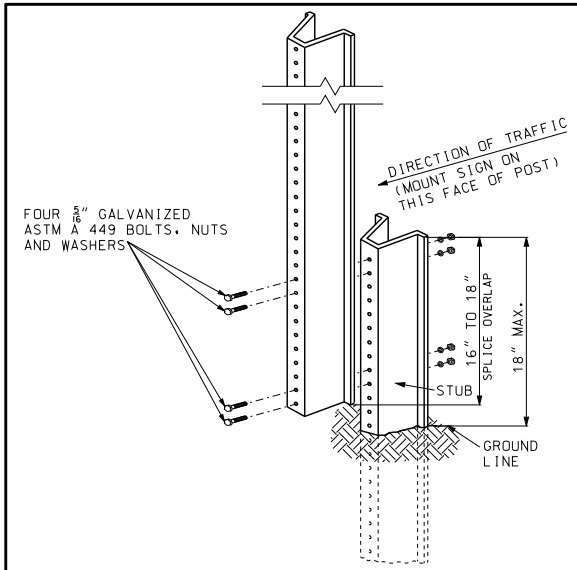

U-CHANNEL POST DETAIL
PERMANENT AND TEMPORARY INSTALLATION

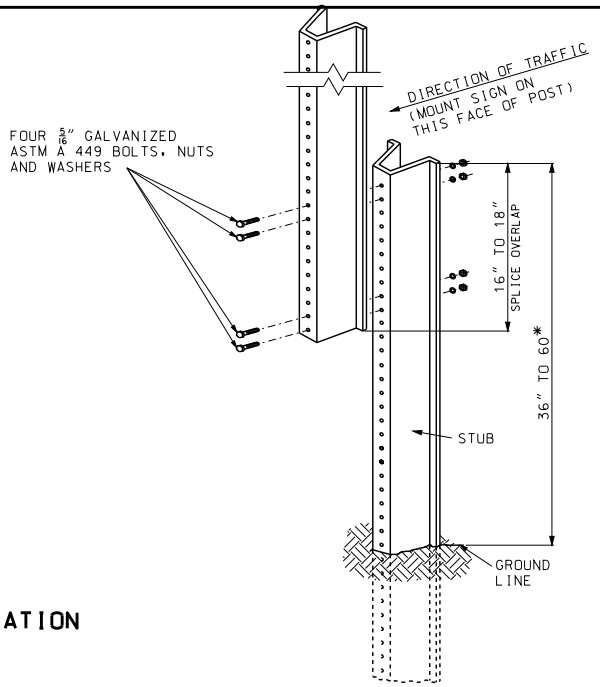

OPTIONAL U-CHANNEL POST DETAIL
TEMPORARY INSTALLATION ONLY

SIGN AREA (SQ.FT.)	POST TYPE		
	U-CHANNEL	WOOD	PERFORATED SQUARE STEEL TUBING
≤ 10	1 - 3.0 LB./FT.*	1 - 4" X 4"*	1 - 2" 12 GA.*
> 10 ≤ 16	2 - 3.0 LB./FT.	2 - 4" X 4" 1 - 4" X 6"*	2 - 2" 12 GA.
> 16 ≤ 24	2 - 3.0 LB./FT.	2 - 4" X 6"	3 - 2" 12 GA.**
> 24 ≤ 30	3 - 3.0 LB./FT.	2 - 4" X 6"	N/A
> 30 ≤ 50	N/A	2 - 6" X 6"	N/A

* SIGNS GREATER THAN 4 FEET IN WIDTH, EXCEPT DIAMOND SHAPE SIGNS, REQUIRE TWO POSTS.

** REQUIRES SLIP BASE PER MANUFACTURER'S RECOMMENDATION.

POST SIZE REQUIREMENTS

USE OF SPLICE IS OPTIONAL.

PERMANENT AND TEMPORARY INSTALLATIONS: SPLICE OVERLAP SHALL BE POSITION ENTIRELY BETWEEN GROUND LINE AND 18" ABOVE GROUND LINE.

OPTIONAL TEMPORARY INSTALLATIONS: SPLICE OVERLAY MAY BE POSITIONED BETWEEN 18" AND 60" ABOVE GROUND LINE.
* IF A PLAQUE IS USED, NEITHER THE SIGN NOR PLAQUE SHALL BE POSITIONED WITH THE SPLICE OVERLAP.

ONLY ONE SPLICE WILL BE ALLOWED PER POST.

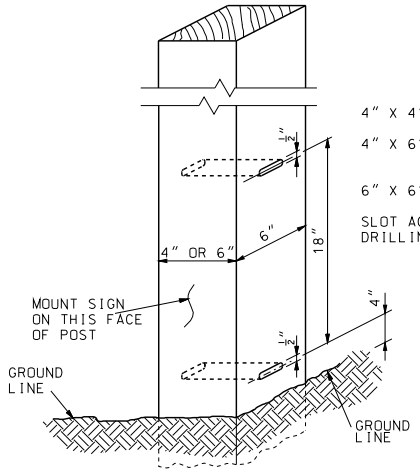

WOOD POST DETAIL

4" X 4" WOOD POST - NO SLOTS OR HOLES REQUIRED

4" X 6" WOOD POST - 1 1/2" X 1/2" SLOT ON 6" SIDE OR 1 1/2" DIA. HOLE ON 6" SIDE

6" X 6" WOOD POST - 2" X 1/2" SLOT OR 2" DIA. HOLE

SLOT ACROSS NEUTRAL AXIS FORMED BY SUCCESSIVE DRILLING WITH 1/2" BIT.

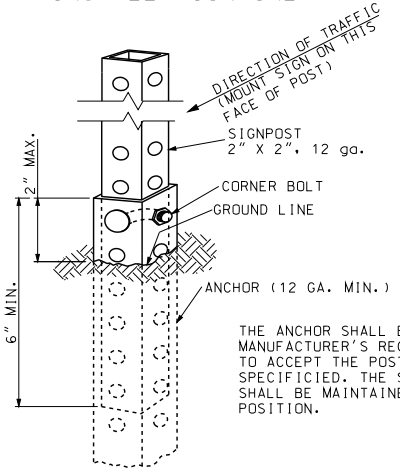

PERFORATED SQUARE STEEL TUBE POST DETAIL

THE SIGNPOST SHALL BE ATTACHED TO THE ANCHOR WITH THE CORNER BOLT PER MANUFACTURER'S SPECIFICATION.

THE SPLICE SHALL CONSIST OF A 12 INCH PIECE OF 1 3/4 INCH TUBE, INSERTED 6" INTO BOTH THE UPPER AND LOWER SIGNPOST SECTIONS AND CORNER-BOLTED AT BOTH ENDS.

THE ANCHOR SHALL BE SIZED AS PER MANUFACTURER'S RECOMMENDATIONS TO ACCEPT THE POST SIZE SPECIFICIED. THE SIGN ASSEMBLY SHALL BE MAINTAINED IN A PLUMB POSITION.

GENERAL NOTES:

ALL POSTS SHALL BE EMBEDDED A MINIMUM OF 3 FEET.

MISSOURI HIGHWAYS AND TRANSPORTATION COMMISSION
105 WEST CAPITOL
JEFFERSON CITY, MO 65102
1-888-ASK-MODOT (1-888-275-6636)

STATE OF MISSOURI
KATHRYN PHILLIPS HARVEY
NUMBER PE-2007051
PROFESSIONAL ENGINEER
THIS SHEET HAS BEEN SIGNED, SEALED AND DATED ELECTRONICALLY.

SIGN MOUNTING DETAILS
POST MOUNTING DETAILS

DATE EFFECTIVE: 02/01/2012
DATE PREPARED: 11/26/2012

903.03BH

SHEET NO. 3 OF 11

IF A SEAL IS PRESENT ON THIS SHEET IT HAS BEEN ELECTRONICALLY SEALED AND DATED.

ROUND PIPE POST FOR GROUND MOUNTED SIGNS

NOMINAL PIPE SIZE (IN.)	BOLT DATA			BASE CONNECTION DATA TABLE (IN.)					
	SIZE (IN.)	LENGTH (IN.)	TORQUE IN.-LB	A	B	C	R	T	W
2½ & 3	½	3½	140	6¼	9	¼	9/32	1	¼
4	5/8	3¾	345	7 3/16	10	¼	⅜	1	5/16

ROUND PIPE POST AND FOOTING DATA TABLE

NOM. SIZE (IN.)	WEIGHT		STUB LENGTH	FOOTING		CONCRETE
	LBS/FT	LBS/IN		DIA.	DEPTH	C.Y.
2½	5.79	0.48	4'- 3½"	12"	4'-6"	0.13
3	7.58	0.63	4'- 3½"	12"	4'-6"	0.13
4	10.79	0.90	5'- 3½"	18"	5'-6"	0.36

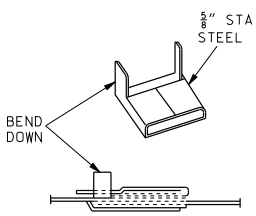

VIEW SHOWING ENDS OF STRAP. CLAMPED IN SEAL

STRAP SEAL

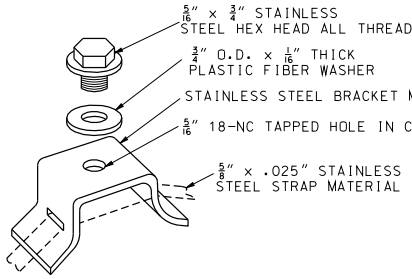

FLARED LEG SIGN BRACKET

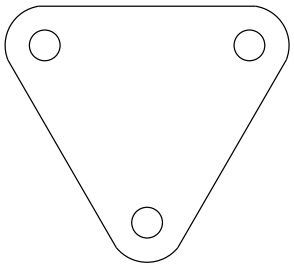

BOLT RETAINER

SHEET METAL BOLT RETAINER CUT FROM 30 GUAGE GALVANIZED SHEET METAL. PLACE BETWEEN BASE PLATES. SIZE VARIES TO FIT PLATE. BOLT HOLES SHALL BE 1/16" LARGER THAN REQUIRED BOLT SIZE.

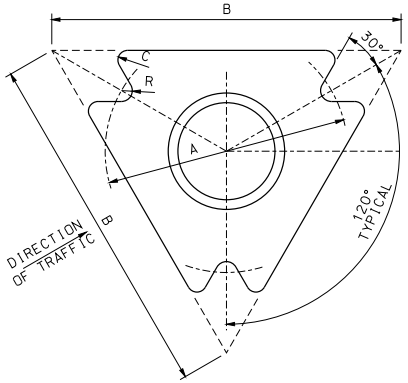

PLAN VIEW

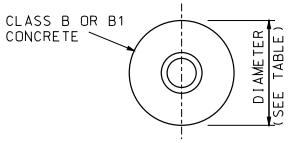

SECTION C-C

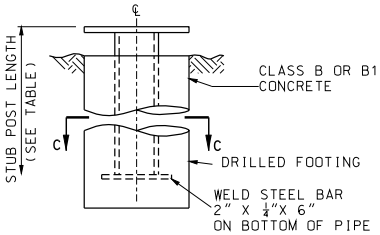

FOUNDATION DETAIL
SLIP BASE ASSEMBLIES

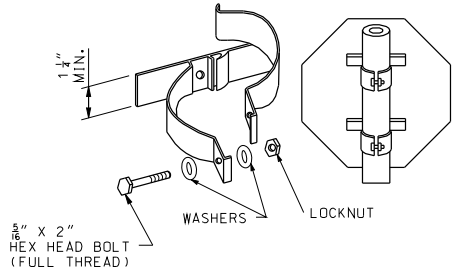

STAINLESS STEEL HARDWARE
CLAMP TYPE SIGN SUPPORTS FOR PIPE POST

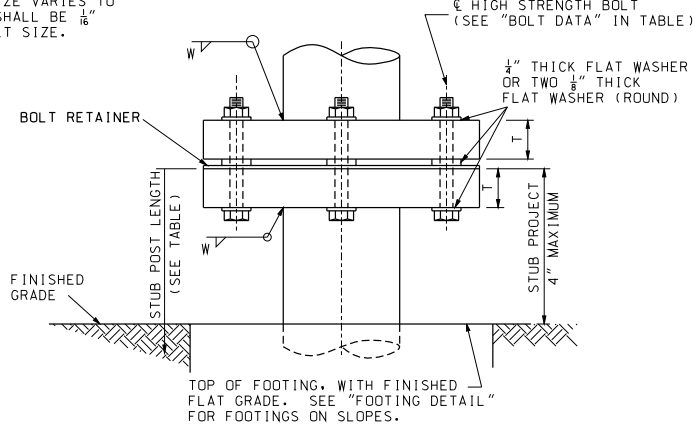

ELEVATION
(STEEL PIPE POST BASE CONNECTION)

MULTI-DIRECTION SLIP BASE

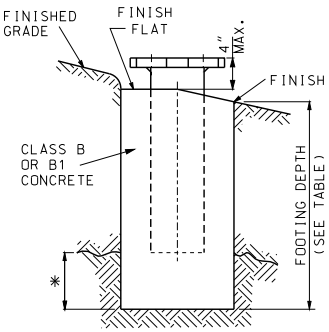

FOOTING DETAIL

* PIPE 3" DIA. AND UNDER: 2' MAXIMUM IN ROCK. PIPE OVER 3" DIA.: 3' MAXIMUM IN ROCK

ROLLED CRIMP TO ENGAGE PIPE O.D.

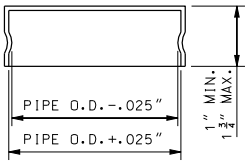

FRICTION CAP

GENERAL NOTE:

REFER TO THE GENERAL NOTES ON SHEET 1.

IF A SEAL IS PRESENT ON THIS SHEET IT HAS BEEN ELECTRONICALLY SEALED AND DATED.

MISSOURI HIGHWAYS AND TRANSPORTATION COMMISSION
105 WEST CAPITOL
JEFFERSON CITY, MO 65102
1-888-ASK-MODOT (1-888-275-6636)

STATE OF MISSOURI
KATHRYN PHILLIPS HARVEY
NUMBER PE-23751
PROFESSIONAL ENGINEER
THIS SHEET HAS BEEN SIGNED, SEALED AND DATED ELECTRONICALLY.

SIGN MOUNTING DETAILS
POST FOR SIGNS
30 SQUARE FEET
OR SMALLER

DATE EFFECTIVE: 02/01/2012
DATE PREPARED: 12/19/2011

903.03BH

SHEET NO. 4 OF 11

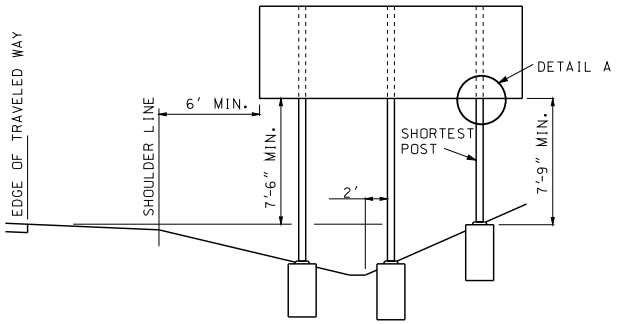

DITCH SECTION

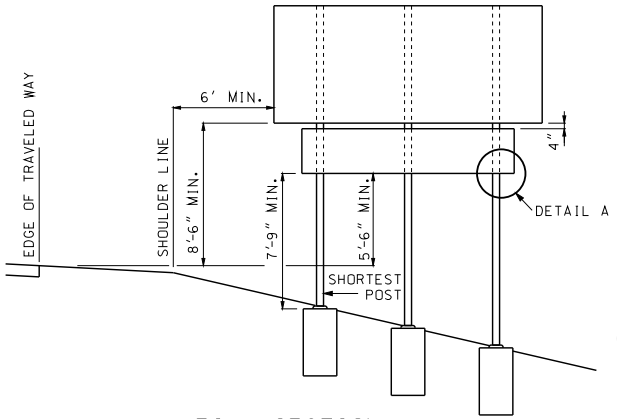

FILL SECTION

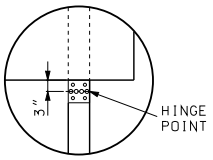

DETAIL A

NOTE: SEE SHEET 2 FOR FUSE PLATE DETAILS.

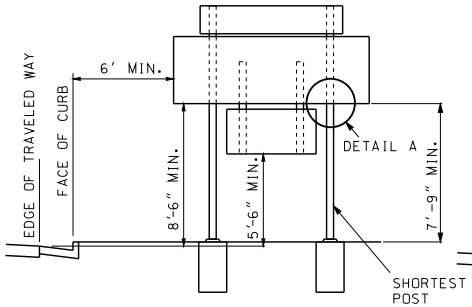

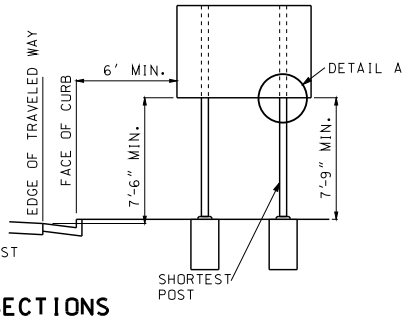

BARRIER CURB SECTIONS

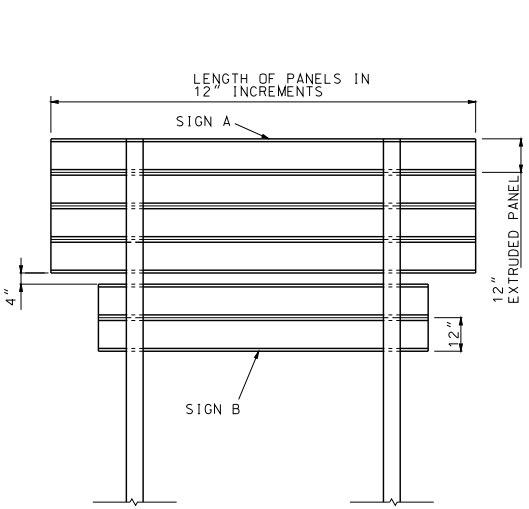

SIGN B MAY BE MOUNTED ABOVE OR BELOW SIGN A AS REQUIRED.

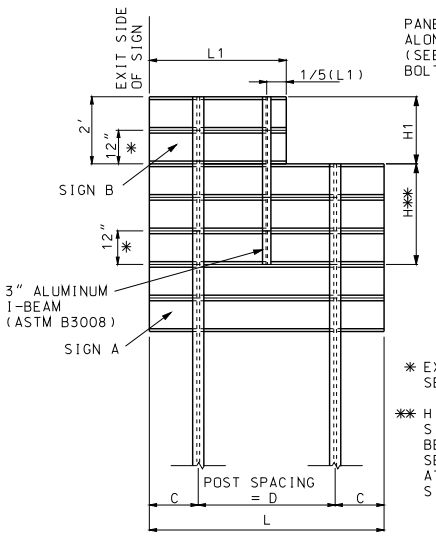

PANEL BOLTS SPACED 24″ O.C. ALONG SIGN/PANEL INTERFACE. (SEE OTHER DRAWING FOR BOLT & WASHER DETAILS.)

* EXTRUDED ALUMINUM PANEL. SEE OTHER DRAWINGS.

** H = H1 + 12″. H APPLIES TO SIGNS SUSPENDED ABOVE OR BELOW THE PRIMARY SIGN IF SECONDARY SIGN IS NOT ATTACHED TO THE MAIN SIGN POSTS.

USE THIS DETAIL FOR EXIT NUMBER PANELS MOUNTED ON GUIDE SIGNS.

SIGN AND PANEL SPACING

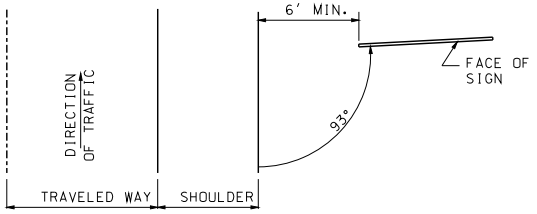

LOCATION SKETCH

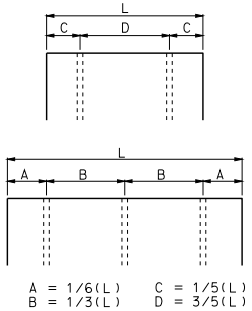

A = 1/6(L) C = 1/5(L)
B = 1/3(L) D = 3/5(L)

POST SPACING

FOR L OF 6′ TO 17′ USE 2 POSTS.
FOR L GREATER THAN 17′ USE 3 POSTS.
FOR L LESS THAN 17′, 3 POSTS MAY BE USED DEPENDING ON SOIL CONDITIONS.
FOR POST DESIGNS 2, 4, 5 AND 6, LENGTH D OR B MUST BE 7 FEET.

GENERAL NOTE:

REFER TO THE GENERAL NOTES ON SHEET 1.

IF A SEAL IS PRESENT ON THIS SHEET IT HAS BEEN ELECTRONICALLY SEALED AND DATED.

MISSOURI HIGHWAYS AND TRANSPORTATION COMMISSION
105 WEST CAPITOL
JEFFERSON CITY, MO 65102
1-888-ASK-MODOT (1-888-275-6636)

STATE OF MISSOURI
KATHRYN PHILLIPS HARVEY
NUMBER PE-23751
PROFESSIONAL ENGINEER
THIS SHEET HAS BEEN SIGNED, SEALED AND DATED ELECTRONICALLY.

SIGN MOUNTING DETAILS
TYPICAL SECTION AND POST SPACING

DATE EFFECTIVE: 02/01/2012
DATE PREPARED: 12/19/2011

903.03BH

SHEET NO. 5 OF 11

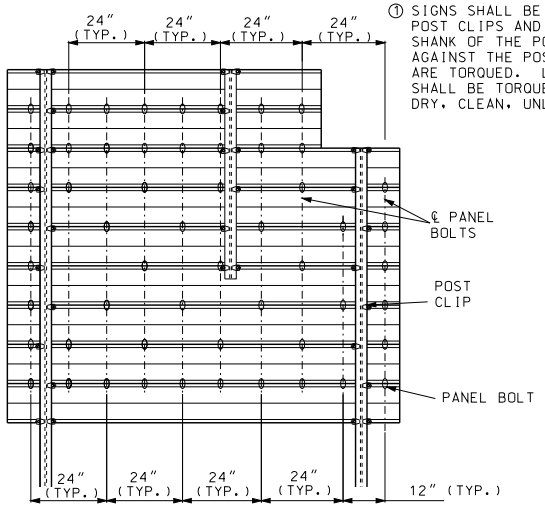

① SIGNS SHALL BE FIELD ATTACHED TO POSTS WITH POST CLIPS AND BOLTS. SEE POST CLIP DETAIL. THE SHANK OF THE POST CLIP BOLT SHALL FIT TIGHTLY AGAINST THE POST FLANGE AFTER THE LOCKNUTS ARE TORQUED. LOCKNUTS ON THE POST CLIP BOLTS SHALL BE TORQUED TO 225 INCH-POUNDS WHEN USING DRY, CLEAN, UNLUBRICATED THREADS.

PANEL BOLT LOCATION

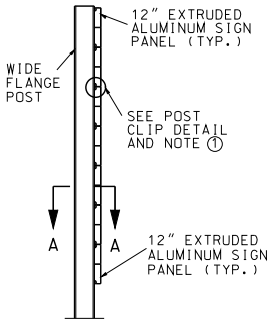

END ELEVATION

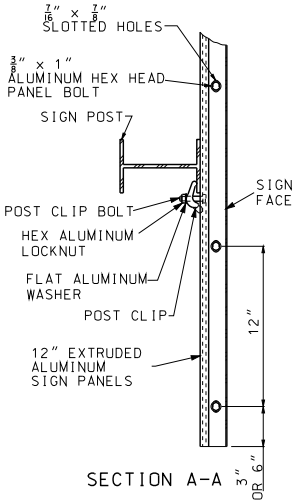

SECTION A-A

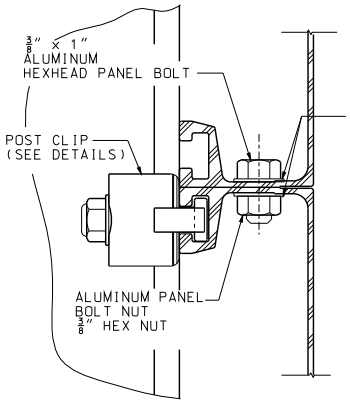

POST CLIP DETAIL

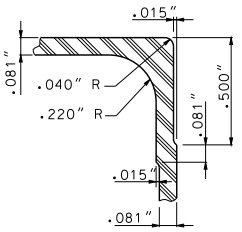

DETAIL C

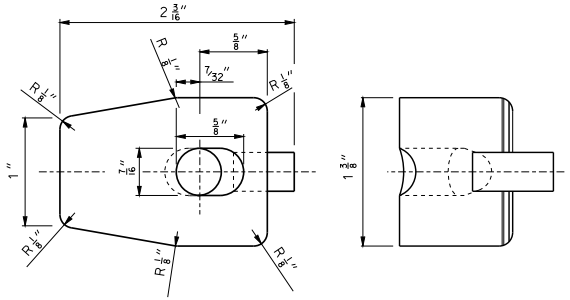

PLAN VIEW

END VIEW

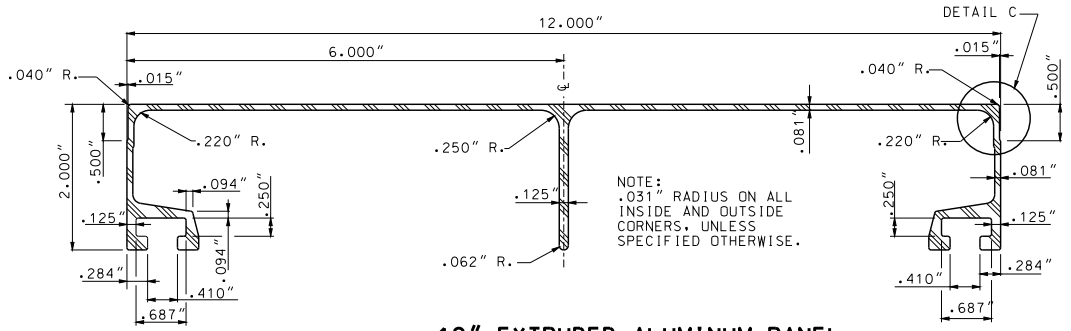

NOTE:
.031" RADIUS ON ALL INSIDE AND OUTSIDE CORNERS, UNLESS SPECIFIED OTHERWISE.

12" EXTRUDED ALUMINUM PANEL

MINIMUM WT. = 2.40 LBS./FT.

NOTE:
MINIMUM WEIGHT AND THICKNESS DIMENSIONS SHOWN. HEAVIER PANELS MAY BE USED.

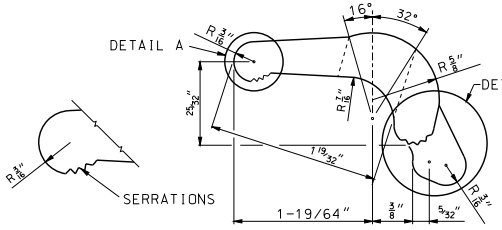

DETAIL A
ENLARGED VIEW OF SERRATIONS

ELEVATION VIEW

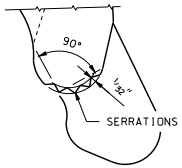

DETAIL B
ENLARGED DETAIL OF SERRATIONS

POST CLIP

SAW GATING AS SHOWN (APPROXIMATELY FLAT PERMISSABLE)

POST CLIPS SHALL BE ASTM B 108, 356-T6 ALUMINUM ALLOY.

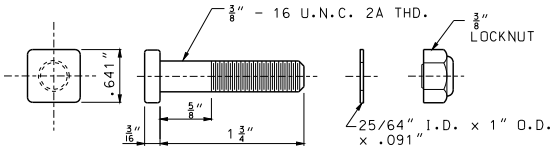

POST CLIP BOLT
WITH FLAT WASHER AND LOCKNUT

NOTE:
SQUARE BOLT HEAD SHOWN. RECTANGULAR BOLT HEAD WITH LEAST DIMENSION OF .641" MAY BE USED.

BOLT - 1 3/4 x 3/8 ALUMINUM
HEX LOCKNUT - 3/8" ALUMINUM
WASHER - ALUMINUM

MISSOURI HIGHWAYS AND TRANSPORTATION COMMISSION
105 WEST CAPITOL
JEFFERSON CITY, MO 65102
1-888-ASK-MODOT (1-888-275-6636)

STATE OF MISSOURI
KATHRYN PHILLIPS HARVEY
NUMBER PE-23751
PROFESSIONAL ENGINEER
THIS SHEET HAS BEEN SIGNED, SEALED AND DATED ELECTRONICALLY.

SIGN MOUNTING DETAILS
EXTRUDED ALUMINUM PANEL DETAILS

DATE EFFECTIVE: 02/01/2012
DATE PREPARED: 12/19/2011

903.03BH

SHEET NO. 6 OF 11

IF A SEAL IS PRESENT ON THIS SHEET IT HAS BEEN ELECTRONICALLY SEALED AND DATED.

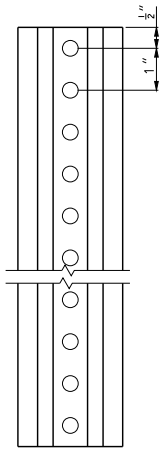

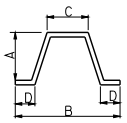

STEEL OBJECT MARKER POST					
LIMITS	LBS/FT (5)	DIMENSIONS - INCHES			
		A	B	C	D
MIN.	1.80	1 1/4	2 1/2	31/32	15/32
MAX.	2.25	1 3/8	3 1/4	1 1/4	23/32

(5) WEIGHT BEFORE GALVANIZING OR PUNCHING. LIMITS SHOWN ARE ABSOLUTE. NO FURTHER WEIGHT, DIMENSIONAL OR COMMERCIAL TOLERANCE WILL BE ACCEPTABLE.

HOLE PUNCHING TO EQUAL 3/8" DIAMETER HOLES, ONE INCH CENTER TO CENTER, BEGINNING ONE-HALF INCH FROM THE END AND CONTINUING THE ENTIRE LENGTH OF THE POST.

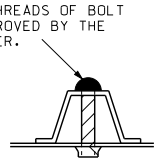

FOUL THREADS OF BOLT AS APPROVED BY THE ENGINEER.

OBJECT MARKER POST AND FASTENER DETAILS

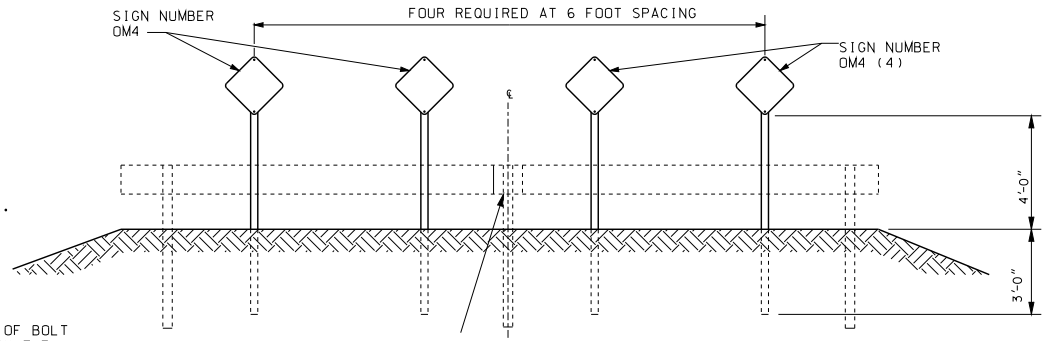

MOUNTING DETAILS
(END OF ROAD OR STREET)

TYPE 4 OBJECT MARKER SIGN OM4

(4) RED REFLECTIVE SHEETING IN ACCORDANCE WITH SEC 104.2.7.3 ON 0.080 SHEET ALUMINUM.

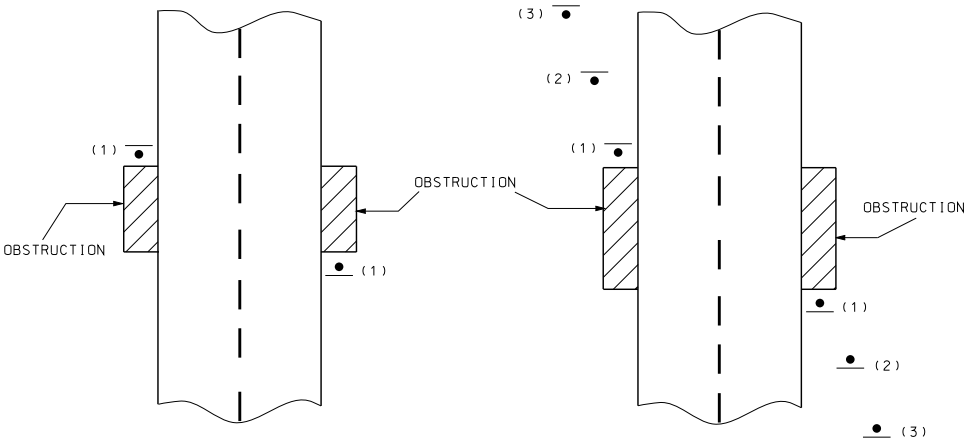

OBSTRUCTION < 20' LONGITUDINALLY

OBSTRUCTION > 20' LONGITUDINALLY

(1) PLACE AS NEAR THE OBSTRUCTION AS POSSIBLE, AND ALIGN INSIDE EDGE WITH THE INSIDE EDGE OF OBSTRUCTION.
(2) PLACE 1.5 FT. OUTSIDE OF FIRST MARKER AND 20 FT. UPSTREAM.
(3) PLACE 3.0 FT. OUTSIDE OF FIRST MARKER AND 40 FT. UPSTREAM.

TYPE 3 OBJECT MARKER SIGN OM3

NOTE:
WHERE FIELD CONDITIONS DO NOT ALLOW FOR THE 1.5 FT. AND 3.0 FT. LATERAL OFFSETS OF SIGNS (2) AND (3) RESPECTIVELY, THE SIGNS SHOULD BE OFFSET AS MUCH AS PRACTICABLE.

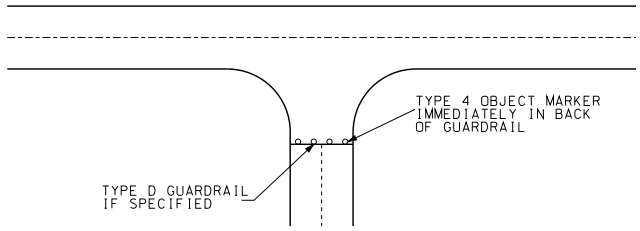

TYPICAL ROAD CLOSURE

GENERAL NOTES:

THE CONTRACT UNIT PRICE FOR EACH TYPE 3 OR 4 OBJECT MARKER SHALL INCLUDE SIGN PANEL, REFLECTIVE SHEETING, AND POST, REGARDLESS OF LENGTH.

STRIPES ON TYPE 3 OBJECT MARKERS SHALL BE SLOPED DOWNWARD IN THE INTENDED DIRECTION OF TRAFFIC.

MISSOURI HIGHWAYS AND TRANSPORTATION COMMISSION
105 WEST CAPITOL
JEFFERSON CITY, MO 65102
1-888-ASK-MODOT (1-888-275-6636)

STATE OF MISSOURI
KATHRYN PHILLIPS HARVEY
NUMBER PE-2575I
PROFESSIONAL ENGINEER
THIS SHEET HAS BEEN SIGNED, SEALED AND DATED ELECTRONICALLY.

SIGN MOUNTING DETAILS
DELINEATORS OBJECT MARKERS

DATE EFFECTIVE: 02/01/2012
DATE PREPARED: 12/19/2011

903.03BH

SHEET NO. 7 OF 11

IF A SEAL IS PRESENT ON THIS SHEET IT HAS BEEN ELECTRONICALLY SEALED AND DATED.

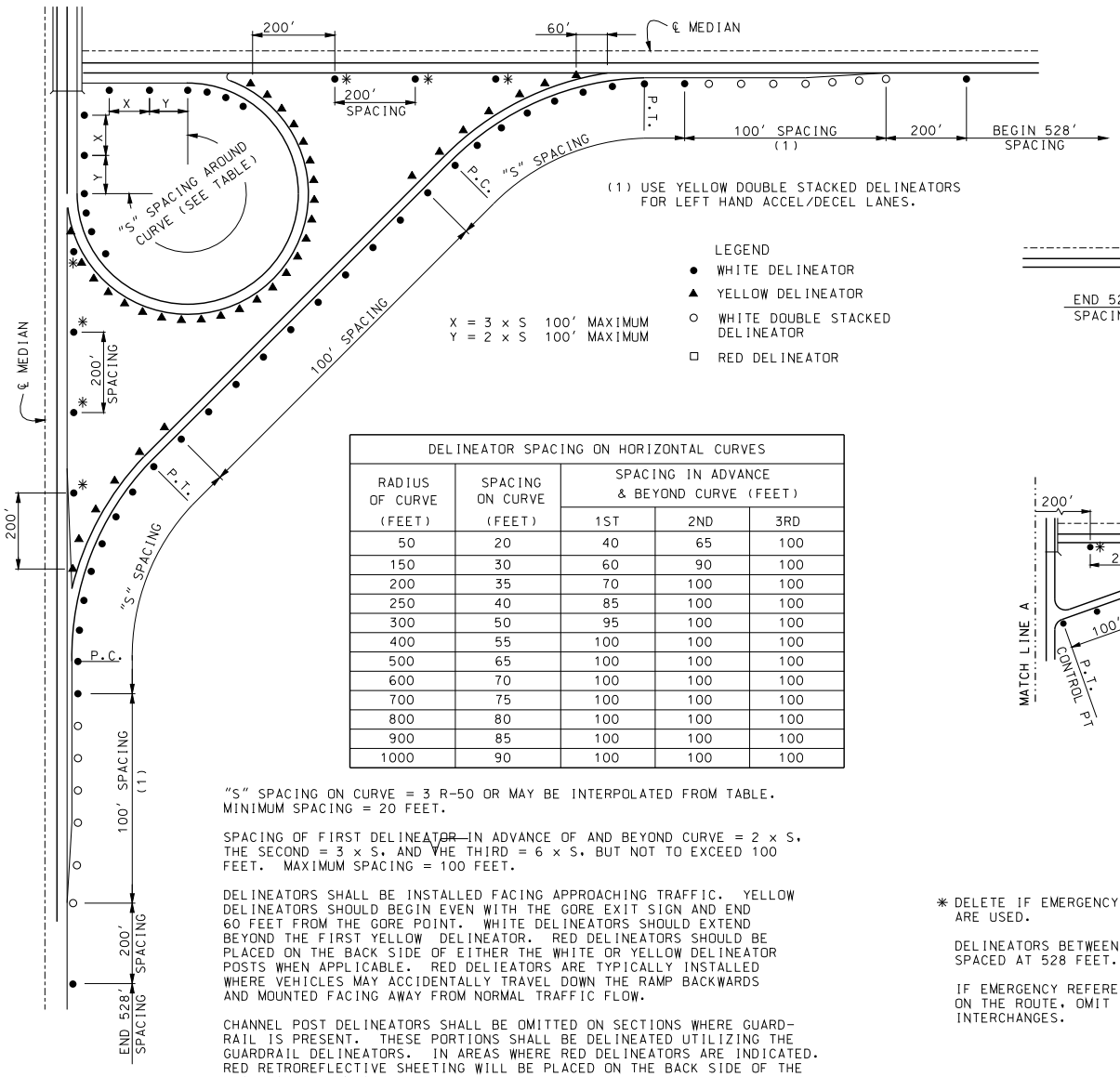

(1) USE YELLOW DOUBLE STACKED DELINEATORS FOR LEFT HAND ACCEL/DECEL LANES.

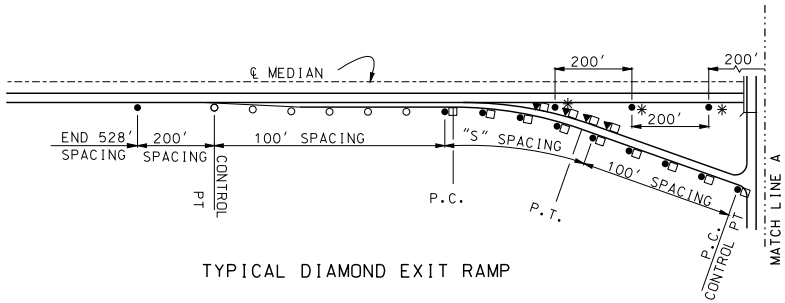

TYPICAL DIAMOND EXIT RAMP

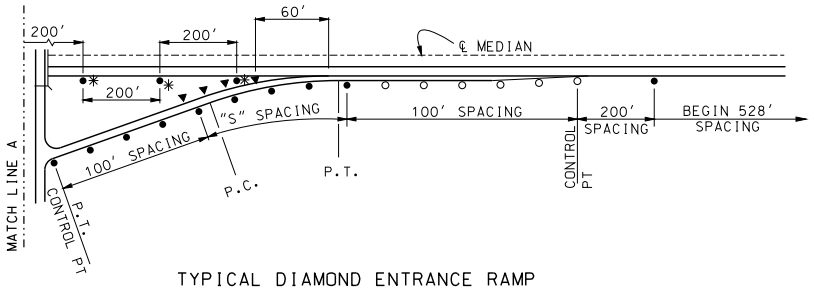

TYPICAL DIAMOND ENTRANCE RAMP

TYPICAL INTERCHANGE

DELINEATOR SPACING ON HORIZONTAL CURVES				
RADIUS OF CURVE (FEET)	SPACING ON CURVE (FEET)	SPACING IN ADVANCE & BEYOND CURVE (FEET)		
		1ST	2ND	3RD
50	20	40	65	100
150	30	60	90	100
200	35	70	100	100
250	40	85	100	100
300	50	95	100	100
400	55	100	100	100
500	65	100	100	100
600	70	100	100	100
700	75	100	100	100
800	80	100	100	100
900	85	100	100	100
1000	90	100	100	100

"S" SPACING ON CURVE = 3 R-50 OR MAY BE INTERPOLATED FROM TABLE. MINIMUM SPACING = 20 FEET.

SPACING OF FIRST DELINEATOR IN ADVANCE OF AND BEYOND CURVE = 2 x S, THE SECOND = 3 x S, AND THE THIRD = 6 x S, BUT NOT TO EXCEED 100 FEET. MAXIMUM SPACING = 100 FEET.

DELINEATORS SHALL BE INSTALLED FACING APPROACHING TRAFFIC. YELLOW DELINEATORS SHOULD BEGIN EVEN WITH THE GORE EXIT SIGN AND END 60 FEET FROM THE GORE POINT. WHITE DELINEATORS SHOULD EXTEND BEYOND THE FIRST YELLOW DELINEATOR. RED DELINEATORS SHOULD BE PLACED ON THE BACK SIDE OF EITHER THE WHITE OR YELLOW DELINEATOR POSTS WHEN APPLICABLE. RED DELIEATORS ARE TYPICALLY INSTALLED WHERE VEHICLES MAY ACCIDENTALLY TRAVEL DOWN THE RAMP BACKWARDS AND MOUNTED FACING AWAY FROM NORMAL TRAFFIC FLOW.

CHANNEL POST DELINEATORS SHALL BE OMITTED ON SECTIONS WHERE GUARD-RAIL IS PRESENT. THESE PORTIONS SHALL BE DELINEATED UTILIZING THE GUARDRAIL DELINEATORS. IN AREAS WHERE RED DELINEATORS ARE INDICATED. RED RETROREFLECTIVE SHEETING WILL BE PLACED ON THE BACK SIDE OF THE GUARDRAIL DELINEATOR.

REFLECTIVE SHEETING SHALL BE IN ACCORDANCE WITH SEC 1042.2.7.3.

* DELETE IF EMERGENCY REFERENCE MARKERS ARE USED.

DELINEATORS BETWEEN INTERCHANGES SPACED AT 528 FEET.

IF EMERGENCY REFERENCE MARKERS ARE USED ON THE ROUTE, OMIT DELINEATORS BETWEEN INTERCHANGES.

GENERAL NOTES:

THE CONTRACT UNIT PRICE FOR EACH CHANNEL POST DELINEATOR SHALL INCLUDE THE REFLECTOR, FASTENERS AND POST.

MISSOURI HIGHWAYS AND TRANSPORTATION COMMISSION
105 WEST CAPITOL
JEFFERSON CITY, MO 65102
1-888-ASK-MODOT (1-888-275-6636)

STATE OF MISSOURI
KATHRYN PHILLIPS HARVEY
NUMBER PE-23751
PROFESSIONAL ENGINEER
THIS SHEET HAS BEEN SIGNED, SEALED AND DATED ELECTRONICALLY.

SIGN MOUNTING DETAILS

CHANNEL POST DELINEATORS

DATE EFFECTIVE: 02/01/2012
DATE PREPARED: 12/19/2011

903.03BH

SHEET NO. 8 OF 11

IF A SEAL IS PRESENT ON THIS SHEET IT HAS BEEN ELECTRONICALLY SEALED AND DATED.

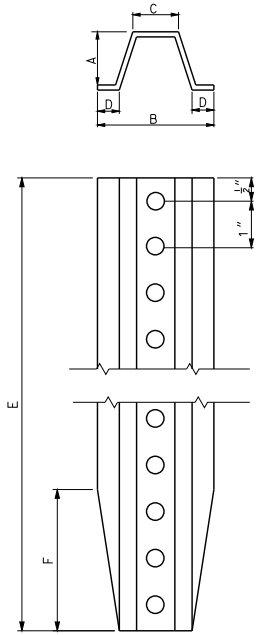

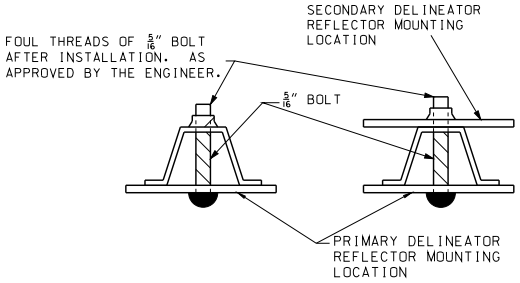

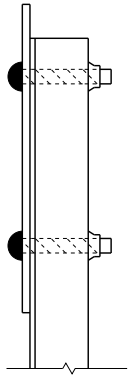

HOLE PUNCHING TO EQUAL 5/8" DIAMETER HOLES, ONE INCH CENTER TO CENTER, BEGINNING ONE-HALF INCH FROM THE END AND CONTINUING THE ENTIRE LENGTH OF THE POST.

DELINEATOR POST							
LIMITS	LBS/FT (2)	DIMENSIONS - INCHES					
		A	B	C	D	E	F
NOMINAL	1.12	1	2 1/4	7/8	3/8	84	1
TOLERANCE	± 5%	± 1/8	± 1/8	± 1/8	± 1/8	±1	± 1/4

(2) WEIGHT BEFORE GALVANIZING OR PUNCHING.

DELINEATOR POST AND FASTENER DETAILS

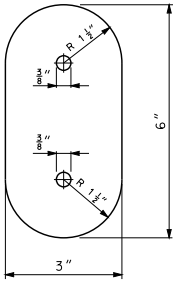

CHANNEL POST DELINEATOR REFLECTOR

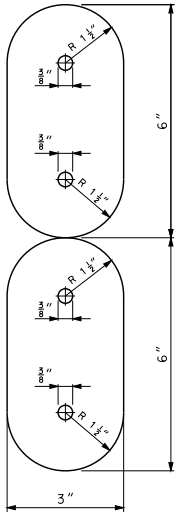

DOUBLE STACKED CHANNEL POST DELINEATOR REFLECTOR

GENERAL NOTES:

RETROREFLECTIVE YELLOW, WHITE OR RED SHEETING IN ACCORDANCE WITH ASTM D 4956 TYPE 5 OR 8 SHALL BE APPLIED TO ONLY ONE SIDE OF THE CHANNEL POST DELINEATOR MOUNTED TOWARDS THE CHANNEL POST.

REFLECTIVE SHEETING SHALL FOLLOW GUIDELINES OUTLINED IN SEC 1042.2.7 FOR CORRECT APPLICATION OF SHEETING TO DELINEATOR BODY. THE COLOR OF THE SHEETING SHALL MATCH THE CLOSEST ADJACENT PAVEMENT MARKING. A DELINEATOR WITH RED SHEETING SHALL BE APPLIED TO THE BACK SIDE OF THE CHANNEL POST WHEN THE DELINEATION IS PLACED ALONG AN INTERCHANGE RAMP AND COULD BE VIEWED BY WRONG WAY TRAFFIC.

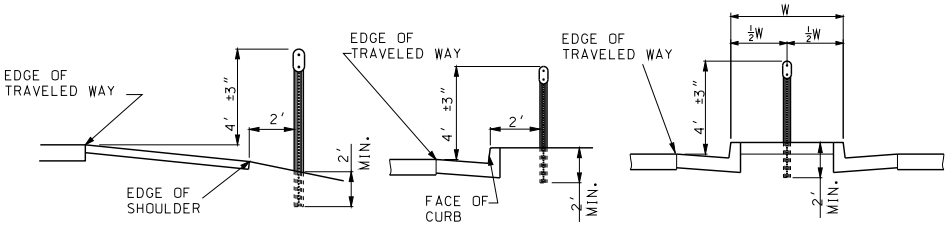

SHOULDER MOUNTED | OUTSIDE BARRIER CURB | NARROW PAVED MEDIAN

DELINEATOR MOUNTING DETAILS

MISSOURI HIGHWAYS AND TRANSPORTATION COMMISSION
105 WEST CAPITOL
JEFFERSON CITY, MO 65102
1-888-ASK-MODOT (1-888-275-6636)

STATE OF MISSOURI
KATHRYN PHILLIPS HARVEY
NUMBER PE-23751
PROFESSIONAL ENGINEER
THIS SHEET HAS BEEN SIGNED, SEALED AND DATED ELECTRONICALLY.

SIGN MOUNTING DETAILS

CHANNEL POST DELINEATORS

DATE EFFECTIVE: 02/01/2012
DATE PREPARED: 11/26/2012

903.03BH

SHEET NO. 9 OF 11

IF A SEAL IS PRESENT ON THIS SHEET IT HAS BEEN ELECTRONICALLY SEALED AND DATED.

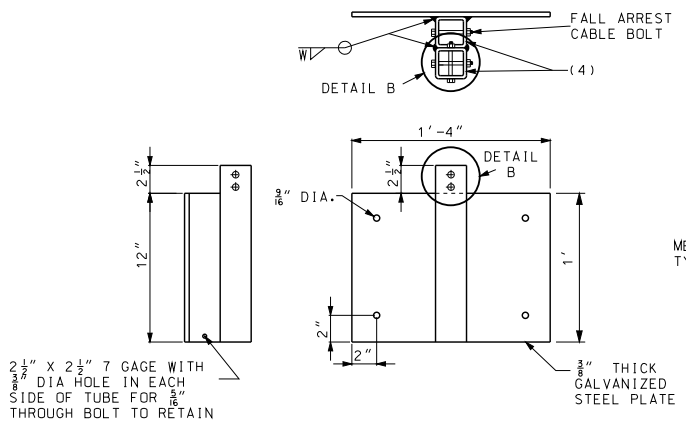

MOUNTING PLATE DETAIL

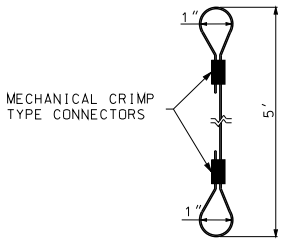

FALL ARREST CABLE DETAIL

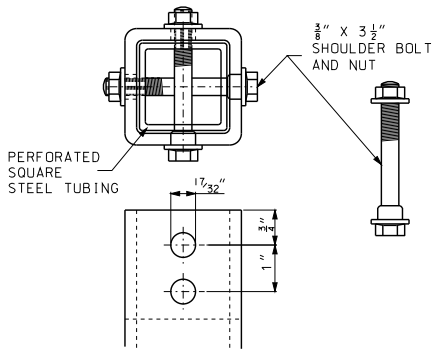

DETAIL B SHOULDER BOLT

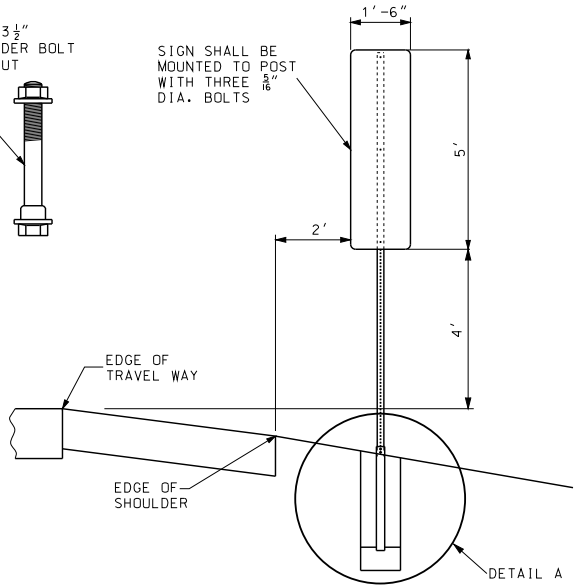

GROUND INSTALLATION

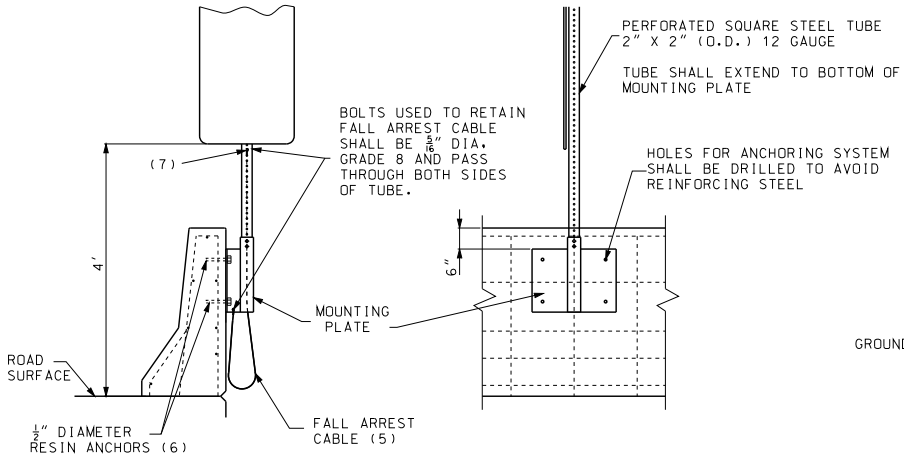

BARRIER WALL INSTALLATION

(1) PERFORATED SQUARE STEEL TUBE 2" X 2" (O.D.) 12 GAUGE. TUBE SHALL EXTEND A MINIMUM OF 24" BELOW THE TOP OF THE FOUNDATION TUBE.

(2) TUBE TO EXTEND ABOVE FOUNDATION ONLY ENOUGH TO ALLOW BOLT TO BE INSERTED 2½" MAXIMUM.

(3) CONCRETE MIX TO HOLD FOUNDATION TUBE PLUMB WITH-OUT BRACING SHALL HAVE A MINIMUM OF 5.5 SACKS OF CEMENT PER CUBIC YARD AND A MAXIMUM SLUMP OF 2½".

(4) 2½" x 2½" (O.D.) SQUARE TUBE GALVANIZED 7 GAGE WITH TWO 17/32" DIAMETER HOLES IN EACH FACE ¾" BELOW TOP OF TUBE.

(5) ⅛"x 5' LONG STAINLESS STEEL CABLE (ASTM A 492 TYPE 304 MINIMUIM BREAKING STRENGTH 200 LBS.) WITH A 1" DIA. LOOP AT EACH END LOOPS FORMED BY MECHANICAL CRIMP TYPE CONNECTION PER MANUFACTURER'S SPECIFICATIONS. CABLE IS TO BE RUN INSIDE PERFORATED SQUARE STEEL TUBE. CABLE ISTO BE USED ONLY WHEN SIGN MOUNTING LOCATION IS OVER ANOTHER TRAVELWAY.

(6) ½" DIAMETER RESIN ANCHORS SHALL BE INSTALLED IN ACCORDANCE WITH STANDARD SPECIFICATIONS (SEC 1039). AN APPROVED MAECHANICAL TYPE ANCHOR MAY BE USED IF THE DEVICE EQUALS OR EXCEEDS THE PULL TEST REQUIREMENTS OF SEC. 1039.

(7) FALL ARREST CABLE TO BE SECURED TO NEXT FULL HOLE BELOW SIGN

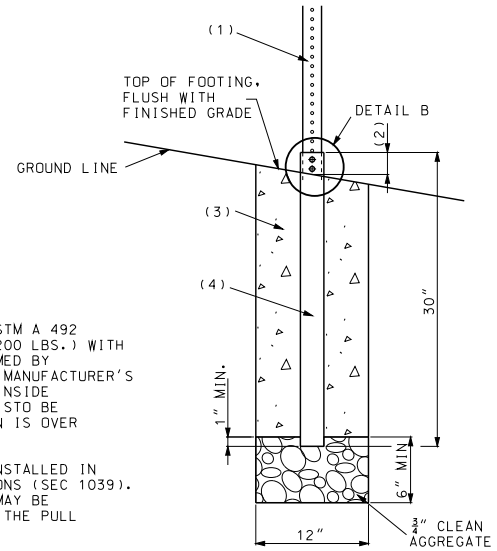

DETAIL A

GENERAL NOTES:

PERFORATED SQUARE STEEL TUBE SHALL BE SECURED TO FOUNDATION TUBE OR BARRIER WALL MOUNTING PLATE WITH A SHOULDER BOLT PER PERFORATED SQUARE STEEL TUBE MANUFACTURER'S SPECIFICATION.

THE CONTRACT UNIT PRICE FOR REFERENCE MARKER SHALL INCLUDE SIGN PANEL, FASTENER, POST AND ALL MATERIAL CONTAINED IN THE FOUNDATION OR BARRIER WALL MOUNTING HARDWARE.

MISSOURI HIGHWAYS AND TRANSPORTATION COMMISSION
105 WEST CAPITOL
JEFFERSON CITY, MO 65102
1-888-ASK-MODOT (1-888-275-6636)

STATE OF MISSOURI
KATHRYN PHILLIPS HARVEY
NUMBER PE-23751
PROFESSIONAL ENGINEER
THIS SHEET HAS BEEN SIGNED, SEALED AND DATED ELECTRONICALLY.

SIGN MOUNTING DETAILS

EMERGENCY REFERENCE MARKERS

DATE EFFECTIVE: 02/01/2012
DATE PREPARED: 12/19/2011

903.03BH

SHEET NO. 10 OF 11

IF A SEAL IS PRESENT ON THIS SHEET IT HAS BEEN ELECTRONICALLY SEALED AND DATED.

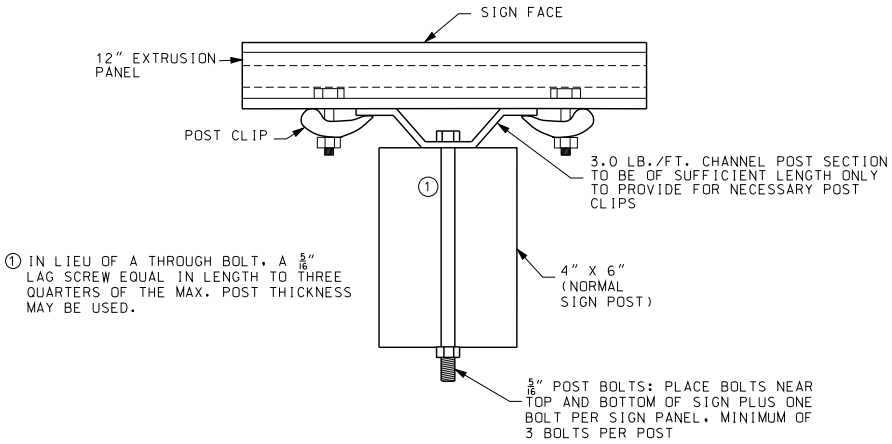

PLAN VIEW

MOUNTING DETAILS FOR EXTRUDED PANELS ON WOOD 4" X 6" POST

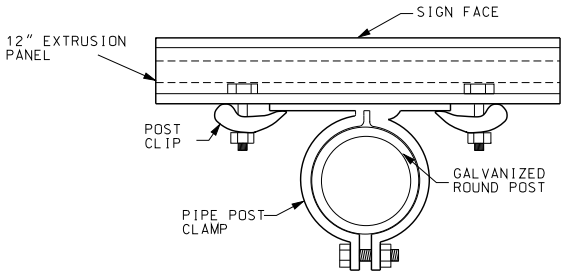

PLAN VIEW

MOUNTING DETAILS FOR EXTRUDED PANELS ON ROUND PIPE POST

NUMBER OF BOLTS TO ATTACH STEEL CHANNEL TO WOOD POST	
SIGN HEIGHT	NO. OF BOLTS* PER WOOD POST USED
1'	2
2'	3
3'	4
4'	5
5'	6
6'	7
7'	8

*LAG SCREWS MAY BE SUBSTITUTED

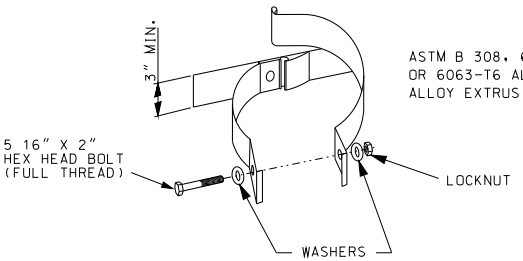

STAINLESS STEEL HARDWARE

CLAMP TYPE SIGN SUPPORT FOR PIPE POST

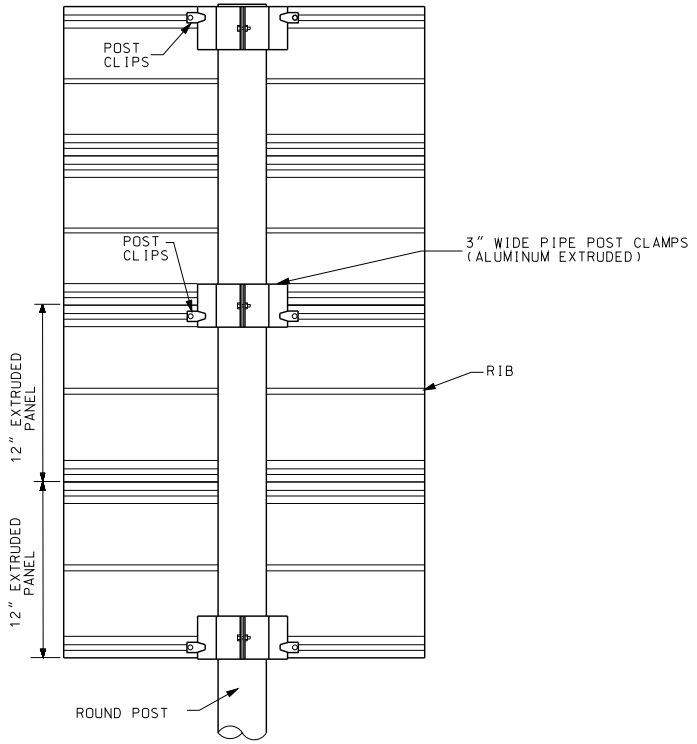

TYPICAL POST CLIP MOUNTING DETAILS FOR ROUND PIPE POSTS

GENERAL NOTES:

IF A SEAL IS PRESENT ON THIS SHEET IT HAS BEEN ELECTRONICALLY SEALED AND DATED.

MISSOURI HIGHWAYS AND TRANSPORTATION COMMISSION
105 WEST CAPITOL
JEFFERSON CITY, MO 65102
1-888-ASK-MODOT (1-888-275-6636)

STATE OF MISSOURI
KATHRYN PHILLIPS HARVEY
NUMBER PE-23751
PROFESSIONAL ENGINEER
THIS SHEET HAS BEEN SIGNED, SEALED AND DATED ELECTRONICALLY.

SIGN MOUNTING DETAILS

EXTRUDED PANEL ATTACHMENTS FOR SIGNS 30 SQ. FT. OR SMALLER

DATE EFFECTIVE: 02/01/2012
DATE PREPARED: 12/19/2011

903.03BH

SHEET NO. 11 OF 11

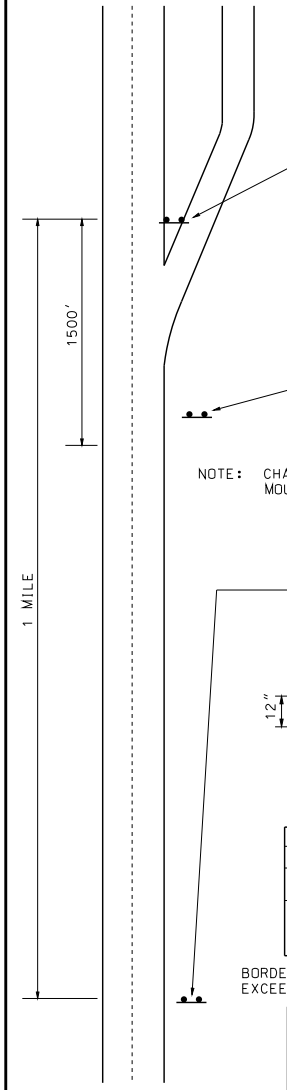

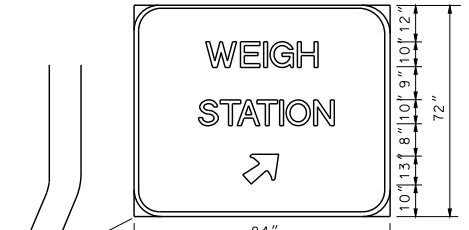

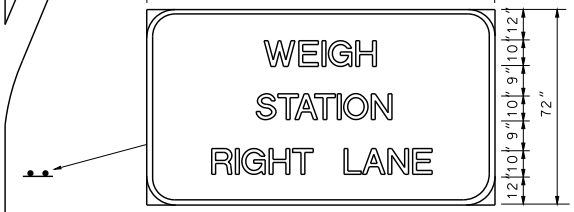

NOTE: CHANGEABLE "OPEN/CLOSE" AND "BUSES WEIGH" SIGNS MOUNTED BELOW THIS SIGN. SEE DETAILS THIS SHEET.

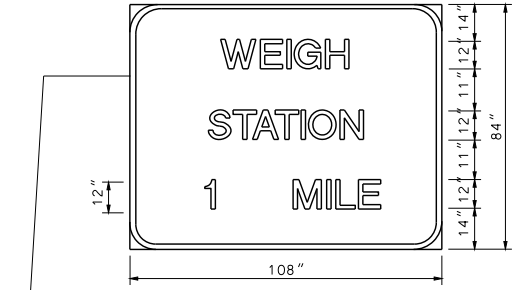

BORDER			
CORNER RADII		WIDTH	
MINIMUM SIGN DIM.	IN.	SIGN SIZE	IN.
5' OR LESS	6	6' x 10' OR LARGER	2
FROM 5' TO 7'	9		
OVER 7'	12	LESS THAN 6' x 10'	1⅛

BORDER WIDTH SHALL BE AS SHOWN ON CHART BUT NOT TO EXCEED THE STROKE WIDTH OF THE MAJOR LETTERING ON SIGN.

GENERAL SIGN DATA				
STR1L-3	TYPE	REFLECTIVE SHEETING TYPE	COLOR	LETTER SERIES
BACKGROUND		1	GREEN	
LEGEND	L-3	4	WHITE	E
SYMBOLS	L-3	4	WHITE	
BORDER	L-3	4	WHITE	
SUBSTRATE	STRUCTURAL			

GUIDE SIGN DETAIL

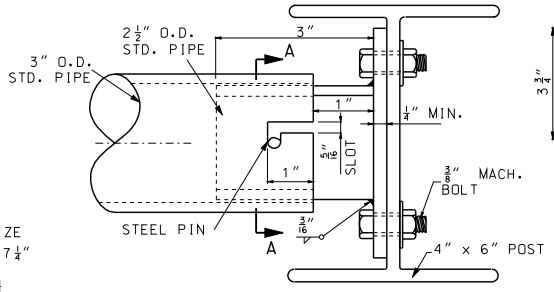

ASSEMBLY SHALL BE GALVANIZED AFTER FABRICATION

PLAN VIEW

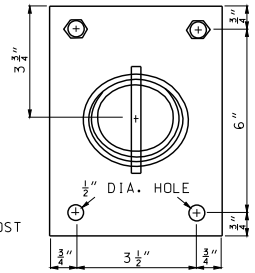

SECTION A-A

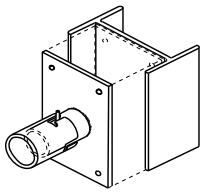

ISOMETRIC VIEW

BUSES WEIGH MOUNTING ASSEMBLY

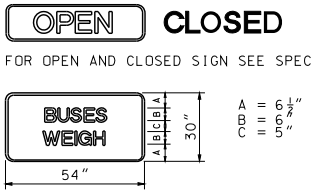

FOR OPEN AND CLOSED SIGN SEE SPECIAL PROVISIONS

MAXIMUM HEIGHT FROM BOTTOM OF BUSES WEIGH SIGN TO GROUND SHALL BE 60".

GENERAL SIGN DATA				
SHR1L-3	TYPE	REFLECTIVE SHEETING TYPE	COLOR	LETTER SERIES
BACKGROUND		1	GREEN	
LEGEND	L-3	4	WHITE	E
SYMBOLS				
BORDER	L-3	4	WHITE	
SUBSTRATE	SHEET			

CHANGEABLE SIGN DETAIL

SUBSTRATE
ST STRUCTURAL
SH SHEET

LEGEND, SYMBOLS, & BORDER
L-1 SCREEN PRINT
L-3 DIRECT APPLIED (CUT FROM MATERIAL SHOWN ON PLANS.)

REFLECTIVE SHEETING
R1 ENGINEERING GRADE IN ACCORDANCE WITH SEC 1042.2.7.1
R4 PRISMATIC IN ACCORDANCE WITH SEC 1042.2.7.3

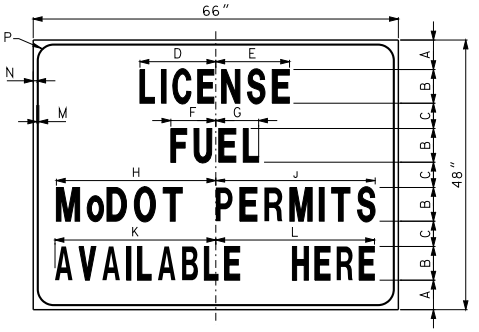

SIGN	A	B	C	D	E	F	G	H	J	K	L	M	N	P
R21-1	5¼"	6"	4½"	13½"	13⅛"	8"	7⅝"	28⅜"	28⅜"	28⅝"	28¼"	⅝"	⅜"	3"

GENERAL SIGN DATA				
SHR1L-1	TYPE	REFLECTIVE SHEETING TYPE	COLOR	LETTER SERIES
BACKGROUND		1	WHITE	
LEGEND	L-1		BLACK	C
SYMBOLS				
BORDER	L-1		BLACK	
SUBSTRATE	SHEET			

PERMIT SIGN DETAIL

MATERIAL LIST		
NO.	DESCRIPTION	LB.
2	¼" STEEL PLATE	2.26
1	3" STANDARD PIPE	32.44
2	2-1/2" STANDARD PIPE	3.89
8	⅜" GALV. MACH. BOLT	
8	GALV. WASHER	

GENERAL NOTES:

DESIGN SPECS: AASHTO STANDARD SPECIFCATIONS FOR STRUCTURAL SUPPORTS FOR HIGHWAY SIGNS, LUMINARES, AND TRAFFIC SIGNALS - 1975.

MATERIALS AND FABRICATION SHALL CONFORM TO THE REQUIREMENTS OF THE STATE HIGHWAY AND TRANSPORTATION COMMISSION STANDARD SPECIFICATIONS AND PROVISIONS.

MISSOURI HIGHWAYS AND TRANSPORTATION COMMISSION
105 WEST CAPITOL
JEFFERSON CITY, MO 65102
1-888-ASK-MODOT (1-888-275-6636)

STATE OF MISSOURI
KATHRYN PHILLIPS HARVEY
NUMBER PE-23751
PROFESSIONAL ENGINEER
THIS SHEET HAS BEEN SIGNED, SEALED AND DATED ELECTRONICALLY.

HIGHWAY SIGNING
WEIGH STATION

DATE EFFECTIVE: 02/01/2012
DATE PREPARED: 12/19/2011

903.04F

SHEET NO. 1 OF 1

IF A SEAL IS PRESENT ON THIS SHEET IT HAS BEEN ELECTRONICALLY SEALED AND DATED.

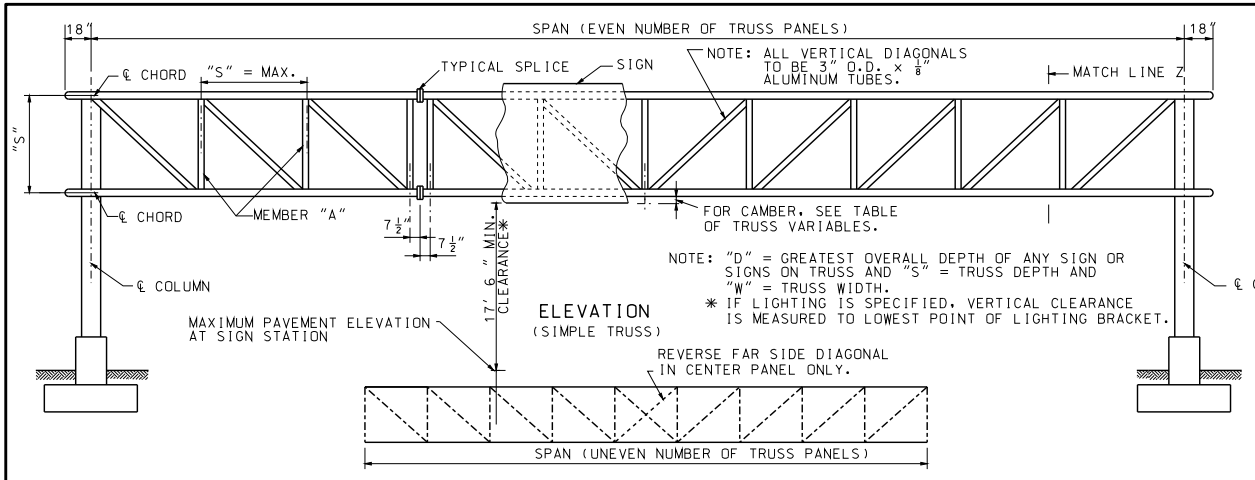

TRUSS ELEVATION

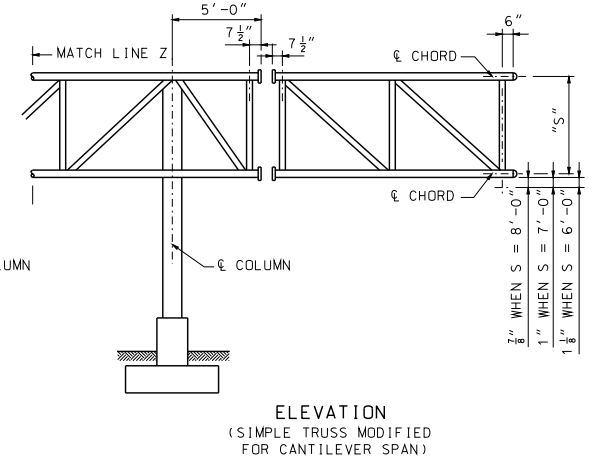

ELEVATION
(SIMPLE TRUSS MODIFIED FOR CANTILEVER SPAN)

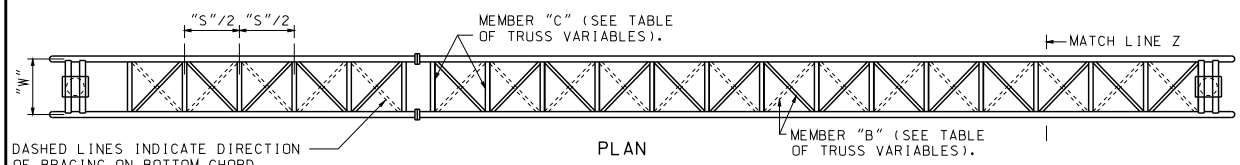

PLAN

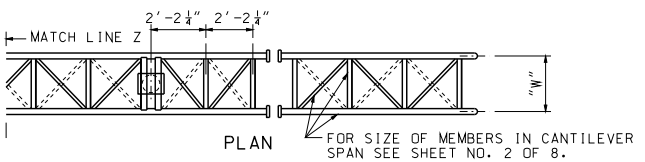

PLAN

FOR SIZE OF MEMBERS IN CANTILEVER SPAN SEE SHEET NO. 2 OF 8.

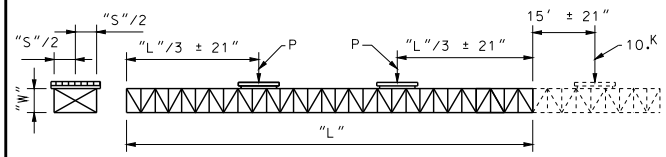

$P = \frac{84aW}{L} - 0.02\,L$ WHERE

- P = CONCENTRATED LOAD IN KIPS.
- a = AREA OF ONE CHORD TUBE IN SQUARE INCHES. (USE 0.76a FOR 4" DIA. x 1/4" AND 4 1/2" DIA. x 1/4" CHORDS)
- W = WIDTH OF TRUSS IN FEET.
- L = SPAN LENGTH IN FEET.

SAMPLE, GIVEN: a = 4.123 SQ. IN., W = 6'-0" AND L = 100'.

SOLUTION: $P = \frac{84 \times 4.123 \times 6.0}{100} - 0.02 \times 100 = 20.8 - 2 = 18.8$

NOTE:
IF CANTILEVERED, REMOVE CONCENTRATED LOAD NEAREST CANTILEVER END AND LOAD CANTILEVER SPAN AS SHOWN ABOVE.

15' OR LESS CANTILEVER SPANS NEED NOT BE TESTED.

REPEAT ABOVE TESTS BY ROTATING 180° (TO SIMULATE WIND REVERSAL). NO VERTICAL LOAD (D.L.) TEST WILL BE REQUIRED.

LOADS P SHALL NOT BE MORE THAN 16° FOR SPANS LESS THAN 55 FEET AND 20°. FOR ALL OTHERS.

SIMULATED WIND-SHOP TEST LOADING

TRUSS VARIABLES

SPAN	"S"	"W"	MEMBER "A"	MEMBER "B"	MEMBER "C"	SHOP CAMBER
UP TO 70'-6"	6'-0"	5'-0"	2 1/2" DIA. x 1/8"	2 1/2" DIA. x 1/8"	1 3/4" DIA. x 1/8"	3/4"
71' TO 80'-6"	6'-0"	6'-0"	2 1/2" DIA. x 1/8"	2 1/2" DIA. x 1/8"	2" DIA. x 1/8"	1 1/4"
81' TO 90'-6"	6'-0"	6'-0"	2 1/2" DIA. x 1/8"	2 3/4" DIA. x 1/8"	2" DIA. x 1/8"	1 1/2"
91' TO 100'-6"	6'-0"	6'-0"	2 1/2" DIA. x 1/8"	2 3/4" DIA. x 1/8"	2" DIA. x 1/8"	2 1/4"
101' TO 110'-6"	7'-0"	7'-0"	2 1/2" DIA. x 1/8"	3" DIA. x 1/8"	2 1/4" DIA. x 1/8"	2 1/2"
111' TO 120'-6"	7'-0"	7'-0"	2 1/2" DIA. x 1/8"	3 1/2" DIA. x 1/8"	2 1/4" DIA. x 1/8"	2 3/4"
121' TO 130'-6"	7'-0"	7'-0"	3" DIA. x 1/8"	3 1/2" DIA. x 1/8"	2 1/4" DIA. x 1/8"	3 3/4"
131' TO 140'-6"	8'-0"	7'-0"	3" DIA. x 1/8"	3 3/4" DIA. x 1/8"	2 1/2" DIA. x 1/8"	3"
141' TO 150'-6"	8'-0"	7'-0"	3" DIA. x 1/8"	3 3/4" DIA. x 1/8"	2 3/4" DIA. x 1/8"	3 3/4"
151' TO 160'-6"	8'-0"	7'-0"	3" DIA. x 1/8"	3 3/4" DIA. x 1/8"	2 3/4" DIA. x 1/8"	4 1/2"

NOTE:
FOR SIZE OF CHORD MEMBERS, SEE DATA SHEET. SHOP CAMBER MAY BE PARABOLIC OR STRAIGHT, BUT SHALL BE SYMMETRICAL ABOUT CENTERLINE OF SPAN.

GENERAL NOTES:

ALL STRUCTURAL STEEL AND COLUMN BASE PLATES ASTM A36.

ALL ANCHOR BOLTS ASTM A307.

PROPOSED FIELD SPLICES SHALL BE SHOWN ON SHOP DRAWINGS FOR APPROVAL OF THE ENGINEER.

TRUSSES SHALL BE FABRICATED WITH A MINIMUM OF SPLICING IN TRUSS CHORDS.

FIELD SPLICING WILL NOT BE PERMITTED WITHIN THE MIDDLE ONE-THIRD OF SPAN.

PERMISSIBLE VENT HOLES (MAXIMUM 1/8" DIAMETER) SHALL BE PLACED A MINIMUM OF

3" FROM WELD ON LOW SIDE OF HORIZONTAL, VERTICAL AND DIAGONAL TUBES.

FOR ADDITIONAL INFORMATION SEE DATA SHEET.

MISSOURI HIGHWAYS AND TRANSPORTATION COMMISSION
105 WEST CAPITOL
JEFFERSON CITY, MO 65102
1-888-ASK-MODOT (1-888-275-6636)

STATE OF MISSOURI
KATHRYN PHILLIPS HARVEY
NUMBER PE-23751
PROFESSIONAL ENGINEER
THIS SHEET HAS BEEN SIGNED, SEALED AND DATED ELECTRONICALLY.

OVERHEAD SIGN TRUSSES

ALUMINUM

DATE EFFECTIVE: 10/01/2011
DATE PREPARED: 9/30/2011

903.10BB

SHEET NO. 1 OF 6

IF A SEAL IS PRESENT ON THIS SHEET IT HAS BEEN ELECTRONICALLY SEALED AND DATED.

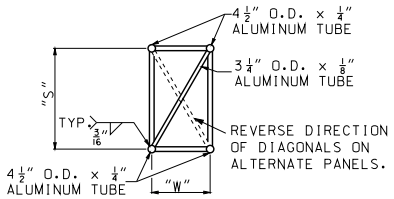

SECTION A-A

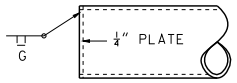

DETAIL OF ALTERNATE END CAP

NOTE:
WHEN THE VERTICALS, STRUTS AND SWAYS OBSTRUCT THE PLACING OF BOLTS IN THE FLANGES THESE MEMBERS MAY BE MOVED BACK IN ORDER TO CLEAR THE BOLTS. (ONE SIDE OF SPLICE ONLY).

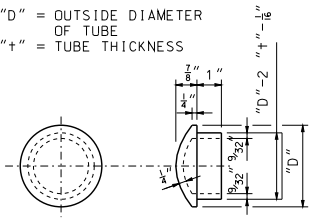

DETAIL OF END CAP CASTING
(DRIVE FIT TYPE)

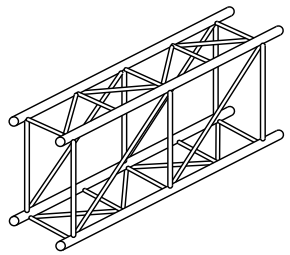

TYPICAL ISOMETRIC VIEW OF TRUSS

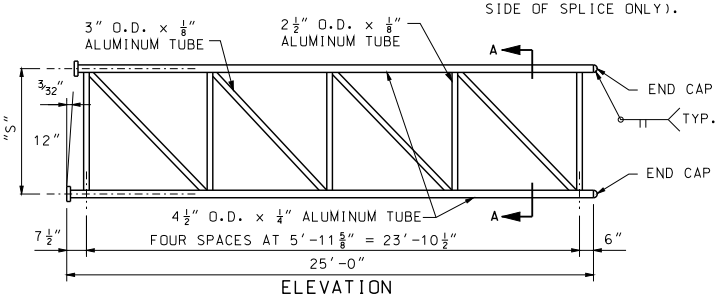

ELEVATION

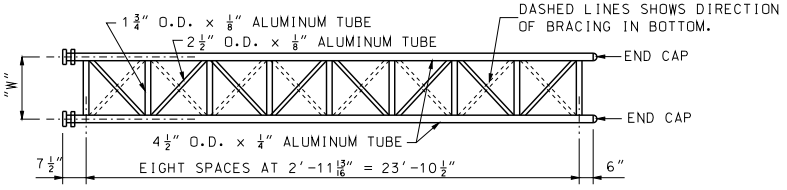

PLAN

25' - CANTILEVER SECTIONS

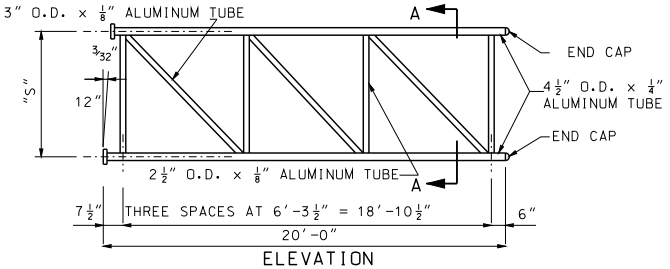

ELEVATION

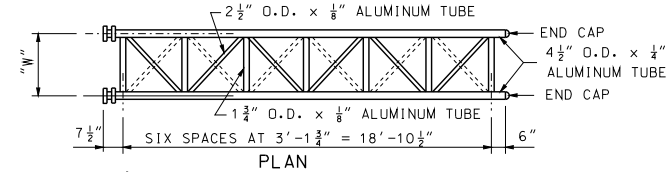

PLAN

20' - CANTILEVER SECTIONS

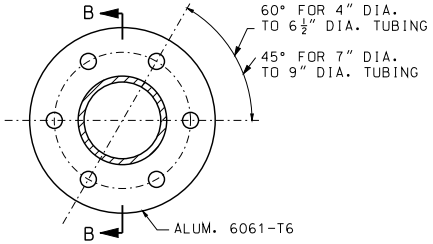

PLAN OF FLANGE PLATE

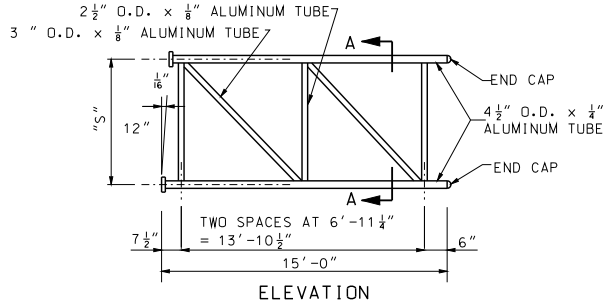

ELEVATION

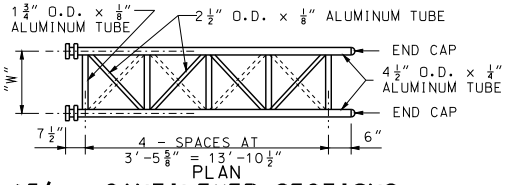

PLAN

15' - CANTILEVER SECTIONS

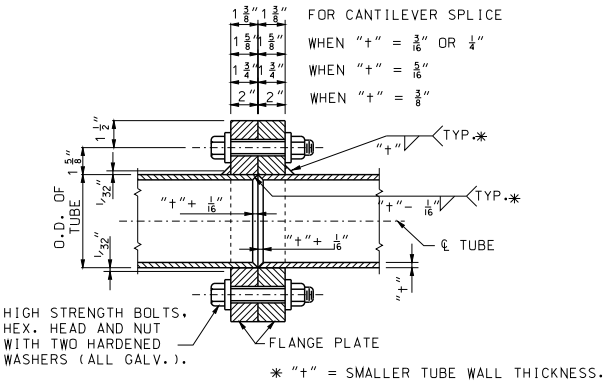

* "t" = SMALLER TUBE WALL THICKNESS.

SECTION B-B

NOTE:
A WELDING SEQUENCE ASSURING FULL CONTACT OF FLANGE FACES SHALL BE REQUIRED. DRILL OR REAM FLANGE HOLES 1/16" LARGER THAN NORMAL DIAMETER OF BOLTS OR TUBING.

TUBE SIZE	BOLT NO. AND DIA.	TORQUE
4" DIA. TO ALL DIAMETERS	6- ¾" DIA.	320 FT.LB. OR ONE-HALF TURN
4½" DIA. THROUGH 6½" DIA.	6- ¾" DIA.	320 FT.LB. OR ONE-HALF TURN
7" DIA. THROUGH 7½" DIA.	8- ¾" DIA.	320 FT.LB. OR ONE-HALF TURN
8" DIA. THROUGH 9" DIA.	8- ⅞" DIA.	470 FT.LB. OR ONE-HALF TURN

MISSOURI HIGHWAYS AND TRANSPORTATION COMMISSION
105 WEST CAPITOL
JEFFERSON CITY, MO 65102
1-888-ASK-MODOT (1-888-275-6636)

STATE OF MISSOURI
KATHRYN PHILLIPS HARVEY
NUMBER PE-23751
PROFESSIONAL ENGINEER
THIS SHEET HAS BEEN SIGNED, SEALED AND DATED ELECTRONICALLY.

OVERHEAD SIGN TRUSSES

ALUMINUM

DATE EFFECTIVE: 10/01/2011
DATE PREPARED: 9/30/2011

903.10BB

SHEET NO. 2 OF 6

IF A SEAL IS PRESENT ON THIS SHEET IT HAS BEEN ELECTRONICALLY SEALED AND DATED.

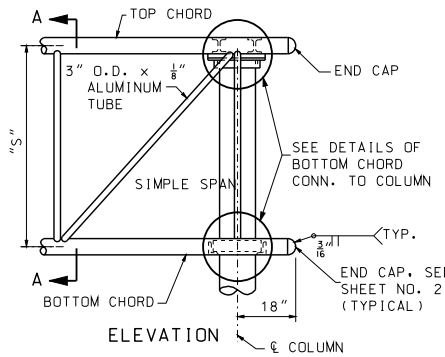

ELEVATION

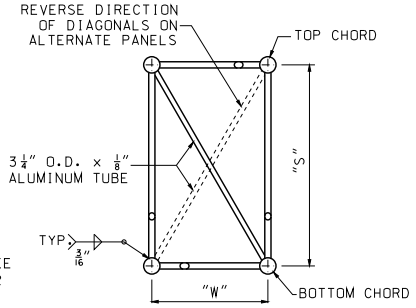

SECTION A-A

NOTE:
FOR DIMENSIONS "S" AND "W" SEE SHEET NO. 1.

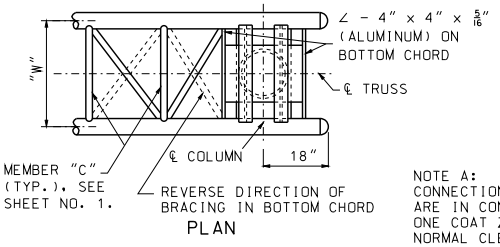

PLAN

TRUSS END WITHOUT CANTILEVER

NOTE A:
CONNECTIONS IN WHICH STEEL AND ALUMINUM ARE IN CONTACT SHALL BE PROTECTED AS FOLLOWS: ONE COAT ZINC CHROMATE ON ALUMINUM SURFACES. NORMAL CLEANING AND PAINTING ON STEEL SURFACES. NO ZINC CHROMATE REQUIRED IF STEEL IS GALVANIZED.

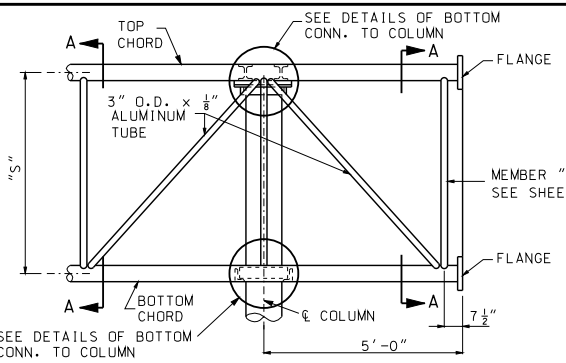

ELEVATION

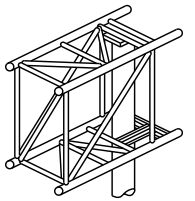

TYPICAL ISOMETRIC VIEW OF END SECTION

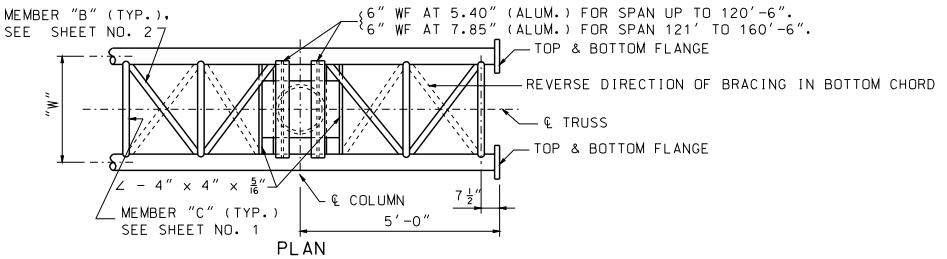

PLAN

TRUSS END MODIFIED FOR CANTILEVER

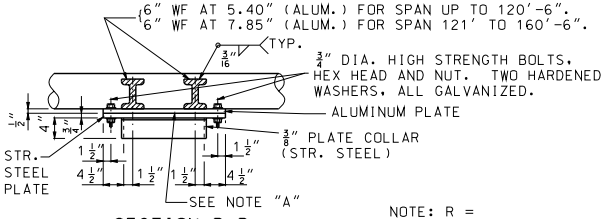

SECTION B-B

NOTE: R = O.D. PIPE COL. / 2 + 1/16"

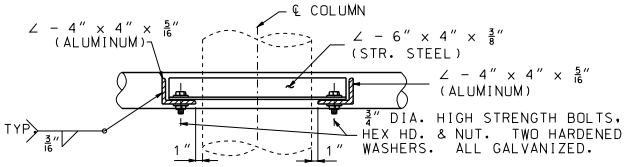

SECTION C-C

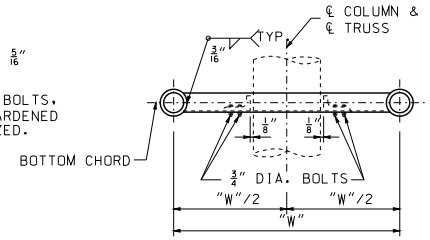

END ELEVATION

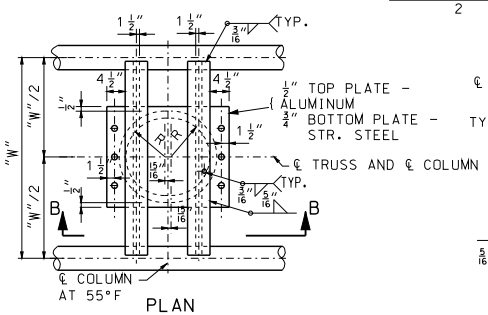

PLAN

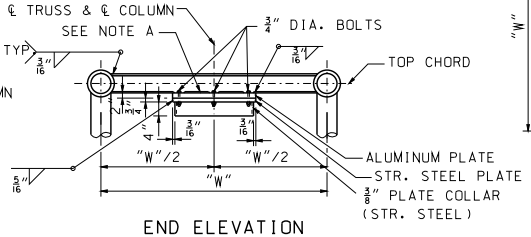

END ELEVATION

DETAIL OF TOP CHORD CONNECTION TO COLUMN

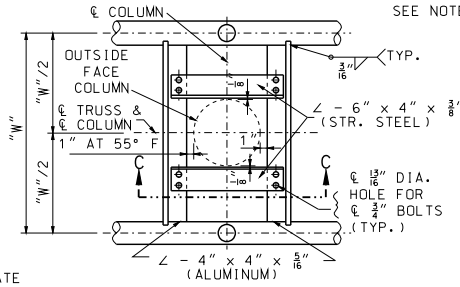

PLAN

DETAILS OF BOTTOM CHORD CONNECTION TO COLUMN

MISSOURI HIGHWAYS AND TRANSPORTATION COMMISSION
105 WEST CAPITOL
JEFFERSON CITY, MO 65102
1-888-ASK-MODOT (1-888-275-6636)

STATE OF MISSOURI
KATHRYN PHILLIPS HARVEY
NUMBER PE-23751
PROFESSIONAL ENGINEER
THIS SHEET HAS BEEN SIGNED, SEALED AND DATED ELECTRONICALLY.

OVERHEAD SIGN TRUSSES

ALUMINUM

DATE EFFECTIVE:	10/01/2011	903.10BB	SHEET NO. 3 OF 6
DATE PREPARED:	9/30/2011		

IF A SEAL IS PRESENT ON THIS SHEET IT HAS BEEN ELECTRONICALLY SEALED AND DATED.

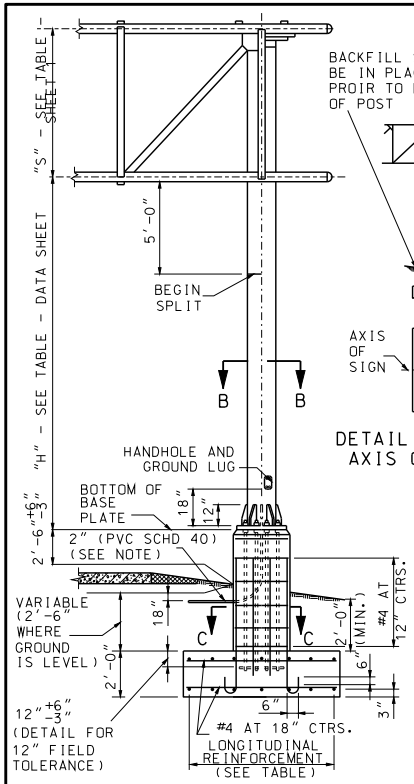

ELEVATION

NOTE:
THE 2" CONDUIT IN THE CONCRETE PEDESTAL SHALL BE PVC SCHEDULE 40 AND SHALL BE PLACED WITH A MINUMUM RADIUS BEND OF 9½".

DETAIL SHOWING AXIS OF SIGN

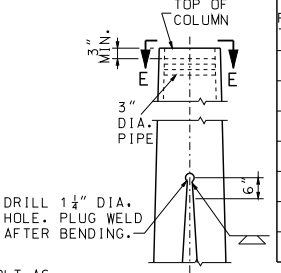

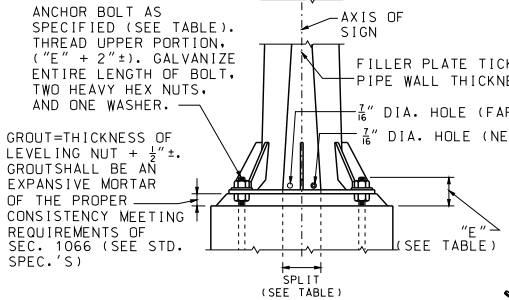

PART ELEVATION

POST TYPE	PIPE COLUMN	DIMENSION "E"	SPLIT	BASE PLATE SIZE*	ANCHOR BOLTS DIA.	PEDESTAL SIZE* a	PEDESTAL SIZE* b	FOOTING SIZE*	LONGITUDINAL FOOTING REINFORCEMENT TOP	LONGITUDINAL FOOTING REINFORCEMENT BOTTOM	CONCRETE C.Y.
I	12" STD. AT 65.42	8½"	6"	2'-6"x 23"x 1½"	6 AT 2¼"	4'-0"	2'-11"	7'-0"x 14'-6"	7-#5 BARS	7-#6 BARS	10.9
II	14" O.D. AT 72.09	8½"	9½"	3'-0"x 2'-0"x 1½"	6 AT 2¼"	4'-4"	3'-0"	8'-0"x 16'-0"	8-#5 BARS	9-#6 BARS	13.2
III	16" O.D. AT 82.77	8¾"	11½"	3'-4"x 2'-2"x 1¾"	6 AT 2¼"	4'-8"	3'-2"	8'-6"x 17'-6"	9-#5 BARS	9-#7 BARS	15.2
IV	18" O.D. AT 93.45	9½"	12½"	3'-7"x 2'-4"x 2"	6 AT 2½"	5'-1"	3'-4"	9'-6"x 19'-0"	10-#5 BARS	10-#8 BARS	18.1
V	20" O.D. AT 104.13	9½"	13"	3'-10"x 2'-9"x 2"	8 AT 2½"	5'-4"	3'-9"	10'-0"x 20'-0"	10-#5 BARS	10-#8 BARS	20.6
VI	24" O.D. AT 125.49	9½"	10½"	4'-0"x 3'-3"x 2"	8 AT 2½"	5'-6"	4'-3"	10'-6"x 21'-0"	11-#5 BARS	11-#8 BARS	23.3
VII	24" O.D. AT 125.49	9½"	13½"	4'-3"x 3'-3"x 2"	8 AT 2½"	5'-9"	4'-3"	11'-0"x 22'-0"	11-#5 BARS	11-#9 BARS	25.1

* BASE PLATES, PEDESTAL, AND FOOTINGS, LONGER SIDES SHALL BE NORMAL TO AXIS OF SIGN.

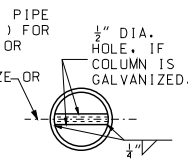

PART SECTION E-E

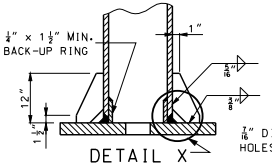

PART SECTION A-A

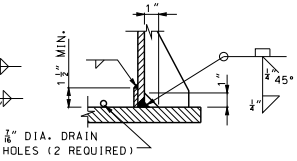

DETAIL X

GENERAL NOTES:

A TAPERED TUBE OF EQUIVALENT SIZE AND THICKNESS MAY BE SUBSTITUTED FOR PIPE POST.

ALL STEEL PIPE COLUMNS SHALL BE EITHER GRADE "B" SEAMLESS STEEL PIPE OR GRADE "B" ELECTRIC RESISTANCE WELDED STEEL PIPE; A.S.T.M. SPECIFICATION A53. NO OBJECTIONABLE SEAMS WILL BE PERMITTED.

ALL STRUCTURES SHALL BE GROUNDED.

BURR THREADS ON ALL ANCHOR BOLTS.

A HORIZONTAL WELDED SPLICE MAY BE FABRICATED IN THE COLUMN BETWEEN THE TOP OF PIPE AND 4'-0" BELOW THE BOTTOM CHORDS OF THE TRUSS WHEN DETAILED ON THE PIPE AND 4'-0" BELOW THE BOTTOM CHORDS OF THE TRUSS WHEN DETAILED ON THE SHOP DRAWINGS AND APPROVED BY THE ENGINEER.

GROUND LUGS SHALL BE LOCATED INSIDE COLUMN NEAR HAND HOLE.

QUANTITIES FOR PEDESTAL, BASED ON NOMINAL HEIGHT OF 5'-0".

QUANTITIES FOR FOOTING, BASED ON NOMINAL DEPTH OF 2'-0".

QUANTITIES SHOWN ARE FOR ONE COLUMN ONLY.

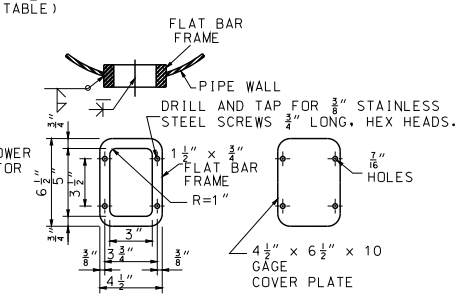

HANDHOLE AND COVER DETAIL

NOTE: HANDHOLE REQUIRED ONLY IN POWER COLUMN.

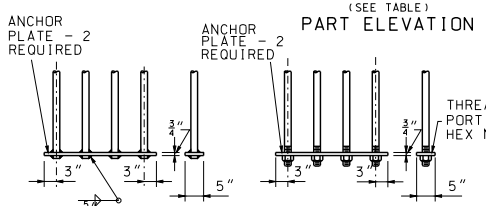

ANCHORAGE DETAIL A

ANCHORAGE DETAIL B (OPTIONAL)

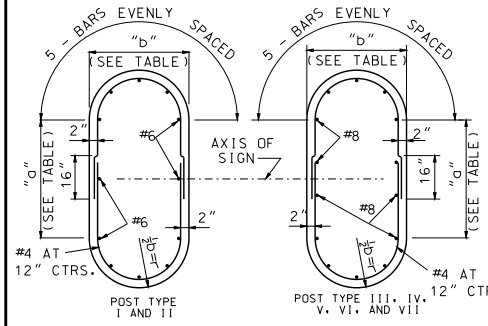

SECTION C-C
(TYPICAL SECTION SHOWING REINFORCING STEEL)
NOTE: FOR DETAILS OF ALTERNATE PEDESTAL, SEE SHEET NO. 5 OF 6.

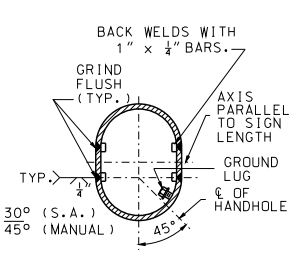

SECTION B-B
(FOR SPLIT COLUMNS ONLY)

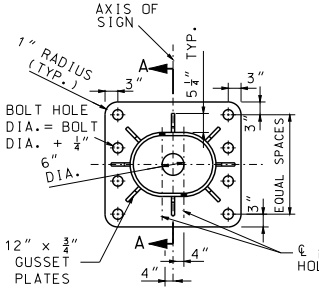

8 ANCHOR TYPE

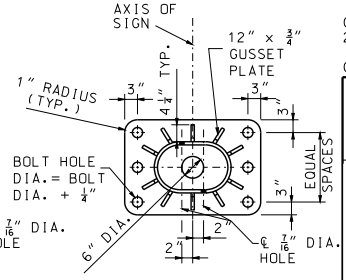

6 ANCHOR TYPE

TYPICAL BASE PLATES

MISSOURI HIGHWAYS AND TRANSPORTATION COMMISSION
105 WEST CAPITOL
JEFFERSON CITY, MO 65102
1-888-ASK-MODOT (1-888-275-6636)

STATE OF MISSOURI
KATHRYN PHILLIPS HARVEY
NUMBER PE-23751
PROFESSIONAL ENGINEER
THIS SHEET HAS BEEN SIGNED, SEALED AND DATED ELECTRONICALLY.

OVERHEAD SIGN TRUSSES

ALUMINUM

DATE EFFECTIVE: 10/01/2011
DATE PREPARED: 9/30/2011

903.10BB

SHEET NO. 4 OF 6

IF A SEAL IS PRESENT ON THIS SHEET IT HAS BEEN ELECTRONICALLY SEALED AND DATED.

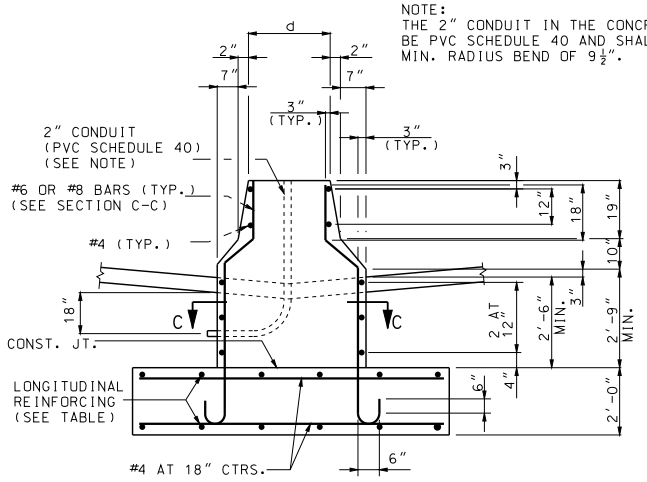

PART ELEVATION
(TYPE A CONCRETE TRAFFIC BARRIER)

POST TYPE	PIPE COLUMN	PEDESTAL SIZE *		FOOTING SIZE *	LONGITUDINAL FOOTING REINFORCEMENT		CONCRETE C.Y.	
		c	d		TOP	BOTTOM	TYPE A MEDIAN BARRIER	TYPE C MEDIAN BARRIER
I	12" STD. AT 65.42	5'-9"	2'-1"	7'-0" x 14'-6"	7 - #5 BARS	7 - #6 BARS	10.9	11.6
II	14" O.D. AT 72.09	6'-2"	2'-2"	8'-0" x 16'-0"	8 - #5 BARS	9 - #6 BARS	13.2	14.0
III	16" O.D. AT 82.77	6'-7"	2'-4"	8'-6" x 17'-6"	9 - #5 BARS	9 - #7 BARS	15.2	16.1
IV	18" O.D. AT 93.45	7'-1"	2'-6"	9'-6" x 19'-0"	10 - #5 BARS	10 - #8 BARS	18.1	19.1
V	20" O.D. AT 104.13	7'-8"	2'-11"	10'-0" x 20'-0"	10 - #5 BARS	10 - #8 BARS	20.6	21.7
VI	24" O.D. AT 125.49	8'-3"	3'-5"	10'-6" x 21'-0"	11 - #5 BARS	11 - #8 BARS	23.3	24.6
VII	24" O.D. AT 125.49	8'-6"	3'-5"	11'-0" x 22'-0"	11 - #5 BARS	11 - #9 BARS	25.1	26.5

* BASE PLATES, PEDESTAL, AND FOOTINGS LONGER SIDES SHALL BE NORMAL TO AXIS OF SIGN.

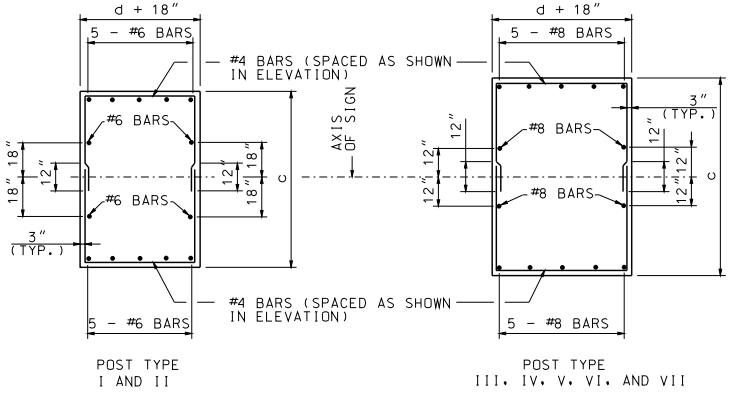

POST TYPE I AND II

POST TYPE III, IV, V, VI, AND VII

SECTION C-C

TYPICAL SECTION SHOWING REINFORCING STEEL

NOTE:
THE 2" CONDUIT IN THE CONCRETE PEDESTAL SHALL BE PVC SCHEDULE 40 AND SHALL BE PLACED WITH A MIN. RADIUS BEND OF 9½".

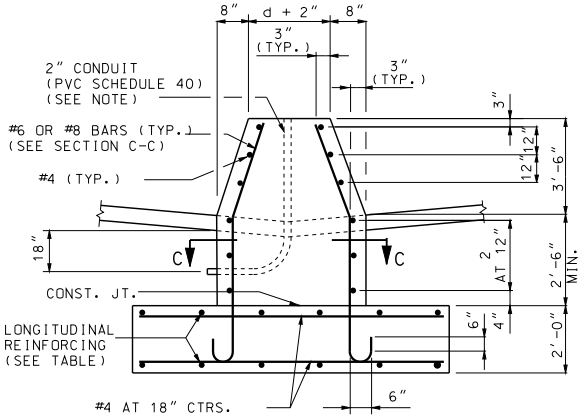

PART ELEVATION
(TYPE C CONCRETE TRAFFIC BARRIER)

DETAILS OF ALTERNATE PEDESTAL

(TO BE USED ADJACENT TO TYPE "A" OR "C" MEDIAN BARRIER)

GENERAL NOTES:

A TAPERED TUBE OF EQUILVALENT SIZE AND THICKNESS MAY BE SUBSTITUTED FOR PIPE POST.

ALL STEEL PIPE COLUMNS SHALL BE EITHER GRADE "B" SEAMLESS STEEL PIPE OR GRADE "B" ELECTRIC RESISTANCE WELDED STEEL PIPE: A.S.T.M. SPECIFICATION A53.

NO OBJECTIONABLE SEAMS WILL BE PERMITTED.

ALL STRUCTURES SHALL BE GROUNDED.

BURR THREADS ON ALL ANCHOR BOLTS.

PIPE COLUMN, BASE PLATE, ANCHOR BOLTS AND NOTES PERTAINING TO THESE ITEMS HAVE BEEN OMITTED FOR CLARITY. REFER TO SHEET NO. 4 OF 6 FOR DETAILS OF THESE ITEMS.

GROUND LUGS SHALL BE LOCATED INSIDE COLUMN NEAR HAND HOLE.

QUANTITIES FOR PEDESTAL, BASED ON NOMINAL HEIGHT OF 5'-2" (TYPE A MEDIAN BARRIER) OR 6'-0" (TYPE C MEDIAN BARRIER).

QUANTITIES FOR FOOTING, BASED ON NOMINAL DEPTH OF 2'-0".

QUANTITIES SHOWN ARE FOR ONE COLUMN ONLY.

MISSOURI HIGHWAYS AND TRANSPORTATION COMMISSION
105 WEST CAPITOL
JEFFERSON CITY, MO 65102
1-888-ASK-MODOT (1-888-275-6636)

STATE OF MISSOURI
KATHRYN PHILLIPS HARVEY
NUMBER PE-23751
PROFESSIONAL ENGINEER
THIS SHEET HAS BEEN SIGNED, SEALED AND DATED ELECTRONICALLY.

OVERHEAD SIGN TRUSSES

ALUMINUM

DATE EFFECTIVE: 10/01/2011
DATE PREPARED: 9/30/2011

903.10BB

SHEET NO. 5 OF 6

IF A SEAL IS PRESENT ON THIS SHEET IT HAS BEEN ELECTRONICALLY SEALED AND DATED.

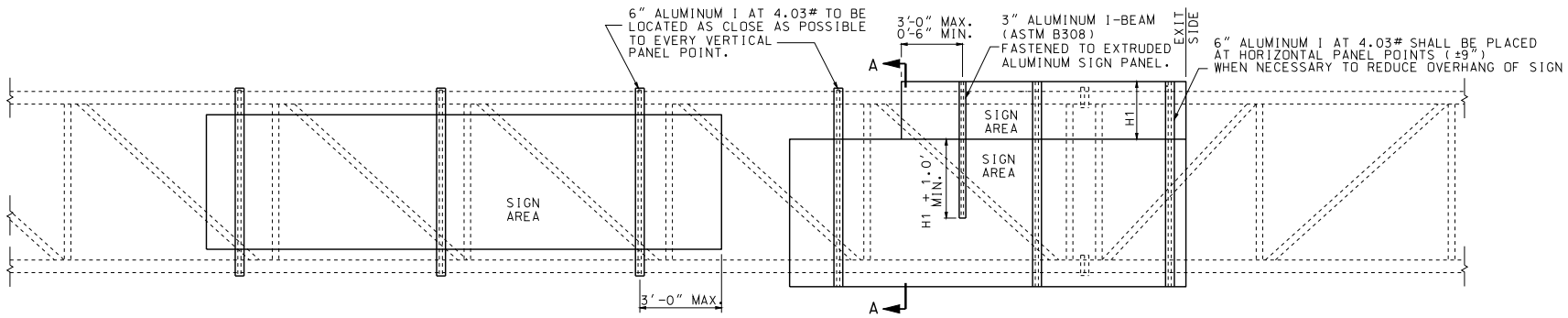

TYPICAL ELEVATION OF SIGN COMPONENTS

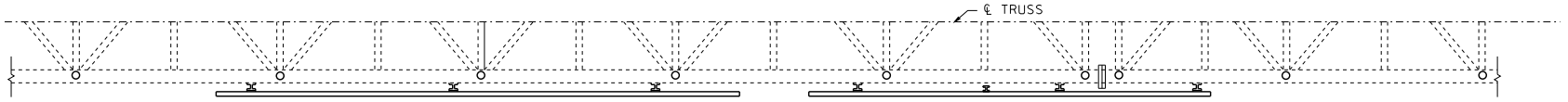

TYPICAL HALF PLAN OF SIGN COMPONENTS

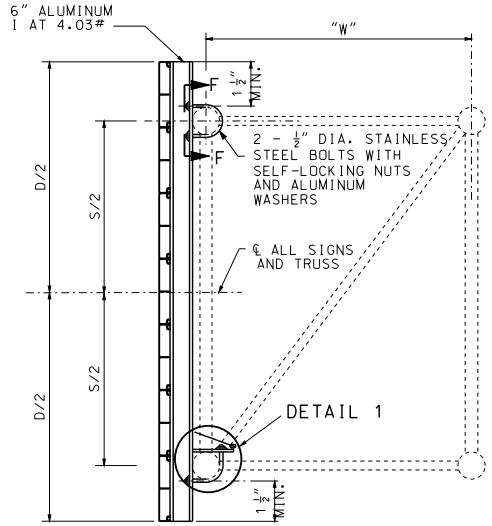

SECTION A-A

TYPICAL SECTION OF SIGN SUPPORT

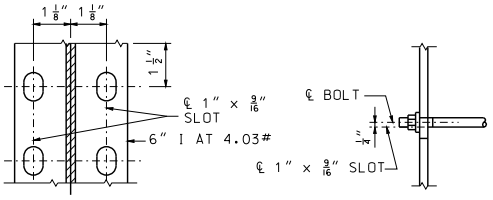

SECTION F-F

DETAIL 2

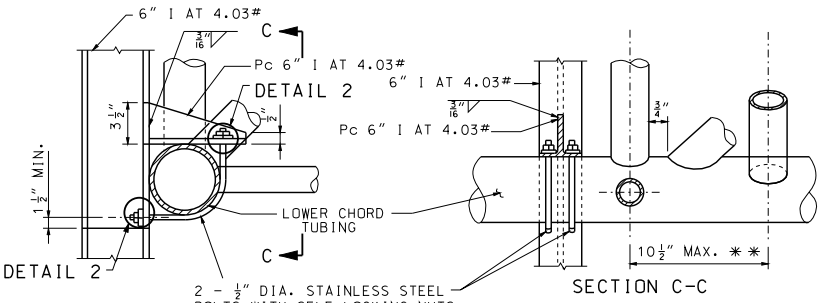

DETAIL 1

SECTION C-C

** LOCATE THE INTERIOR DIAGONAL AS CLOSE AS POSSIBLE TO THE CENTERLINE OF THE PANEL POINT WITHOUT OVER-LAPPING WELDS.

GENERAL NOTES:

EXIT NO. PANELS SHALL BE MOUNTED FLUSH WITH THE EXIT SIDE OF THE GUIDE SIGN.

ALL SIGNS SHALL BE CENTERED VERTICALLY ABOUT THE HORIZONTAL ℄ OF THE TRUSS.

SEE STD. PLAN 903.09 FOR LIGHTING DETAILS IF LIGHTING THE SIGN IS NECESSARY.

SEE STD. PLAN 903.03 FOR SIGN MOUNTING DETAILS.

ALL MATERIAL ALUMINUM EXCEPT AS NOTED.

MISSOURI HIGHWAYS AND TRANSPORTATION COMMISSION
105 WEST CAPITOL
JEFFERSON CITY, MO 65102
1-888-ASK-MODOT (1-888-275-6636)

STATE OF MISSOURI
KATHRYN PHILLIPS HARVEY
NUMBER PE-23751
PROFESSIONAL ENGINEER
THIS SHEET HAS BEEN SIGNED, SEALED AND DATED ELECTRONICALLY.

OVERHEAD SIGN TRUSSES

ALUMINUM

DATE EFFECTIVE: 10/01/2011
DATE PREPARED: 9/30/2011

903.10BB

SHEET NO. 6 OF 6

IF A SEAL IS PRESENT ON THIS SHEET IT HAS BEEN ELECTRONICALLY SEALED AND DATED.

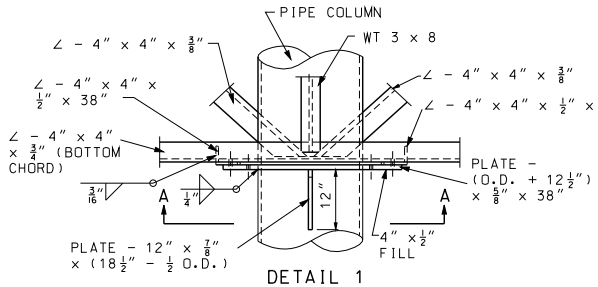

DETAIL 1
TRUSS BOTTOM CONNECTION TO COLUMN

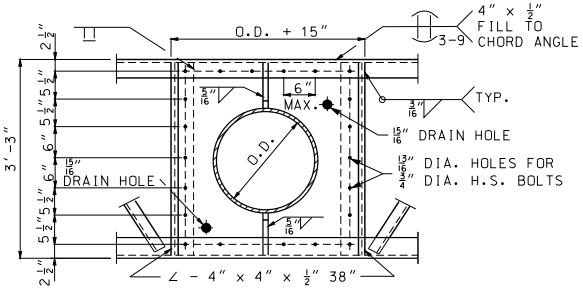

SECTION A-A

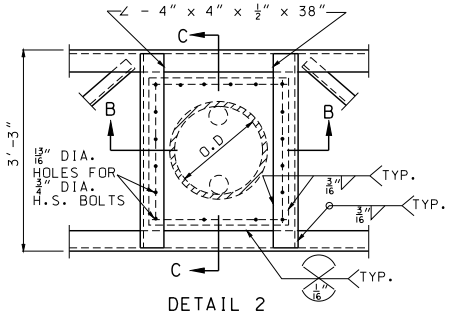

DETAIL 2
TRUSS TOP CONNECTION TO COLUMN

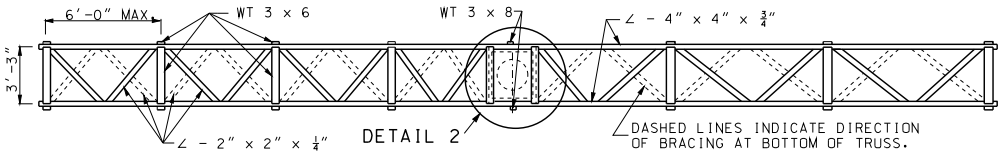

PLAN

* 1 1/4" FOR POST TYPE VII
1 3/4" FOR ALL OTHER POST TYPES

** 3" FOR POST TYPE VII
3 1/2" FOR ALL OTHER POST TYPES

*** 5 1/2" FOR POST TYPE VII
6" FOR ALL OTHER POST TYPES

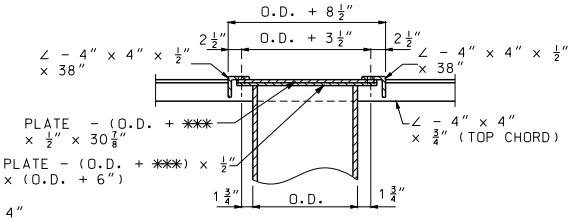

SECTION B-B

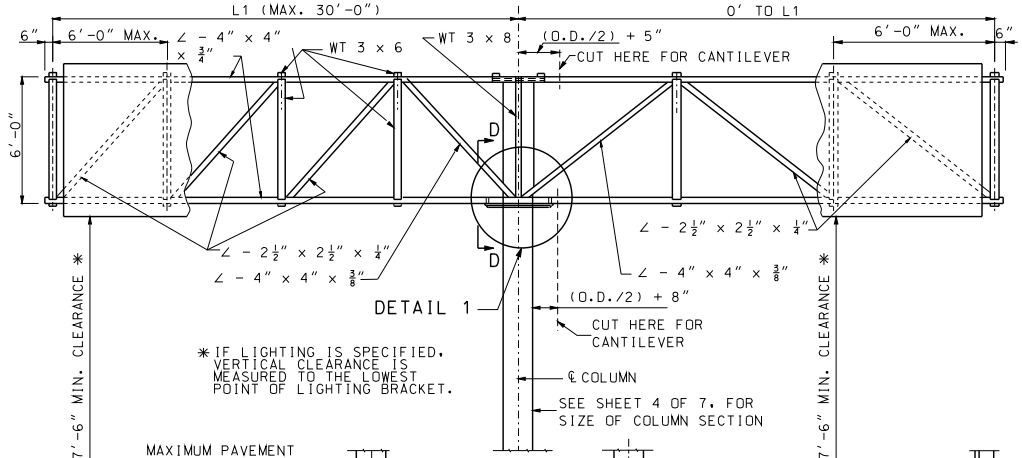

* IF LIGHTING IS SPECIFIED, VERTICAL CLEARANCE IS MEASURED TO THE LOWEST POINT OF LIGHTING BRACKET.

NOTE:
TRUSSES AND COLUMN BASE PLATES: ASTM A36. ANCHOR BOLTS: ASTM A307.
FOR ADDITIONAL INFORMATION, SEE DATA SHEET.

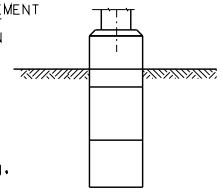

ELEVATION
DRILLED SHAFT OPTION

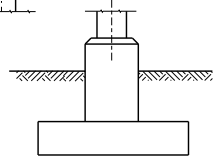

ELEVATION
SPREAD FOOTING OPTION

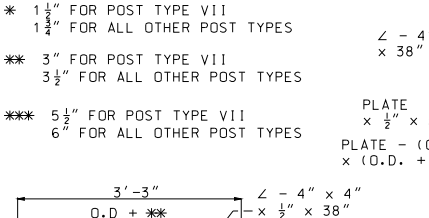

SECTION C-C

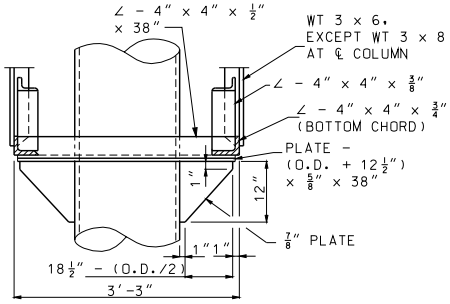

SECTION D-D

GENERAL NOTES:

ALL FASTENERS SHALL HAVE A HARDENED WASHER UNDER THE NUT OR BOLT HEAD, WHICHEVER IS TURNED IN TIGHTENING.

ZINC CHROMATE PRIMER SHALL MEET THE REQUIREMENTS OF FEDERAL SPECIFICATION TT-P-645 OR TT-P-1757 AND SHALL BE ACCEPTED ON THE BASIS OF THE LABEL SHOWING CONFORMANCE OR A MANUFACTURER'S CERTIFICATION.

DESIGN OF STRUCTURAL SUPPORTS SHALL COMPLY WITH AASHTO STANDARD SPECIFICATIONS FOR STRUCTURAL SUPPORTS FOR HIGHWAY SIGNS, LUMINAIRES AND TRAFFIC SIGNALS 2001 AND CURRENT INTERIMS.

DESIGN OF SPREAD FOOTINGS SHALL COMPLY WITH 1994 AASHTO STANDARD SPECIFICATIONS FOR STRUCTURAL SUPPORTS FOR HIGHWAY SIGNS, LUMINAIRES AND TRAFFIC SIGNALS.

MISSOURI HIGHWAYS AND TRANSPORTATION COMMISSION
105 WEST CAPITOL
JEFFERSON CITY, MO 65102
1-888-ASK-MODOT (1-888-275-6636)

STATE OF MISSOURI
KATHRYN PHILLIPS HARVEY
NUMBER PE-23751
PROFESSIONAL ENGINEER
THIS SHEET HAS BEEN SIGNED, SEALED AND DATED ELECTRONICALLY.

OVERHEAD SIGN TRUSSES

BUTTERFLY AND CANTILEVER
STRUCTURAL STEEL

DATE EFFECTIVE:	12-01-2008	903.12Y	SHEET NO.
DATE PREPARED:	7/19/2012		1 OF 7

IF A SEAL IS PRESENT ON THIS SHEET IT HAS BEEN ELECTRONICALLY SEALED AND DATED.

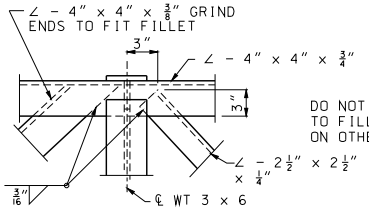

DETAIL 1

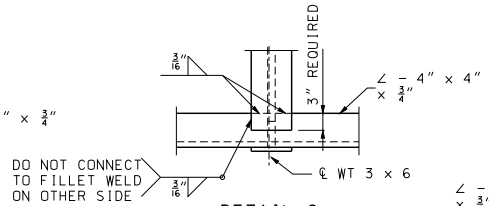

DETAIL 2

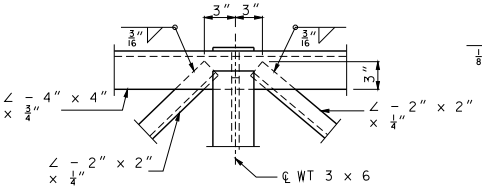

DETAIL 3

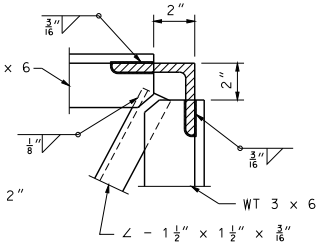

DETAIL 4

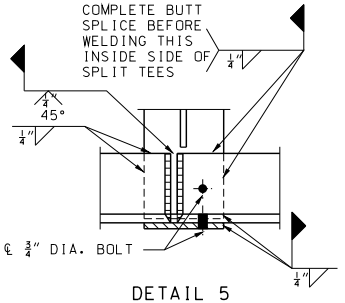

DETAIL 5

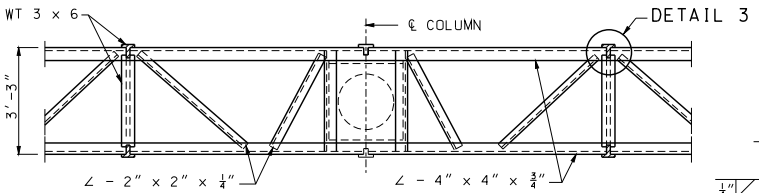

SECTION B-B

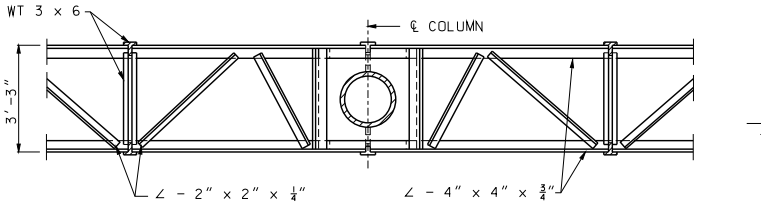

SECTION C-C

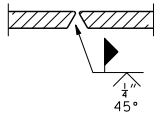

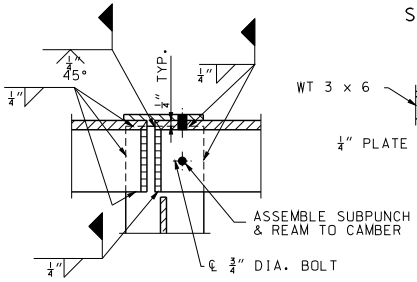

SECTION F-F

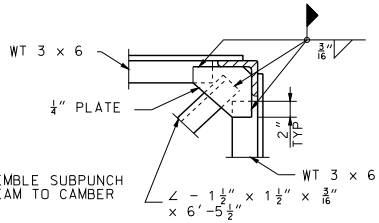

SECTION E-E
(SPLICE ONLY)

NOTE: ¾" DIA. BOLTS SHALL BE REMOVED AFTER WELDING IS COMPLETE. BOLT HOLES SHALL BE PLUGGED AND THE OUTSIDE FACE GROUND SMOOTH.

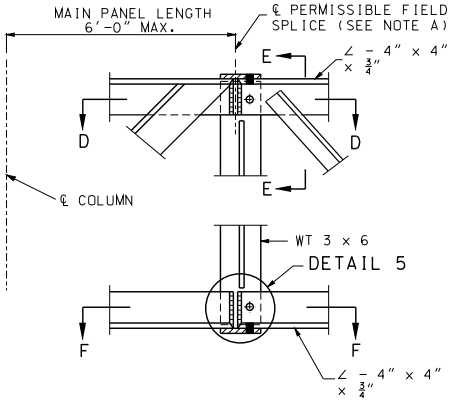

LOCATION OF FIELD SPLICE

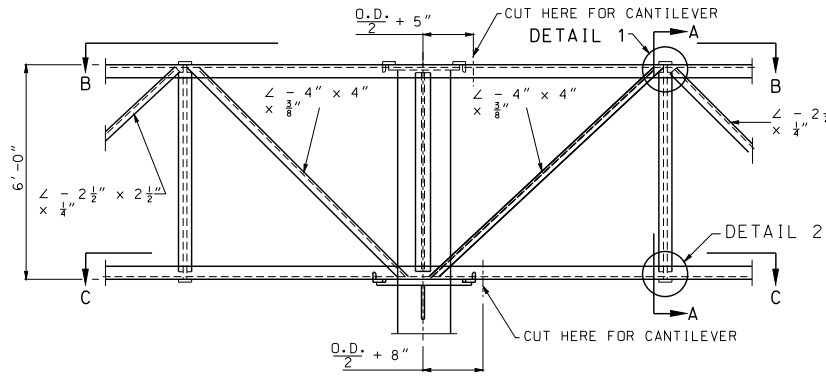

PART ELEVATION OF BUTTERFLY TRUSS

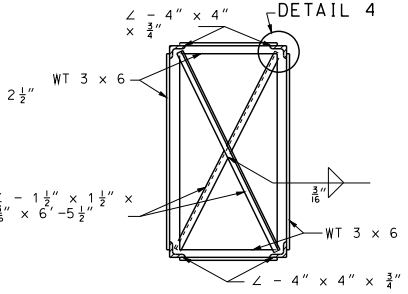

SECTION A-A

NOTE: SHRINK ∠ – 1½" x 1½" x ¾" IF NECESSARY TO TAKE UP DISTORTIONAL SLACK.

NOTE A: SPLICING CHORD ANGLES IN THE SHOP AND THE FIELD SPLICE SHOWN IN THIS SHEET WILL NOT BE ALLOWED WITHOUT SPECIAL PERMISSION. IF PERMISSION IS GRANTED SUCH SPLICES SHALL BE LOCATED AT THE CENTER LINE OF MAIN PANEL POINT NEXT TO COLUMN.

MISSOURI HIGHWAYS AND TRANSPORTATION COMMISSION
105 WEST CAPITOL
JEFFERSON CITY, MO 65102
1-888-ASK-MODOT (1-888-275-6636)

STATE OF MISSOURI
KATHRYN PHILLIPS HARVEY
NUMBER PE-23751
PROFESSIONAL ENGINEER
THIS SHEET HAS BEEN SIGNED, SEALED AND DATED ELECTRONICALLY.

OVERHEAD SIGN TRUSSES
BUTTERFLY & CANTILEVER STRUCTURAL STEEL

DATE EFFECTIVE:	12-01-2008	903.12Y	SHEET NO. 2 OF 7
DATE PREPARED:	7/19/2012		

IF A SEAL IS PRESENT ON THIS SHEET IT HAS BEEN ELECTRONICALLY SEALED AND DATED.

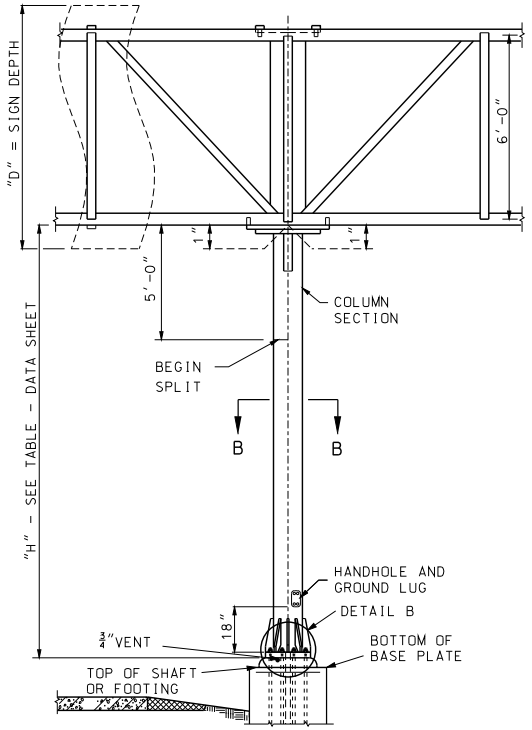

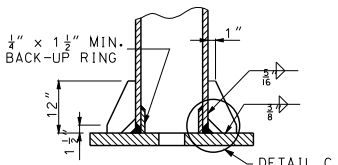

DETAIL B
(SECTION VIEW SHOWN)

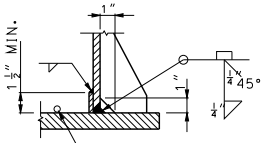

DETAIL C

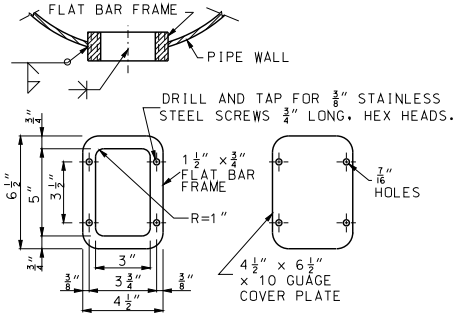

HANDHOLE AND COVER DETAILS

NOTE:
HANDHOLE REQUIRED ONLY IN POWER COLUMN.

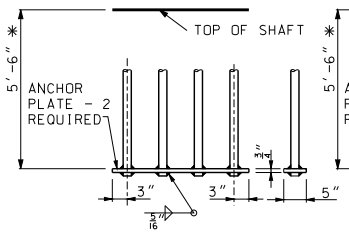

DETAIL A
ANCHORAGE

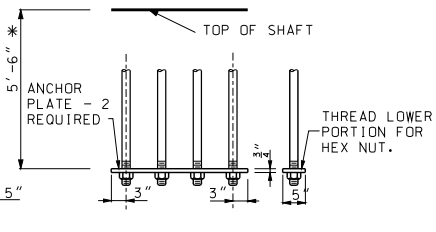

DETAIL A
OPTIONAL ANCHORAGE

(BOTH DETAILS ARE SHOWN FOR 4 BOLTS - SIMILAR FOR 3 BOLTS)
* DIMENSION SHOWN FOR DRILLED SHAFT OPTION. FOR SPREAD FOOTING OPTION REFER TO SHEET 6 OF 7.

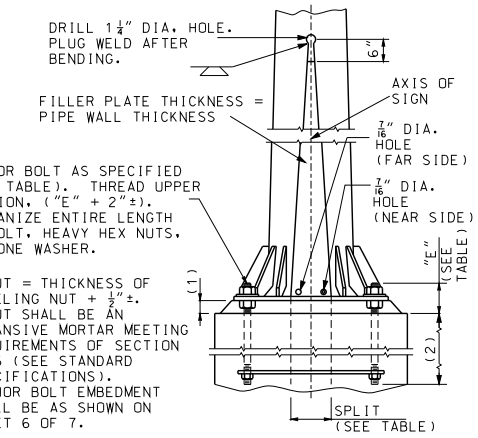

PART ELEVATION

GENERAL NOTES:

SUBSTRUCTURE SHALL BE BACKFILLED PRIOR TO ERECTION OF POST.

ASTM A 106 GRADE B STEEL PIPE OR A TAPERED TUBE OF EQUIVALENT SIZE AND THICKNESS MAY BE SUBSTITUTED FOR PIPE POST.

ALL STEEL PIPE COLUMNS SHALL BE EITHER GRADE "B" SEAMLESS STEEL PIPE OR GRADE "B" ELECTRIC RESISTANCE WELDED STEEL PIPE; A.S.T.M. SPECIFICATION A53.

ALL STRUCTURES SHALL BE GROUNDED.

BURR THREADS ON ALL ANCHOR BOLTS.

A HORIZONTAL WELDED SPLICE MAY BE FABRICATED IN THE COLUMN BETWEEN THE TOP OF PIPE AND 4'-0" BELOW THE BOTTOM CHORDS OF THE TRUSS WHEN DETAILED ON THE SHOP DRAWINGS AND APPROVED BY THE ENGINEER.

GROUND LUGS SHALL BE LOCATED INSIDE COLUMN NEAR HAND HOLE.

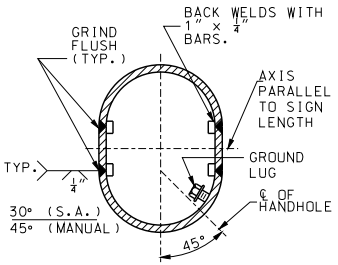

SECTION B-B
(FOR SPLIT COLUMNS ONLY)

TYPICAL BASE PLATE (10 ANCHOR TYPE) BUTTERFLY AND CANTILEVER (B.C.)					
	III	IV	V	VI	VII
A	8"	9"	8"	9"	10½"
B	10"	10"	10"	10"	11"
C	32"	34"	32"	34"	38"
D	13"	14"	16½"	18"	20"
E	32"	34"	39"	42"	46"
F	6"	6"	6"	6"	6"

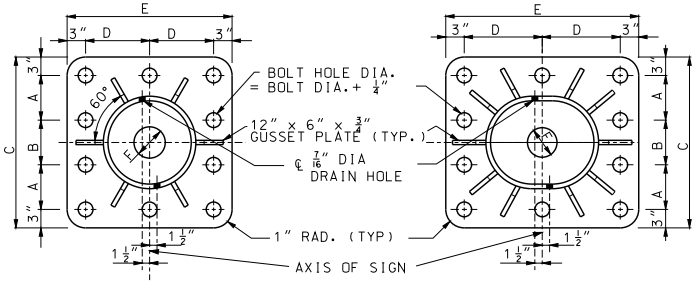

III AND IV B.C.

V, VI, AND VII B.C.

TYPICAL BASE PLATES

NOTE:
FOR DETAILS OF OPTIONAL SUBSTRUCTURES, SEE OTHER SHEETS.

ANCHOR BOLTS AND PLATE NOT SHOWN.

MISSOURI HIGHWAYS AND TRANSPORTATION COMMISSION
105 WEST CAPITOL
JEFFERSON CITY, MO 65102
1-888-ASK-MODOT (1-888-275-6636)

STATE OF MISSOURI
KATHRYN PHILLIPS HARVEY
NUMBER PE-23751
PROFESSIONAL ENGINEER
THIS SHEET HAS BEEN SIGNED, SEALED AND DATED ELECTRONICALLY.

OVERHEAD SIGN TRUSS
COLUMN AND BASE PLATES

DATE EFFECTIVE:	12-01-2008	903.12Y	SHEET NO. 3 OF 7
DATE PREPARED:	7/19/2012		

IF A SEAL IS PRESENT ON THIS SHEET IT HAS BEEN ELECTRONICALLY SEALED AND DATED.

DRILLED SHAFT OPTION

POST TYPE	PIPE COLUMN O.D.	PIPE COLUMN WEIGHT (LBS.)	"E"	SPLIT	BASE PLATE SIZE**	ANCHOR BOLT NO.	ANCHOR BOLT DIA.	C	FA	FB	FC	FD	FH	COLLAR REINFORCEMENT MOMENT-C1 BARS	MOMENT-C1 SPACING	SHEAR-C2 BARS	SHEAR-C2 SPACING	SKIN-C3 BARS	SKIN-C3 SPACING	SHAFT REINFORCEMENT LONGITUDINAL S1 QUANTITY	LONGITUDINAL S1 BARS	SHEAR-S2 BARS	SHEAR-S2 SPACING	REBAR TOTAL (LBS.)	CONCRETE (CU.YDS.)
III	18"	93.45	8½"	0"	2'-8" x 2'-8" x 1¾"	10	2"	2'-10"	4'-0"	7'-6"	1'-6"	4'-6"	14'-0"	#6	6"	#4	12"	#4	12"	19	#10	#5	6"	2126	12.4
IV	20"	104.13	8½"	0"	2'-10" x 2'-10" x 2"	10	2¼"	3'-0"	4'-0"	7'-6"	1'-6"	4'-6"	14'-0"	#6	6"	#4	12"	#4	12"	19	#10	#5	6"	2126	12.4
V	18"	93.45	8½"	7"	3'-3" x 2'-8" x 2"	10	2¼"	2'-10"	5'-0"	13'-6"	4'-0"	5'-6"	17'-0"	#6	6"	#4	12"	#4	12"	22	#11	#6	6"	3901	26.5
VI	20"	104.13	8½"	8"	3'-6' x 2'-10" x 2¼"	10	2¼"	3'-0"	5'-0"	14'-0"	4'-0"	6'-0"	18'-0"	#6	6"	#4	12"	#4	12"	27	#11	#6	6"	4742	31.8
VII	24"	125.49	9"	8"	3'-10" x 3'-2" x 2¼"	10	2½"	3'-4"	5'-0"	14'-0"	4'-0"	6'-0"	18'-0"	#6	6"	#4	12"	#4	12"	27	#11	#6	6"	4742	31.8

ALTERNATE PEDESTALS

POST TYPE	REBAR TOTAL (LBS.) TYPE A	REBAR TOTAL (LBS.) TYPE C	CONCRETE (CU.YDS.) TYPE A	CONCRETE (CU.YDS.) TYPE C
III	2066	2077	13.4	14.5
IV	2066	2077	13.5	14.6
V	3763	3782	28.8	30.7
VI	4528	4547	34.1	36.2
VII	4528	4547	34.5	36.8

SPREAD FOOTING OPTION

POST TYPE	PIPE COLUMN O.D.	PIPE COLUMN WEIGHT (LBS.)	"E"	SPLIT	BASE PLATE SIZE**	ANCHOR BOLT NO.	ANCHOR BOLT DIA.	PEDESTAL SIZE * a	PEDESTAL SIZE * b	FOOTING SIZE *	LONGITUDINAL FOOTING REINFORCEMENT TOP NO.	TOP BARS	BOTTOM NO.	BOTTOM BARS	PEDESTAL REINFORCEMENT NO.	PEDESTAL REINFORCEMENT BARS	NO.	BARS	REBAR TOTAL (LBS.)	CONCRETE (CU.YDS.)
III	18"	93.45	8½"	0"	2'-8" x 2'-8" x 1¾"	10	2"	4'-2"	3'-8"	10'-0" x 13'-0"	10	#5	10	#5	10	#4	14	#8	695	14.4
IV	20"	104.13	8½"	0"	2'-10" x 2'-10" x 2"	10	2¼"	4'-4"	3'-10"	10'-0' x 14'-0"	10	#5	10	#5	10	#4	14	#8	733	15.6
V	18"	93.45	8½"	7"	3'-3" x 2'-8" x 2"	10	2¼"	4'-9"	3'-8"	9'-0" x 17'-0"	9	#5	10	#7	10	#4	14	#8	955	16.5
VI	20"	104.13	8½"	8"	3'-6' x 2'-10" x 2¼"	10	2¼"	5'-0"	3'-10"	9'-0" x 19'-0"	9	#5	10	#7	10	#4	14	#8	1028	18.4
VII	24"	125.49	9"	8"	3'-10" x 3'-2" x 2¼"	10	2½"	5'-4"	4'-2"	10'-0" x 20'-0"	9	#5	12	#7	10	#4	14	#8	1196	21.5

SPREAD FOOTING OPTION WITH ALTERNATE PEDESTALS

POST TYPE	PIPE COLUMN O.D.	PIPE COLUMN WEIGHT (LBS.)	"E"	SPLIT	BASE PLATE SIZE**	ANCHOR BOLT NO.	ANCHOR BOLT DIA.	PEDESTAL SIZE * c	PEDESTAL SIZE * d	PEDESTAL SIZE * e	FOOTING SIZE *	TYPE A LONGITUDINAL FOOTING REINFORCEMENT TOP NO.	TOP BARS	BOTTOM NO.	BOTTOM BARS	TYPE A PEDESTAL REINFORCEMENT NO.	BARS	NO.	BARS	TYPE A REBAR TOTAL (LBS.)	TYPE A CONCRETE (CU.YDS.)	TYPE C LONGITUDINAL FOOTING REINFORCEMENT TOP NO.	TOP BARS	BOTTOM NO.	BOTTOM BARS	TYPE C PEDESTAL REINFORCEMENT NO.	BARS	NO.	BARS	TYPE C REBAR TOTAL (LBS.)	TYPE C CONCRETE (CU.YDS.)
III	18"	93.45	8½"	0"	2'-8" x 2'-8" x 1¾"	10	2"	2'-10"	6'-6"	15"	10'-0" x 13'-0"	10	#5	10	#5	10	#4	14	#8	757	14.4	10	#4	10	#5	12	#4	14	#8	800	15.3
IV	20"	104.13	8½"	0"	2'-10" x 2'-10" x 2"	10	2¼"	3'-0"	6'-9"	18"	10'-0' x 14'-0"	10	#5	10	#5	10	#4	14	#8	795	15.6	10	#4	10	#5	12	#4	14	#8	839	16.5
V	18"	93.45	8½"	7"	3'-3" x 2'-8" x 2"	10	2¼"	2'-10"	7'-0"	12"	9'-0" x 17'-0"	9	#5	10	#7	10	#4	14	#8	1015	16.5	10	#4	10	#7	12	#4	14	#8	1059	17.5
VI	20"	104.13	8½"	8"	3'-6' x 2'-10" x 2¼"	10	2¼"	3'-0"	7'-6"	15"	9'-0" x 19'-0"	9	#5	10	#7	10	#4	14	#8	1099	18.4	10	#4	10	#7	12	#4	14	#8	1134	19.5
VII	24"	125.49	9"	8"	3'-10" x 3'-2" x 2¼"	10	2½"	3'-4"	7'-10"	15"	10'-0" x 20'-0"	9	#5	12	#7	10	#4	14	#8	1257	21.5	10	#4	12	#7	12	#4	14	#8	1302	22.6

* BASE PLATES, PEDESTAL AND FOOTINGS, LONGER SIDES SHALL BE NORMAL TO AXIS OF SIGN.
** BASE PLATES, PEDESTAL AND FOUNDATIONS, LONGER SIDES SHALL BE NORMAL TO AXIS OF SIGN.

IF A SEAL IS PRESENT ON THIS SHEET IT HAS BEEN ELECTRONICALLY SEALED AND DATED.

MISSOURI HIGHWAYS AND TRANSPORTATION COMMISSION
105 WEST CAPITOL
JEFFERSON CITY, MO 65102
1-888-ASK-MODOT (1-888-275-6636)

STATE OF MISSOURI
KATHRYN PHILLIPS HARVEY
NUMBER PE-23751
PROFESSIONAL ENGINEER
THIS SHEET HAS BEEN SIGNED, SEALED AND DATED ELECTRONICALLY.

OVERHEAD SIGN TRUSSES
OPTIONAL SUBSTRUCTURE DATA

DATE EFFECTIVE: 12-01-2008
DATE PREPARED: 7/19/2012

903.12Y

SHEET NO. 4 OF 7

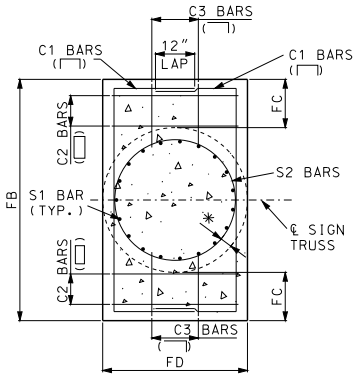

SECTION A-A

(TYPICAL SECTION SHOWING REINFORCING STEEL)

✳ 4" CLEAR FOR FD = 4'-6"
6" CLEAR FOR FD > 4'-6"

VERTICAL LEG OF C3 SHALL BE PLACED INSIDE SHAFT S2 BARS.

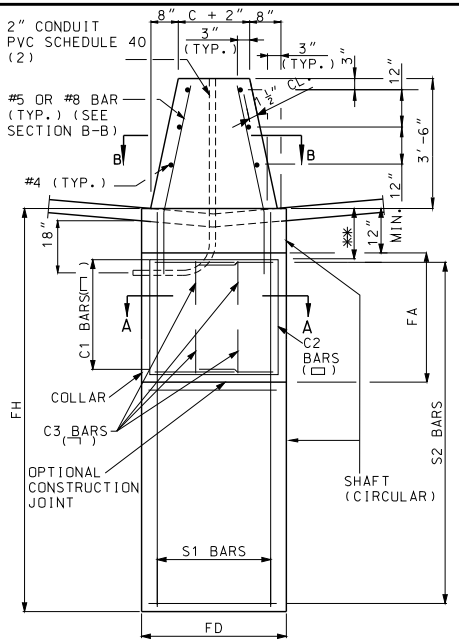

PART ELEVATION

(TYPE C CONCRETE TRAFFIC BARRIER)

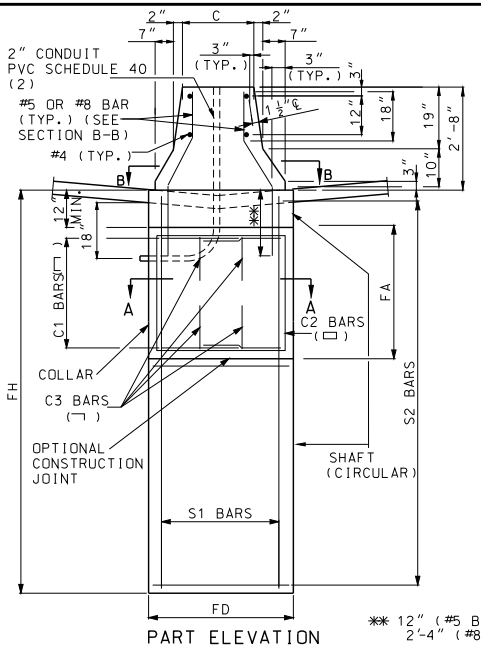

✳✳ 12" (#5 BAR)
2'-4" (#8 BAR)

PART ELEVATION

(TYPE A CONCRETE TRAFFIC BARRIER)

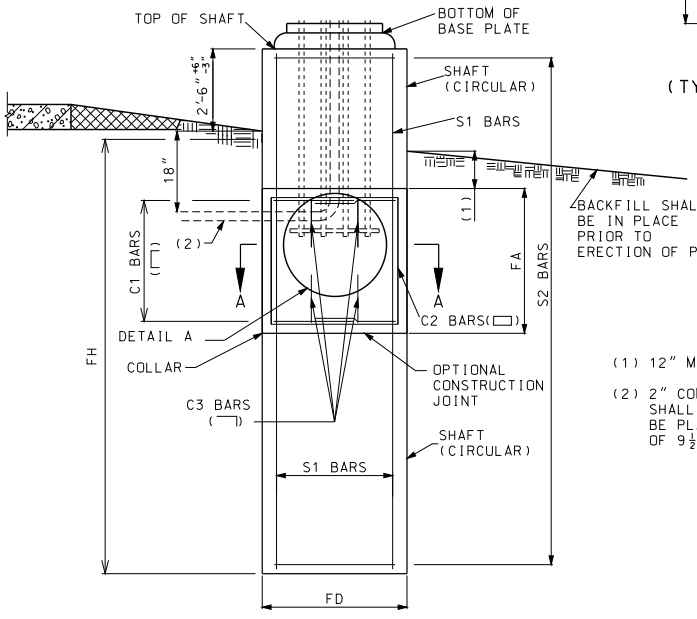

ELEVATION

DETAILS OF ALTERNATE PEDESTAL

(TO BE USED ADJACENT TO TYPE A OR TYPE C MEDIAN BARRIER)

(1) 12" MIN. TO 24" MAX.

(2) 2" CONDUIT IN THE CONCRETE PEDESTAL SHALL BE PVC SCHEDULE 40 AND SHALL BE PLACED WITH A MINIMUM BEND RADIUS OF 9½"

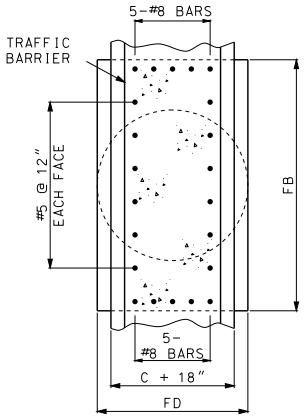

SECTION B-B

GENERAL NOTES:

SHAFT AND COLLAR SHALL BE CLASS B (P.C.C.).

MINIMUM CLEARANCE TO REINFORCEMENT IS 3" EXCEPT AS SHOWN.

WHEN ROCK IS ENCOUNTERED AT A DEPTH NOT EXCEEDING "FH"/2 FOR FD > 3'-0" OR "FH"/4 FOR FD ≤ 3'-0", THE DIMENSION "FH" MAY BE ADJUSTED TO A MINIMUM OF 3 X "FD". SUBJECT TO APPROVAL BY THE ENGINEER.

CONTACT THE ENGINEER IF WATER TABLE IS ENCOUNTERED DURING EXCAVATION.

PIPE COLUMN, BASE PLATE, ANCHOR BOLTS AND NOTES PERTAINING TO THESE ITEMS HAVE BEEN OMITTED FOR CLARITY. REFER TO SHEET 3 OF 7 FOR DETAILS OF THESE ITEMS.

MISSOURI HIGHWAYS AND TRANSPORTATION COMMISSION
105 WEST CAPITOL
JEFFERSON CITY, MO 65102
1-888-ASK-MODOT (1-888-275-6636)

STATE OF MISSOURI
KATHRYN PHILLIPS HARVEY
NUMBER PE-2007051
PROFESSIONAL ENGINEER
THIS SHEET HAS BEEN SIGNED, SEALED AND DATED ELECTRONICALLY.

OVERHEAD SIGN TRUSSES
DRILLED SHAFT OPTION

DATE EFFECTIVE: 12-01-2008
DATE PREPARED: 7/19/2012

903.12Y

SHEET NO. 5 OF 7

IF A SEAL IS PRESENT ON THIS SHEET IT HAS BEEN ELECTRONICALLY SEALED AND DATED.

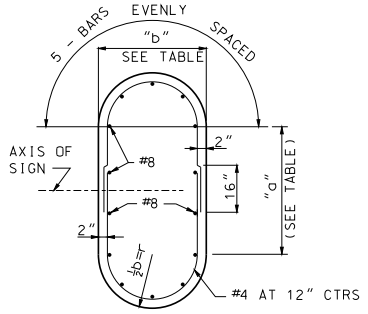

SECTION A-A
(TYPICAL SECTION SHOWING REINFORCING STEEL)

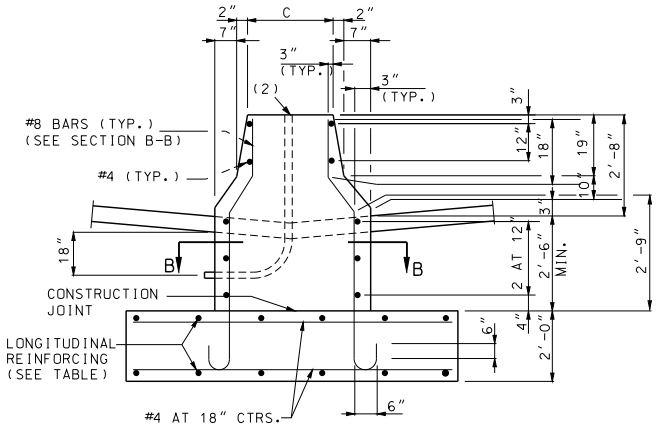

PART ELEVATION
(TYPE A CONCRETE TRAFFIC BARRIER)

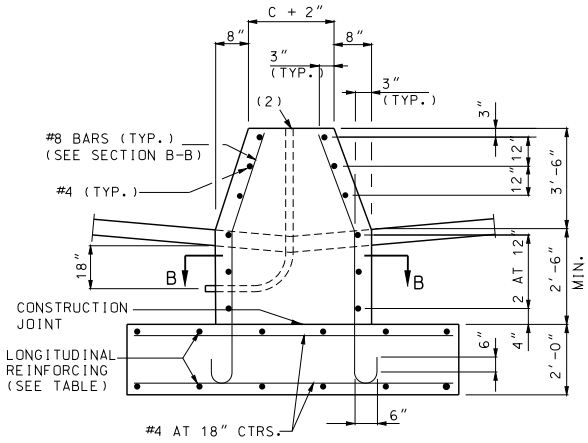

PART ELEVATION
(TYPE C CONCRETE TRAFFIC BARRIER)

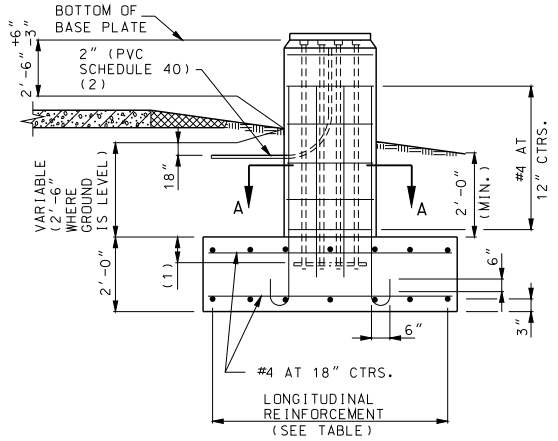

ELEVATION

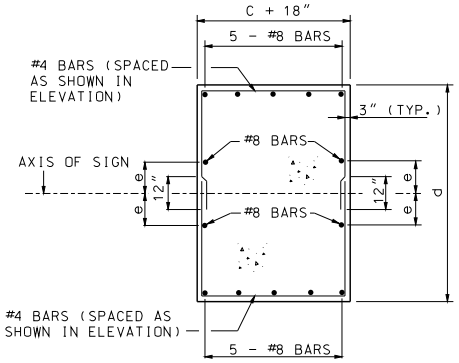

SECTION B-B
TYPICAL SECTION SHOWING
REINFORCING STEEL

DETAILS OF ALTERNATE PEDESTAL

(1) $12"^{+6"}_{-3"}$ (DETAIL FOR 12" FIELD TOLERANCE)

(2) 2" CONDUIT IN THE CONCRETE PEDESTAL SHALL BE PVC SCHEDULE 40 AND SHALL BE PLACED WITH A MINUMUM BEND RADIUS OF $9\frac{1}{2}$".

GENERAL NOTES:

PEDESTAL AND FOOTING SHALL BE CLASS B (P.C.C.).

MINIMUM CLEARANCE TO REINFORCEMENT IS 3" EXCEPT AS SHOWN.

CONTACT THE ENGINEER IF WATER TABLE IS ENCOUNTERED DURING EXCAVATION.

PIPE COLUMN, BASE PLATE, ANCHOR BOLTS AND NOTES PETAINING TO THESE ITEMS HAVE BEEN OMITTED FOR CLARITY. REFER TO SHEET 3 OF 7 FOR DETAILS OF THESE ITEMS.

IF A SEAL IS PRESENT ON THIS SHEET IT HAS BEEN ELECTRONICALLY SEALED AND DATED.

MISSOURI HIGHWAYS AND TRANSPORTATION COMMISSION
105 WEST CAPITOL
JEFFERSON CITY, MO 65102
1-888-ASK-MODOT (1-888-275-6636)

STATE OF MISSOURI
KATHRYN PHILLIPS HARVEY
NUMBER PE-23751
PROFESSIONAL ENGINEER
THIS SHEET HAS BEEN SIGNED, SEALED AND DATED ELECTRONICALLY.

OVERHEAD SIGN TRUSSES
SPREAD FOOTING

DATE EFFECTIVE: 12-01-2008
DATE PREPARED: 7/19/2012

903.12Y

SHEET NO. 6 OF 7

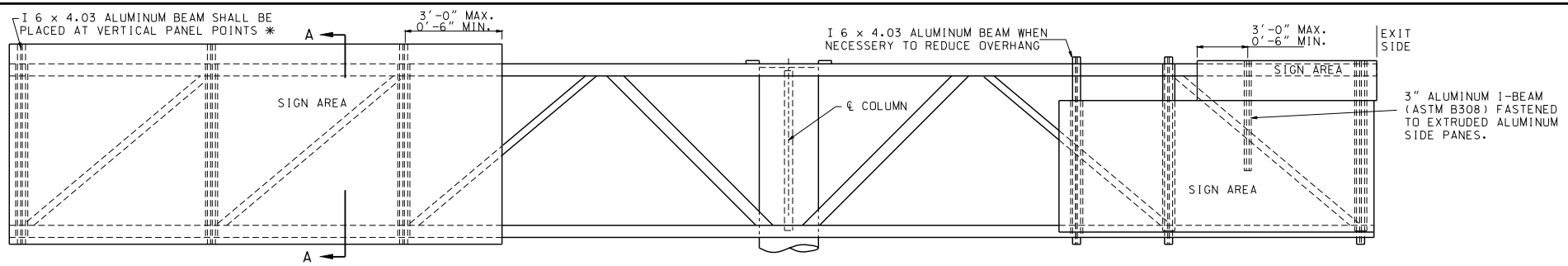

TYPICAL ELEVATION OF SIGNS COMPONENTS

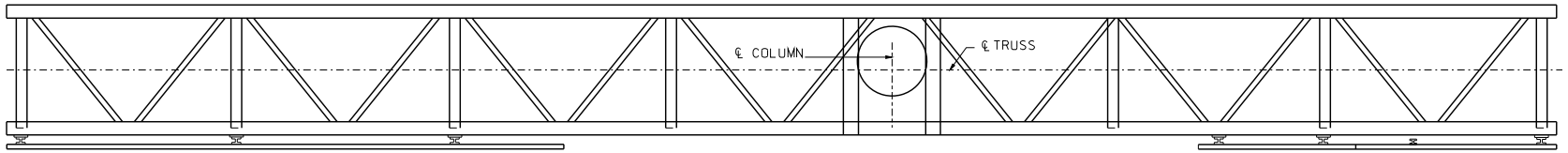

TYPICAL PLAN OF SIGN COMPONENTS

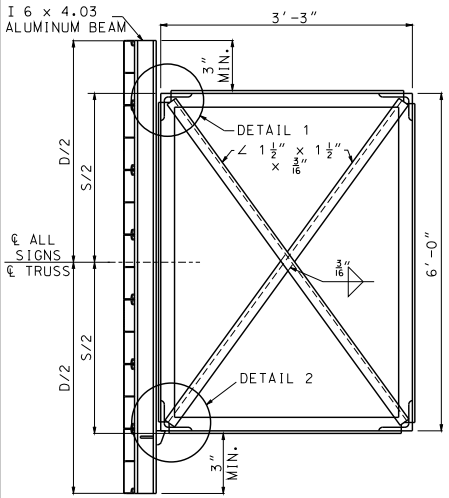

SECTION A-A
TYPICAL SECTION OF SIGN SUPPORT

NOTE:
"D" = GREATEST OVERALL DEPTH OF ANY SIGNS ON TRUSSES.

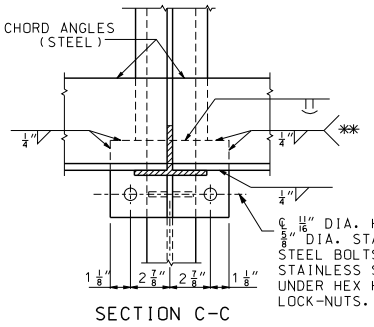

SECTION C-C

3/16" DIA. HOLES IN ALUMINUM FLANGE. 9/16" x 1" SLOT IN 5/8" ℄ FOR ½" DIA. STAINLESS STEEL HEX HEAD BOLTS AND LOCK-NUTS WITH FLAT STAINLESS STEEL WASHERS.

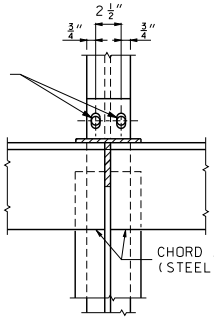

SECTION F-F

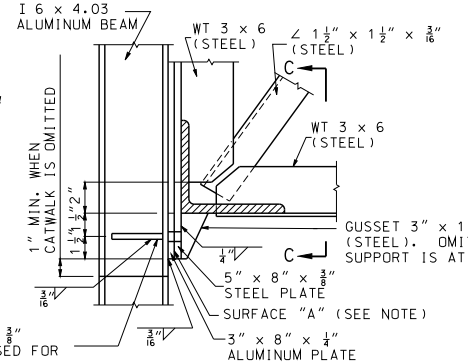

TWO - GUSSETS 5" x 1" x 3/8" (ALUM.) OMIT WHEN NOT USED FOR CATWALK SUPPORT.

DETAIL 2

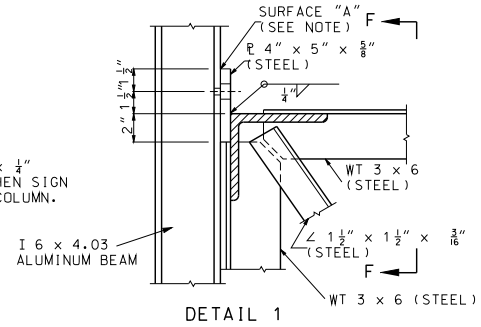

DETAIL 1

NOTE:
SURFACE "A", ZINC CHROMATE ON ALUMINUM SURFACES. NORMAL CLEANING AND PAINTING ON STEEL SURFACES. ZINC CHROMATE IS NOT REQUIRED WHEN STEEL IS GALVANIZED.

* FOR SIGN HEIGHTS GREATER THAN 17'-0", BUT LESS THAN OR EQUAL TO 20'-0" USE ADDITIONAL I 6 x 4.03 ALUMINUM BEAMS TO ACHIEVE A MAXIMUM SPACING OF 4'-0" BETWEEN SIGN SUPPORTS.

** WHEN SIGN SUPPORTS ARE PLACED BETWEEN VERTICAL PANEL POINTS AS ILLUSTRATED IN TYPICAL ELEVATION OF SIGNS COMPONENTS. WELD THE ⅜" STEEL PLATE TO THE BOTTOM CHORD WITH A ¼" FILLET WELD.

GENERAL NOTES:

EXIT NO. PANELS SHALL BE MONTED FLUSH WITH THE EXIT SIDE OF THE GUIDE SIGN.

ALL SIGNS SHALL BE CENTERED VERTICALLY ABOUT THE HORIZONTAL ℄ OF THE TRUSS.

SEE STANDARD PLAN 903.03 FOR SIGN MOUNTING DETAILS.

MISSOURI HIGHWAYS AND TRANSPORTATION COMMISSION
105 WEST CAPITOL
JEFFERSON CITY, MO 65102
1-888-ASK-MODOT (1-888-275-6636)

STATE OF MISSOURI
KATHRYN PHILLIPS HARVEY
NUMBER PE-23751
PROFESSIONAL ENGINEER
THIS SHEET HAS BEEN SIGNED, SEALED AND DATED ELECTRONICALLY.

OVERHEAD SIGN TRUSSES
STRUCTURAL STEEL
BUTTERFLY AND CANTILEVER

DATE EFFECTIVE: 12-01-2008
DATE PREPARED: 7/19/2012

903.12Y

SHEET NO. 7 OF 7

IF A SEAL IS PRESENT ON THIS SHEET IT HAS BEEN ELECTRONICALLY SEALED AND DATED.

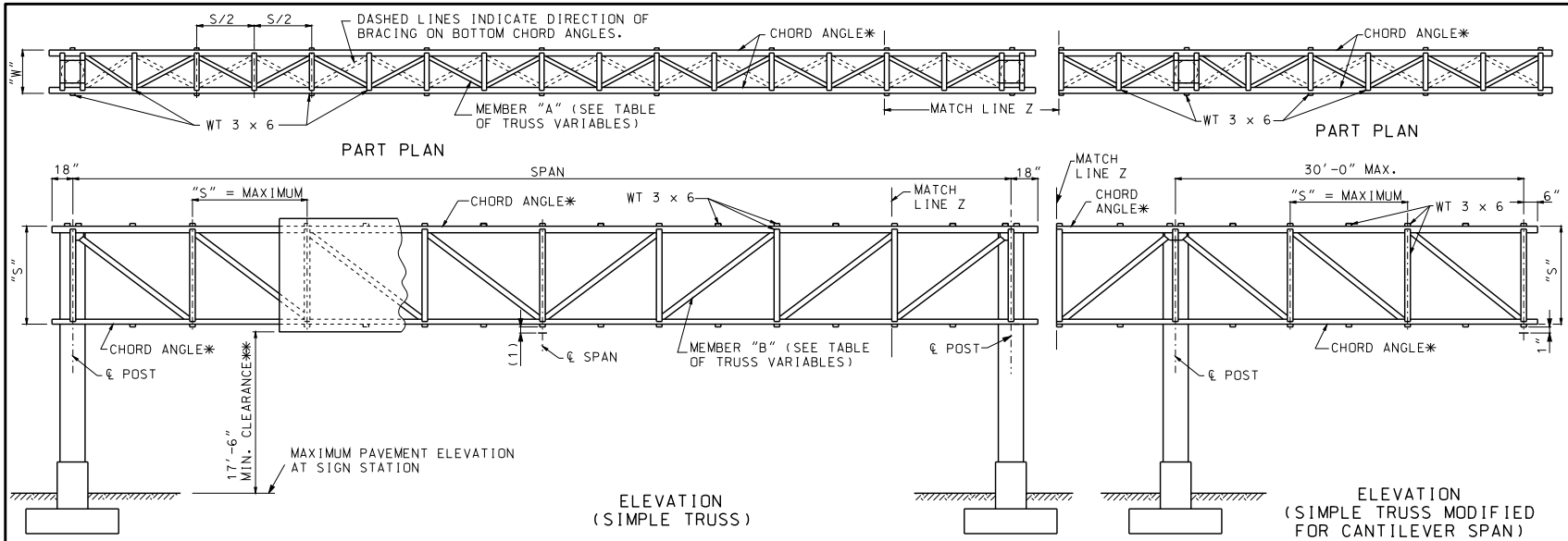

NOTES:

SHOP SPLICES ON CHORD ANGLES WILL BE ALLOWED ONLY BY SPECIAL PERMISSION. IF PERMISSION IS GRANTED, SUCH SPLICES MUST BE LOCATED AT THE CENTERLINE OF MAIN PANEL POINTS.

"D" = GREATEST OVERALL DEPTH OF ANY SIGN OR SIGNS ON TRUSS AND
"S" = TRUSS DEPTH, AND
"W" = TRUSS WIDTH.

¾" DIA. BOLTS SHALL BE REMOVED AFTER WELDING IS COMPLETE. BOLT HOLES SHALL BE PLUGGED AND THE OUTSIDE FACE GROUND SMOOTH.

* SEE GENERAL NOTES THIS SHEET FOR CHARPY V-NOTCH REQUIREMENTS.

** IF LIGHTING IS SPECIFIED, VERTICAL CLEARANCE IS MEASURED TO LOWEST POINT OF LIGHTING BRACKET.

(1) FOR PARABOLIC CAMBER SEE TABLE OF TRUSS VARIABLES

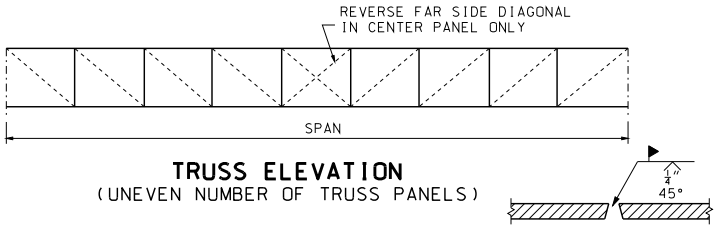

TRUSS ELEVATION
(UNEVEN NUMBER OF TRUSS PANELS)

SECTION A-A

TRUSS VARIABLES					
SPAN	"S"	"W"	MEMBER "A"	MEMBER "B"	SHOP CAMBER
UP TO 80'-6"	6'-0"	4'-0"	L 2½" x 2½" x ¼"	L 2½" x 2½" x ¼"	2"
81' TO 100'-6"	6'-0"	5'-0"	L 3" x 3" x ¼"	L 2½" x 2½" x ¼"	2½"
101' TO 130'-6"	7'-0"	6'-0"	L 3" x 3" x ¼"	L 3" x 3" x ¼"	3½"
131' TO 150'-6"	8'-0"	6'-0"	L 3½" x 3½" x 5/16"	L 3½" x 3½" x 5/16"	4½"
151' TO 160'-6"	8'-0"	7'-0"	L 3½" x 3½" x 5/16"	L 3½" x 3½" x 5/16"	5½"

NOTE: FOR SIZE OF CHORD MEMBERS SEE DATA SHEET.

GENERAL NOTES:

ALL STRUCTURAL STEEL AND COLUMN BASE PLATES ASTM A36, EXCEPT THAT CHORD ANGLES GREATER THAN ½" IN THICKNESS SHALL BE AASHTO M183 WITH SUPPLEMENTAL REQUIREMENTS: S5, CHARPY V-NOTCH IMPACT TEST FOR TEMPERATURE ZONE 2.

ALL ANCHOR BLOTS ASTM A370.

PROPOSED FIELD SPLICES SHALL BE SHOWN ON SHOP DRAWINGS FOR APPROVAL OF THE ENGINEER.

TRUSSES SHALL BE FABRICATED WITH A MINIMUM OF SPLICING IN TRUSS CHORDS. FIELD SPLICING WILL NOT BE PERMITTED WITHIN THE MIDDLE ONE-THIRD OF SPAN.

FOR ADDITIONAL INFORMATION SEE DATA SHEET.

ZINC CHROMATE PRIMER SHALL MEET THE REQUIREMENTS OF FEDERAL SPECIFICATIONS TT-P-645 OR TT-P-1757 AND SHALL BE ACCEPTED ON THE BASIS OF THE LABEL SHOWING CONFORMANCE OR A MANUFACTURER'S CERTIFICATION.

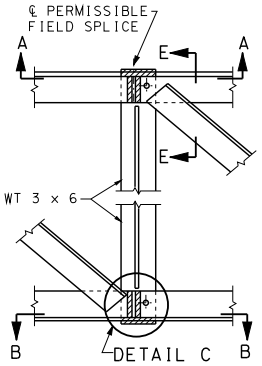

SECTION THROUGH TRUSS LOCATING SPLICES

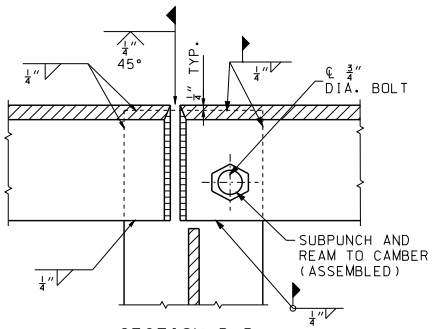

SECTION B-B

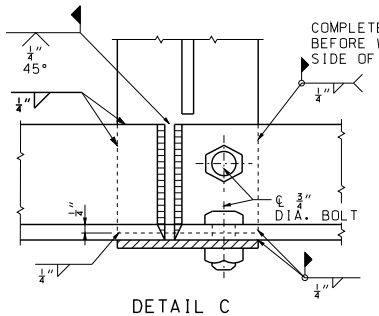

DETAIL C

DETAIL OF FIELD SPLICES
(IF ANY)

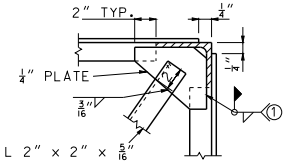

SECTION E-E
(FIELD SPLICE ONLY)

① SEE SHEET 2

MISSOURI HIGHWAYS AND TRANSPORTATION COMMISSION
105 WEST CAPITOL
JEFFERSON CITY, MO 65102
1-888-ASK-MODOT (1-888-275-6636)

STATE OF MISSOURI
KATHRYN PHILLIPS HARVEY
NUMBER PE-23751
PROFESSIONAL ENGINEER
THIS SHEET HAS BEEN SIGNED, SEALED AND DATED ELECTRONICALLY.

OVERHEAD SIGN TRUSSES

STRUCTURAL STEEL

DATE EFFECTIVE: 10/01/2011
DATE PREPARED: 9/30/2011

903.60AA

SHEET NO. 1 OF 5

IF A SEAL IS PRESENT ON THIS SHEET IT HAS BEEN ELECTRONICALLY SEALED AND DATED.

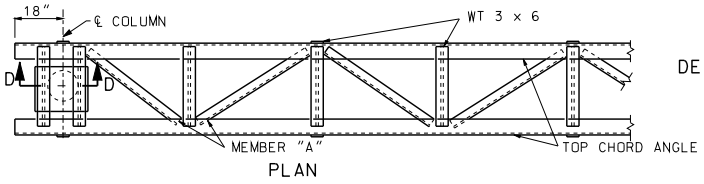

PLAN

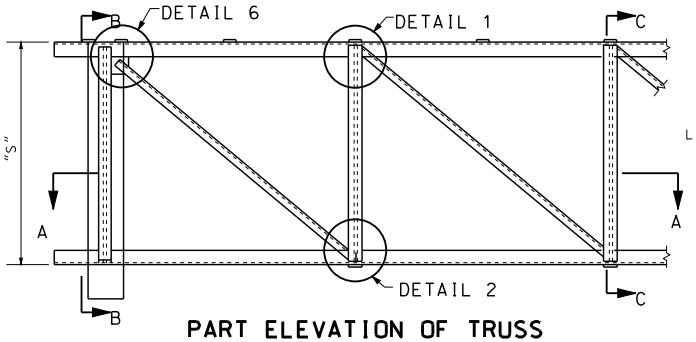

PART ELEVATION OF TRUSS

NOTE: FOR SIZE OF MEMBER "A" SEE TABLE OF TRUSS VARIABLES, SHEET NO 1.

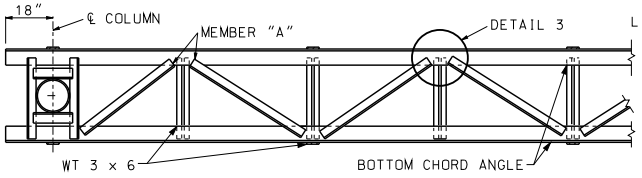

SECTION A-A

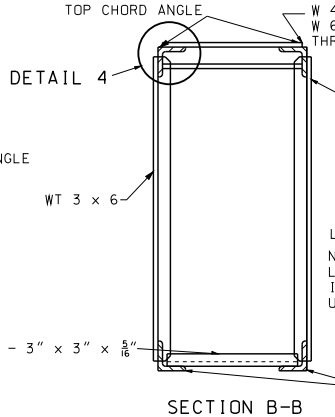

SECTION B-B

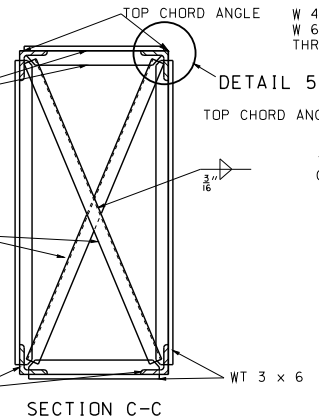

SECTION C-C

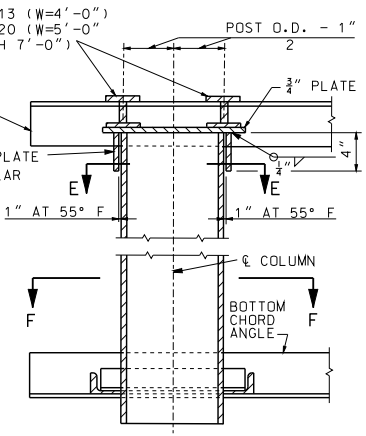

SECTION D-D

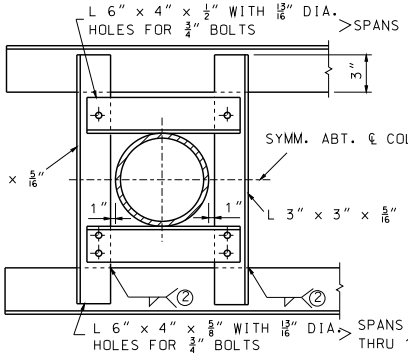

NOTE: BOLTS SHALL BE HIGH STRENGTH STEEL WITH HARDENED WASHERS UNDER HEAD AND NUT.

SECTION F-F

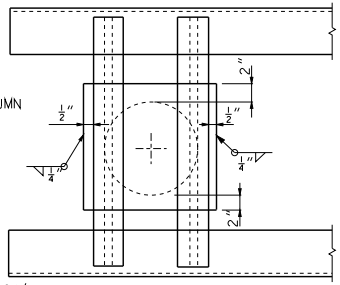

PLAN OF POST

NOTE: FILLET WELD 2 (SHOP OR FIELD) SHALL BE 3/16" WHEN "t" IS 1/2" OR LESS AND 1/4" WHEN "t" IS GREATER THAN 1/2".

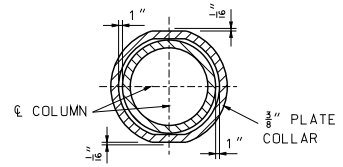

SECTION E-E

NOTE: DETAILS OF CANTILEVER END SECTION ARE SIMILAR TO THOSE SHOWN ON THIS SHEET.

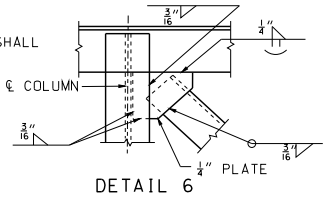

DETAIL 6

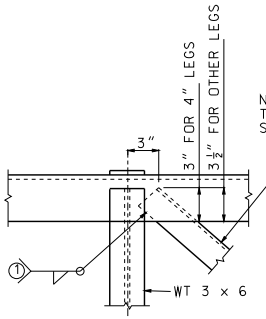

DETAIL 1

NOTE: FOR SIZE OF MEMBER "B" SEE TABLE OF TRUSS VARIABLES, SHEET NO. 1.

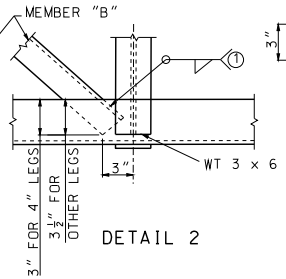

DETAIL 2

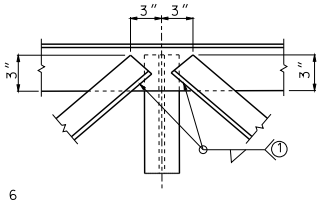

DETAIL 3

TYPICAL FOR ALL PANEL POINT FRAMING EXCEPT AT FIELD SPLICES, IF ANY, AND COLUMN SUPPORTS.

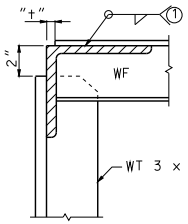

DETAIL 4

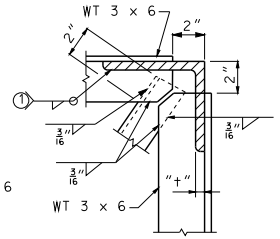

DETAIL 5

SLOT WEB OF STRUCTURAL TEE'S AND WIDE FLANGES TO RECEIVE LEG OF CHORD ANGLES (TYPICAL).

FILLET WELD 1 SHALL BE 5/16" WHEN "t" IS 1/2" OR LESS AND 1/4" WHEN "t" IS GREATER THAN 1/2".

IF DESIRED THE OUTSTANDING LEGS OF DIAGONAL ANGLES MAY BE CLIPPED AT 45° TO FACILITATE ASSEMBLY AND WELDING.

MISSOURI HIGHWAYS AND TRANSPORTATION COMMISSION
105 WEST CAPITOL
JEFFERSON CITY, MO 65102
1-888-ASK-MODOT (1-888-275-6636)

STATE OF MISSOURI
KATHRYN PHILLIPS HARVEY
NUMBER PE-23751
PROFESSIONAL ENGINEER
THIS SHEET HAS BEEN SIGNED, SEALED AND DATED ELECTRONICALLY.

OVERHEAD SIGN TRUSSES

STRUCTURAL STEEL

DATE EFFECTIVE: 10/01/2011
DATE PREPARED: 9/30/2011

903.60AA

SHEET NO. 2 OF 5

IF A SEAL IS PRESENT ON THIS SHEET IT HAS BEEN ELECTRONICALLY SEALED AND DATED.

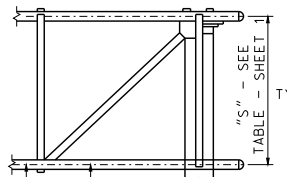

SECTION B-B

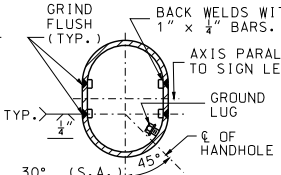

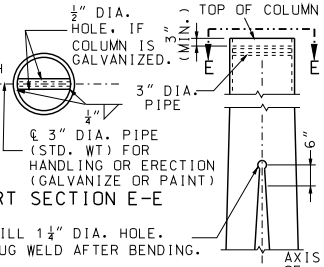

PART SECTION E-E

POST TYPE	PIPE COLUMN	DIMENSION "E"	SPLIT	BASE PLATE SIZE*	ANCHOR BOLTS DIA.	PEDESTAL SIZE* a	PEDESTAL SIZE* b	FOOTING SIZE*	LONGITUDINAL FOOTING REINFORCEMENT TOP	LONGITUDINAL FOOTING REINFORCEMENT BOTTOM	CONCRETE C.Y.
I	12" STD. AT 65.42	8½"	6"	2'-6"x 23"x 1½"	6 AT 2¼"	4'-0"	2'-11"	7'-0"x 14'-6"	7-#5 BARS	7-#6 BARS	10.9
II	14" O.D. AT 72.09	8½"	9½"	3'-0"x 2'-0"x 1½"	6 AT 2¼"	4'-4"	3'-0"	8'-0"x 16'-0"	8-#5 BARS	9-#6 BARS	13.2
III	16" O.D. AT 82.77	8¾"	11½"	3'-4"x 2'-2"x 1¾"	6 AT 2¼"	4'-8"	3'-2"	8'-6"x 17'-6"	9-#5 BARS	9-#7 BARS	15.2
IV	18" O.D. AT 93.45	9½"	12½"	3'-7"x 2'-4"x 2"	6 AT 2½"	5'-1"	3'-4"	9'-6"x 19'-0"	10-#5 BARS	10-#8 BARS	18.1
V	20" O.D. AT 104.13	9½"	13"	3'-10"x 2'-9"x 2"	8 AT 2½"	5'-4"	3'-9"	10'-0"x 20'-0"	10-#5 BARS	10-#8 BARS	20.6
VI	24" O.D. AT 125.49	9½"	10½"	4'-0"x 3'-3"x 2"	8 AT 2½"	5'-6"	4'-3"	10'-6"x 21'-0"	11-#5 BARS	11-#8 BARS	23.3
VII	24" O.D. AT 125.49	9½"	13½"	4'-3"x 3'-3"x 2"	8 AT 2½"	5'-9"	4'-3"	11'-0"x 22'-0"	11-#5 BARS	11-#9 BARS	25.1

* BASE PLATES, PEDESTAL, AND FOOTINGS, LONGER SIDES SHALL BE NORMAL TO AXIS OF SIGN.

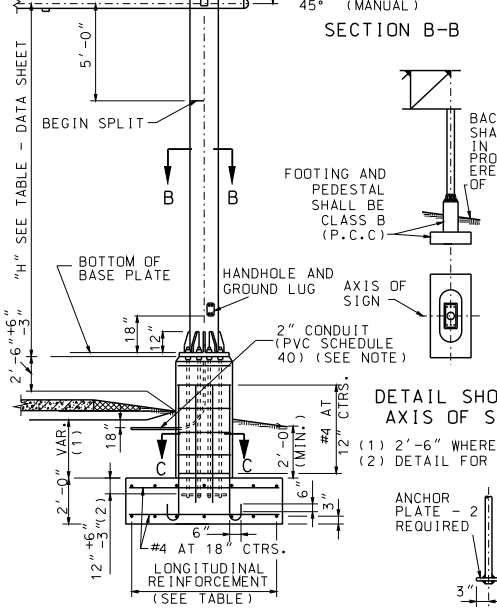

DETAIL SHOWING AXIS OF SIGN

(1) 2'-6" WHERE GROUND IS LEVEL
(2) DETAIL FOR 12" FIELD TOLERANCE.

NOTE: THE 2" CONDUIT IN THE CONCRETE PEDESTAL SHALL BE PVC SCHEDULE 40 AND SHALL BE PLACED WITH A MINUMUM RADIUS BEND OF 9½".

ELEVATION

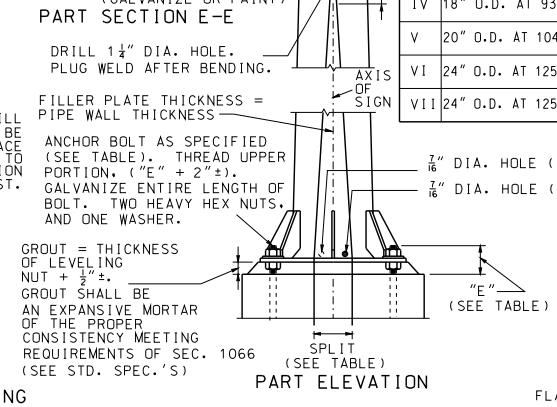

PART ELEVATION

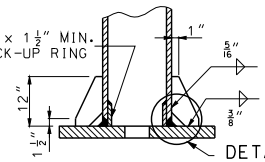

DETAIL X

PART SECTION A-A

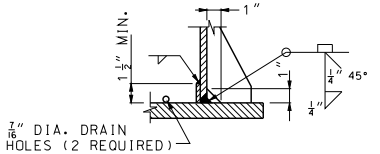

DETAIL X

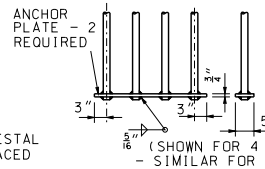

(SHOWN FOR 4 BOLTS - SIMILAR FOR 3 BOLTS)

ANCHORAGE DETAIL A

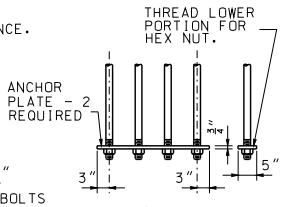

(SHOWN FOR 4 BOLTS - SIMILAR FOR 3 BOLTS)

ANCHORAGE DETAIL B (OPTIONAL)

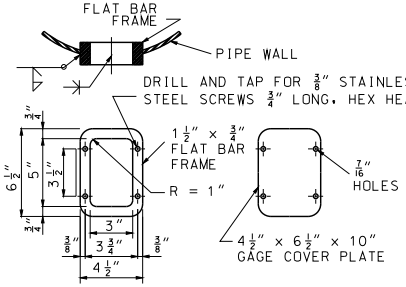

HANDHOLE AND COVER DETAILS

NOTE: HANDHOLE REQUIRED ONLY IN POWER COLUMN.

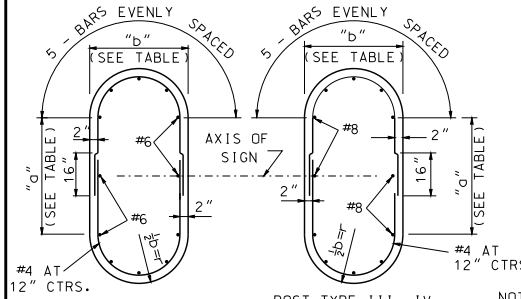

SECTION C-C
(TYPICAL SECTION SHOWING REINFORCING STEEL)

NOTE: FOR DETAILS OF ALTERNATE PEDESTAL, SEE SHEET NO. 4 OF 5.

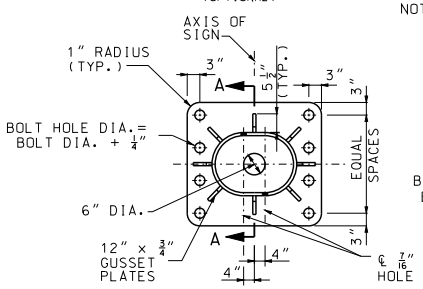

8 ANCHOR TYPE

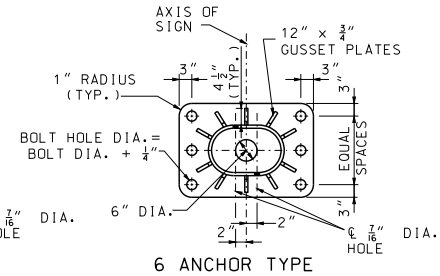

6 ANCHOR TYPE

TYPICAL BASE PLATES

GENERAL NOTES:
A TAPERED TUBE OF EQUIVALENT SIZE AND THICKNESS MAY BE SUBSTITUTED FOR PIPE POST.

ALL STEEL PIPE COLUMNS SHALL BE EITHER GRADE "B" SEAMLESS STEEEL PIPE OR GRADE "B" ELECTRIC RESISTANCE WELDED STEEL PIPE: A.S.T.M. SPECIFICATION A53. NO OBJECTIONABLE SEAMS WILL BE PERMITTED.

ALL STRUCTURES SHALL BE GROUNDED.

BURR THREADS ON ALL ANCHOR BOLTS.

A HORIZONTAL WELDED SPLICE MAY BE FABRICATED IN THE COLUMN BETWEEN THE TOP OF PIPE AND 4'- 0" BELOW THE BOTTOM CHORDS OF THE TRUSS WHEN DETAILED ON THE SHOP DRAWINGS AND APPROVED BY THE ENGINEER.

GROUND LUGS SHALL BE LOCATED INSIDE COLUMN NEAR HAND HOLE.

QUANTITIES FOR PEDESTAL, BASED ON NOMINAL HEIGHT OF 5'- 0".

QUANTITIES FOR FOOTING, BASED ON NOMINAL DEPTH OF 2'- 0".

QUANTITIES SHOWN ARE FOR ONE COLUMN ONLY.

IF A SEAL IS PRESENT ON THIS SHEET IT HAS BEEN ELECTRONICALLY SEALED AND DATED.

MISSOURI HIGHWAYS AND TRANSPORTATION COMMISSION
105 WEST CAPITOL
JEFFERSON CITY, MO 65102
1-888-ASK-MODOT (1-888-275-6636)

STATE OF MISSOURI KATHRYN PHILLIPS HARVEY NUMBER PE-23751 PROFESSIONAL ENGINEER
THIS SHEET HAS BEEN SIGNED, SEALED AND DATED ELECTRONICALLY.

OVERHEAD SIGN TRUSSES

STRUCTURAL STEEL

DATE EFFECTIVE: 10/01/2011
DATE PREPARED: 9/30/2011

903.60AA

SHEET NO. 3 OF 5

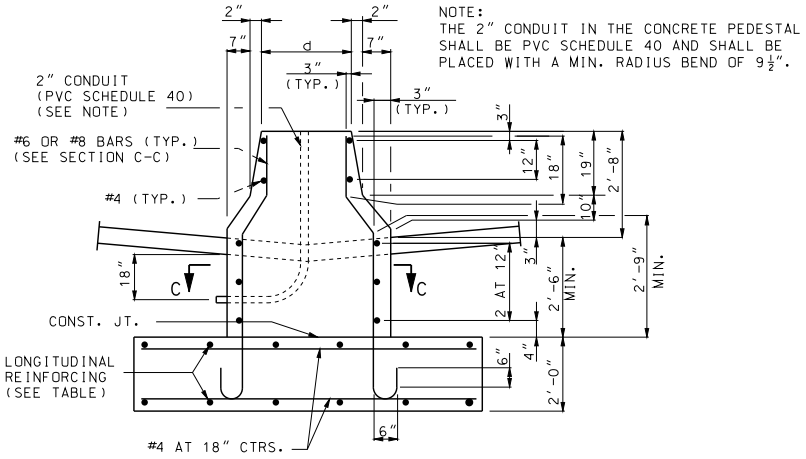

PART ELEVATION
(TYPE A CONCRETE TRAFFIC BARRIER)

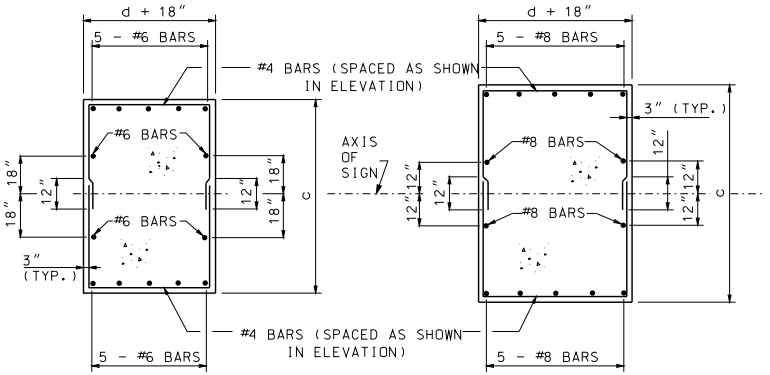

POST TYPE I AND II

POST TYPEIII, IV, V, VI, AND VII

SECTION C-C
TYPICAL SECTION SHOWING
REINFORCING STEEL

NOTE:
THE 2" CONDUIT IN THE CONCRETE PEDESTAL SHALL BE PVC SCHEDULE 40 AND SHALL BE PLACED WITH A MIN. RADIUS BEND OF 9½".

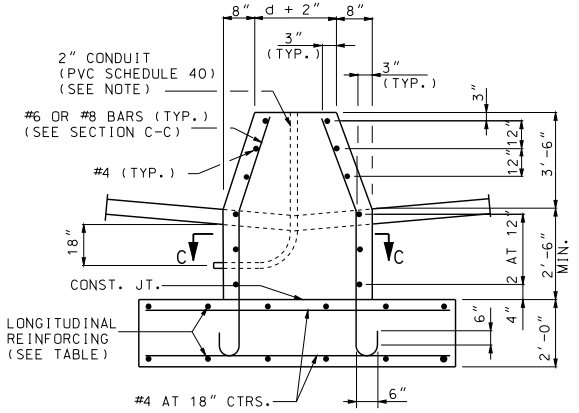

PART ELEVATION
(TYPE C CONCRETE TRAFFIC BARRIER)

POST TYPE	PIPE COLUMN	PEDESTAL SIZE*		FOOTING SIZE*	LONGITUDINAL FOOTING REINFORCEMENT		CONCRETE C.Y.	
		c	d		TOP	BOTTOM	TYPE A MEDIAN BARRIER	TYPE C MEDIAN BARRIER
I	12" STD. AT 65.42	5'-9"	2'-1"	7'-0"x 14'-6"	7-#5 BARS	7-#6 BARS	10.9	11.6
II	14" O.D. AT 72.09	6'-2"	2'-2"	8'-0"x 16'-0"	8-#5 BARS	9-#6 BARS	13.2	14.0
III	16" O.D. AT 82.77	6'-7"	2'-4"	8'-6"x 17'-6"	9-#5 BARS	9-#7 BARS	15.2	16.1
IV	18" O.D. AT 93.45	7'-1"	2'-6"	9'-6"x 19'-0"	10-#5 BARS	10-#8 BARS	18.1	19.1
V	20" O.D. AT 104.13	7'-8"	2'-11"	10'-0"x 20'-0"	10-#5 BARS	10-#8 BARS	20.6	21.7
VI	24" O.D. AT 125.49	8'-3"	3'-5"	10'-6"x 21'-0"	11-#5 BARS	11-#8 BARS	23.3	24.6
VII	24" O.D. AT 125.49	8'-6"	3'-5"	11'-0"x 22'-0"	11-#5 BARS	11-#9 BARS	25.1	26.5

* BASE PLATES, PEDESTAL, AND FOOTINGS LONGER SIDES SHALL BE NORMAL TO AXIS OF SIGN.

GENERAL NOTES:

A TAPERED TUBE OF EQUILVALENT SIZE AND THICKNESS MAY BE SUBSTITUTED FOR PIPE POST.

ALL STEEL PIPE COLUMNS SHALL BE EITHER GRADE "B" SEAMLESS STEEL PIPE OR GRADE "B" ELECTRIC RESISTANCE WELDED STEEL PIPE; A.S.T.M. SPECIFICATION A53.

NO OBJECTIONABLE SEAMS WILL BE PERMITTED.

ALL STRUCTURES SHALL BE GROUNDED.

BURR THREADS ON ALL ANCHOR BOLTS.

PIPE COLUMN, BASE PLATE, ANCHOR BOLTS AND NOTES PERTAINING TO THESE ITEMS HAVE BEEN OMITTED FOR CLARITY. REFER TO SHEET 3 OF 5 FOR DETAILS OF THESE ITEMS.

GROUND LUGS SHALL BE LOCATED INSIDE COLUMN NEAR HAND HOLE.

QUANTITIES FOR PEDESTAL ARE BASED ON NOMINAL HEIGHT OF 5'-2" (TYPE A MEDIAN BARRIER) OR 6'-0" (TYPE C MEDIAN BARRIER).

QUANTITIES FOR FOOTING ARE BASED ON NOMINAL DEPTH OF 2'-0".

QUANTITIES SHOWN ARE FOR ONE COLUMN ONLY.

DETAILS OF ALTERNATE PEDESTAL

(TO BE USED ADJACENT TO TYPE "A" OR "C" MEDIAN BARRIER)

IF A SEAL IS PRESENT ON THIS SHEET IT HAS BEEN ELECTRONICALLY SEALED AND DATED.

MISSOURI HIGHWAYS AND TRANSPORTATION COMMISSION
105 WEST CAPITOL
JEFFERSON CITY, MO 65102
1-888-ASK-MODOT (1-888-275-6636)

STATE OF MISSOURI
KATHRYN PHILLIPS HARVEY
NUMBER PE-23751
PROFESSIONAL ENGINEER
THIS SHEET HAS BEEN SIGNED, SEALED AND DATED ELECTRONICALLY.

OVERHEAD SIGN TRUSSES

STRUCTURAL STEEL

DATE EFFECTIVE: 10/01/2011
DATE PREPARED: 9/30/2011

903.60AA

TYPICAL HALF PLAN OF SIGN COMPONENTS

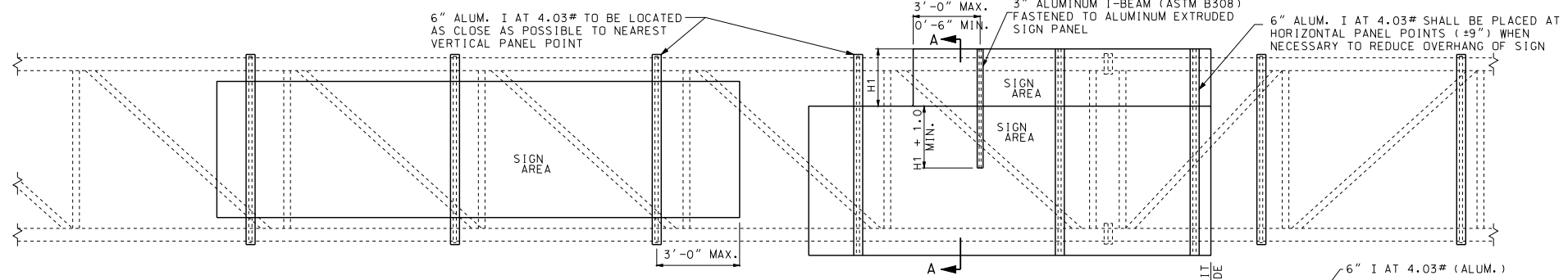

TYPICAL ELEVATION OF SIGN COMPONENTS

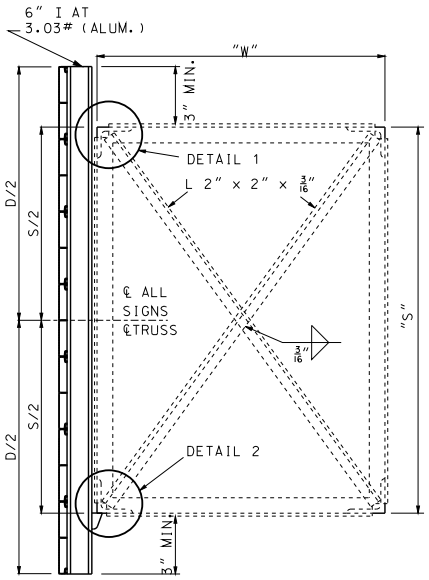

SECTION A-A

TYPICAL SECTION OF SIGN SUPPORT

NOTE: "D" = GREATEST OVERALL DEPTH OF ANY SIGN OR SIGNS ON TRUSSES AND "S"= TRUSS DEPTH. SEE SHEET NO. 5 OF 7 FOR LOCATION OF SECTION A-A.

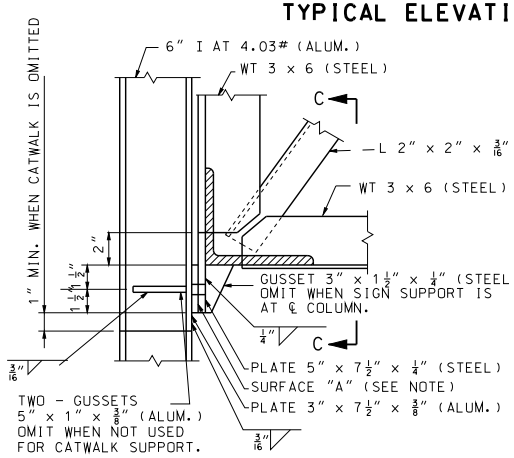

DETAIL 2

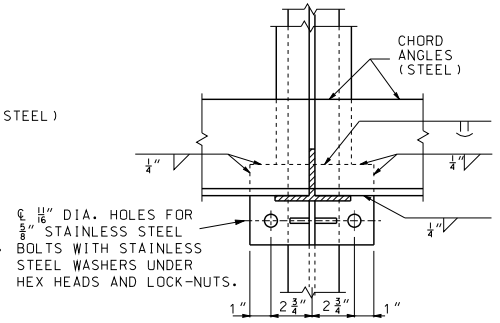

SECTION C-C

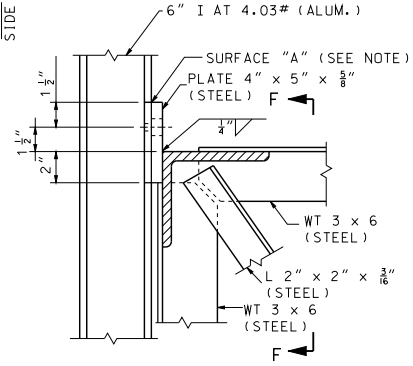

DETAIL 1

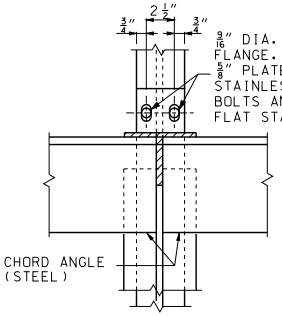

SECTION F-F

NOTE:
SURFACE "A", ZINC CHROMATE ON ALUMINUM SURFACES. NORMAL CLEANING AND PAINTING ON STEEL SURFACES. ZINC CHROMATE IS NOT REQUIRED WHEN STEEL IS GALVANIZED.

GENERAL NOTES:

EXIT NO. PANELS SHALL BE MOUNTED FLUSH WITH THE EXIT SIDE OF THE GUIDE SIGN.

ALL SIGNS SHALL BE CENTEREDVERTICALLY ABOUT THE HORIZONTAL ℄ OF THE TRUSS.

MISSOURI HIGHWAYS AND TRANSPORTATION COMMISSION
105 WEST CAPITOL
JEFFERSON CITY, MO 65102
1-888-ASK-MODOT (1-888-275-6636)

STATE OF MISSOURI
KATHRYN PHILLIPS HARVEY
NUMBER PE-23751
PROFESSIONAL ENGINEER
THIS SHEET HAS BEEN SIGNED, SEALED AND DATED ELECTRONICALLY.

OVERHEAD SIGN TRUSSES

STRUCTURAL STEEL

DATE EFFECTIVE:	10/01/2011	903.60AA	SHEET NO. 5 OF 5
DATE PREPARED:	9/30/2011		

IF A SEAL IS PRESENT ON THIS SHEET IT HAS BEEN ELECTRONICALLY SEALED AND DATED.