CALLAWAY COUNTY ROUTE 94
EAGLE CREEK
CONSTRUCTION STARTS JULY 2012

EXISTING BRIDGE

PROPOSED BRIDGE TYPICAL SECTION

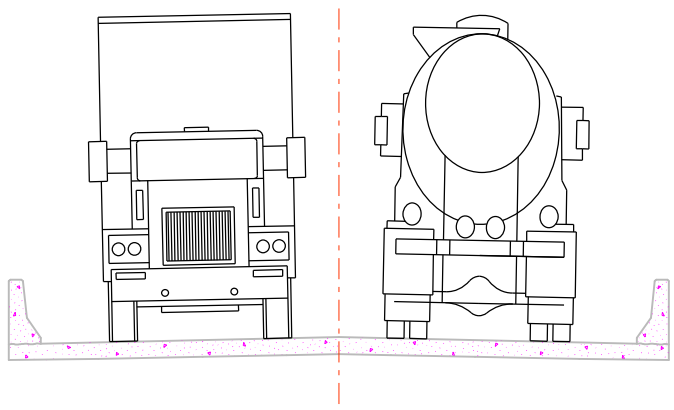

EXISTING BRIDGE FACTS

ROUTE 94 – BRIDGE # T0593

- Existing Bridge was constructed in 1948
- Length = 138′ and Width = 20′

PROPOSED BRIDGE FACTS

ROUTE 94 – BRIDGE # B0336

- Construction Year 2012
- Length = 130′ and Width = 24′

DETOUR

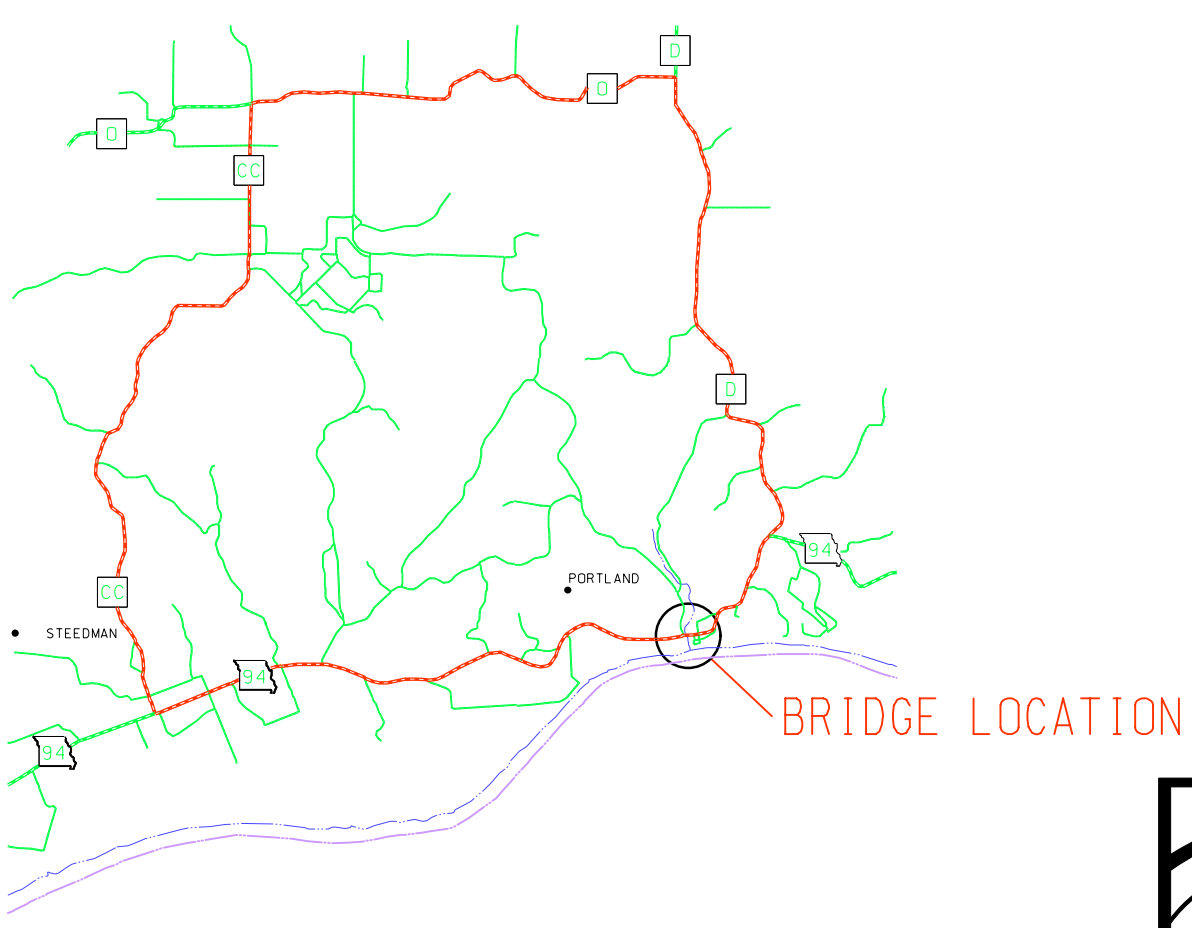

MoDOT

SAFE & SOUND