LACLEDE COUNTY ROUTE 32
MILL CREEK
CONSTRUCTION STARTS EARLY MARCH 2012

EXISTING BRIDGE

PROPOSED BRIDGE TYPICAL SECTION

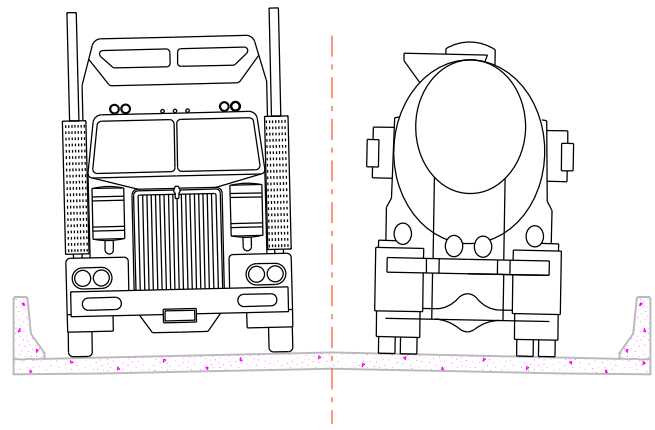

EXISTING BRIDGE FACTS

ROUTE PP – BRIDGE # T0671

- Existing Bridge was constructed in 1936
- Length = 112′ and Width = 24′

PROPOSED BRIDGE FACTS

ROUTE PP – NEW BRIDGE # B0450

- Construction year 2012
- Bridge Replacement
- Construction Duration: Approximately 54 days
- Length = 110′ and Width = 28′

DETOUR

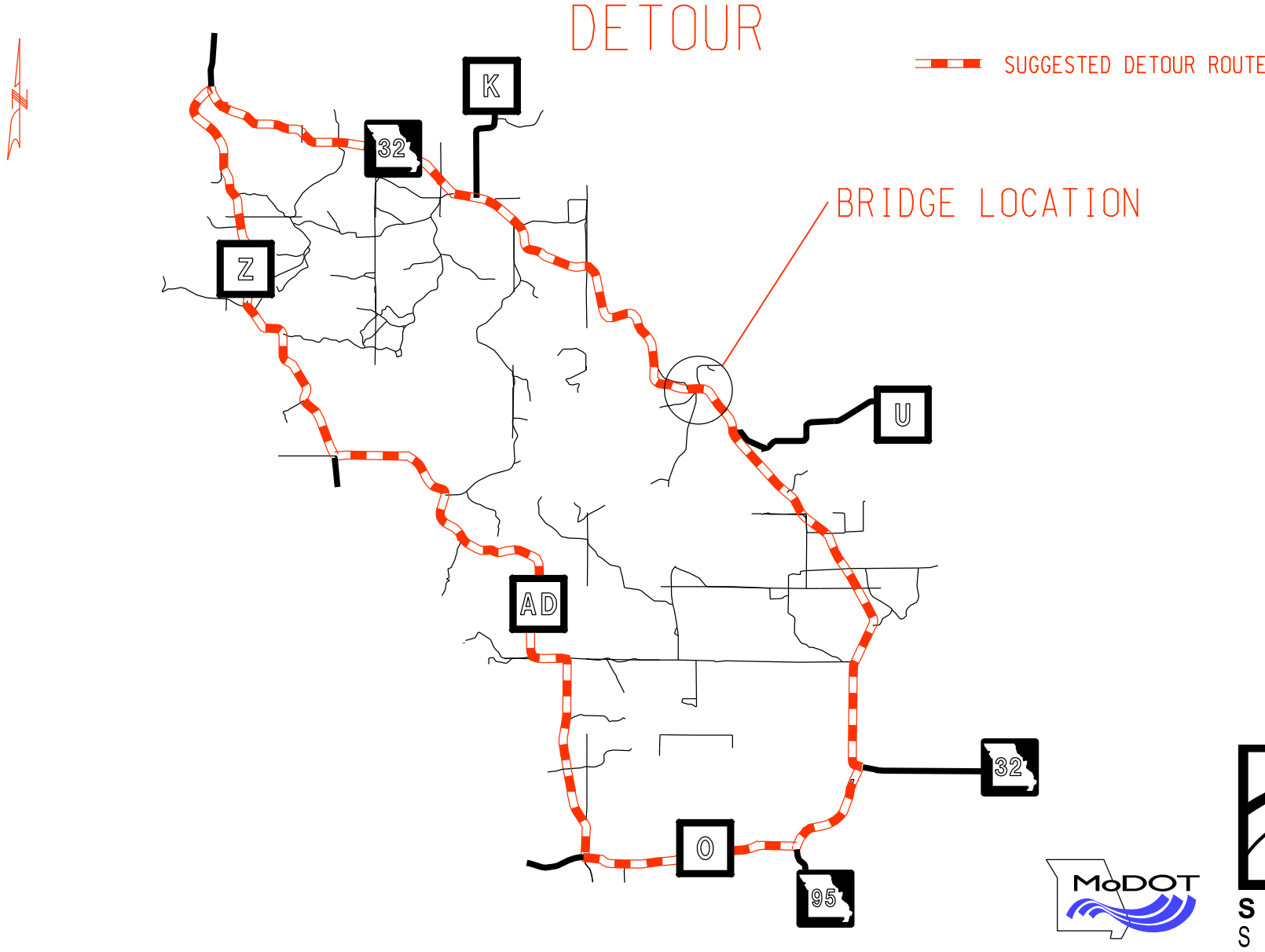

MoDOT

SAFE & SOUND