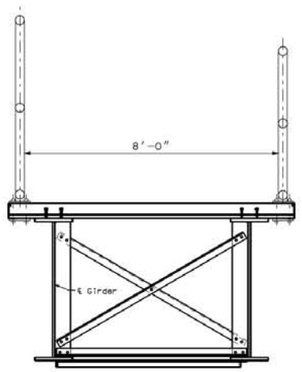

Ⓐ-South Approach Spans
8 Foot Width

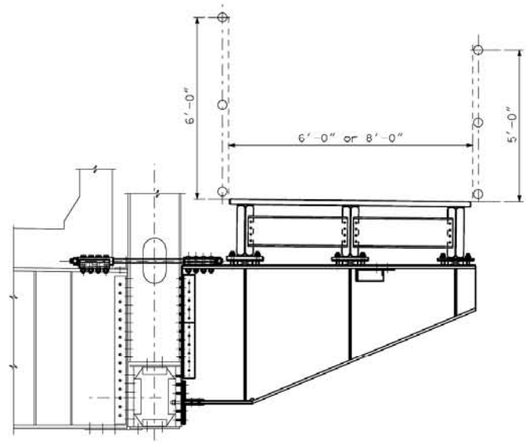

Ⓑ-Truss Spans
6 or 8 Foot Width

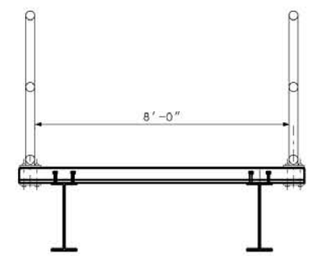

Ⓒ-Ramp Structure Spans
8 Foot Width
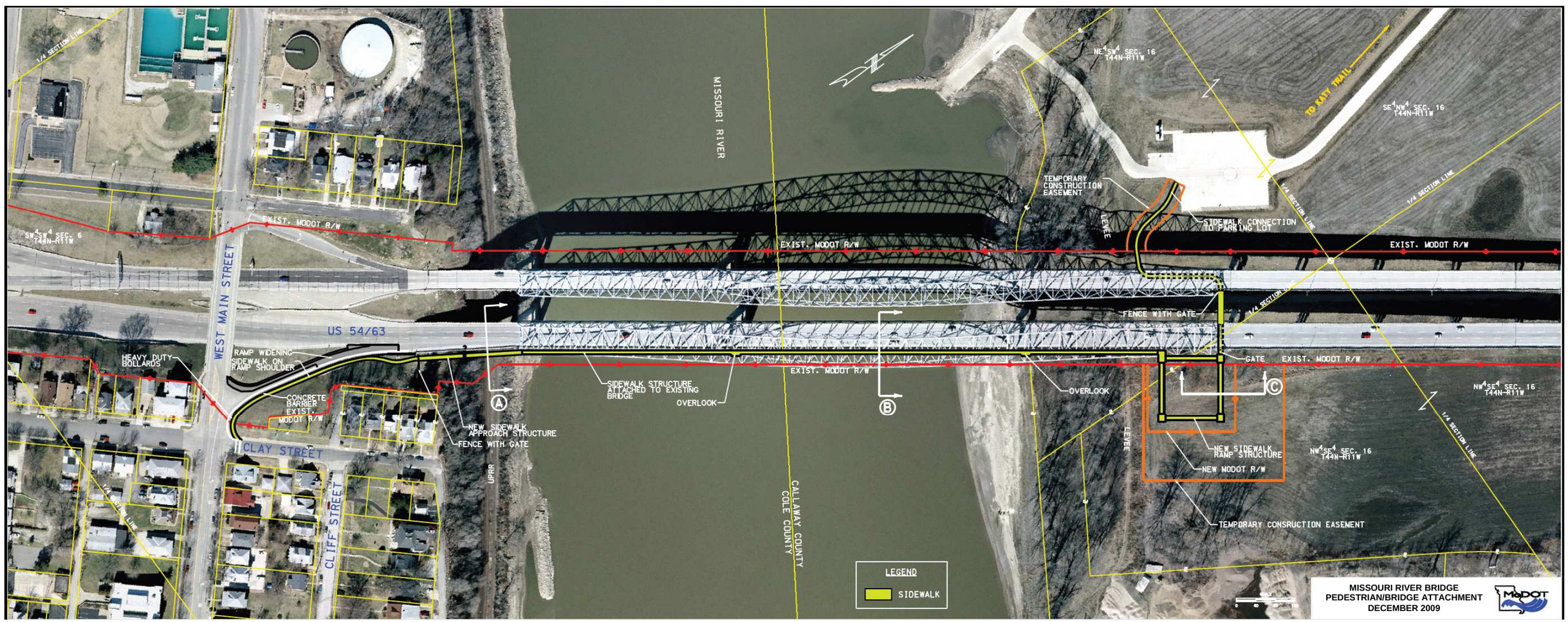
Ramp Structure