DENT COUNTY ROUTE H
HOLT CREEK
CONSTRUCTION DURING SUMMER 2012

EXISTING BRIDGE

PROPOSED BRIDGE TYPICAL SECTION

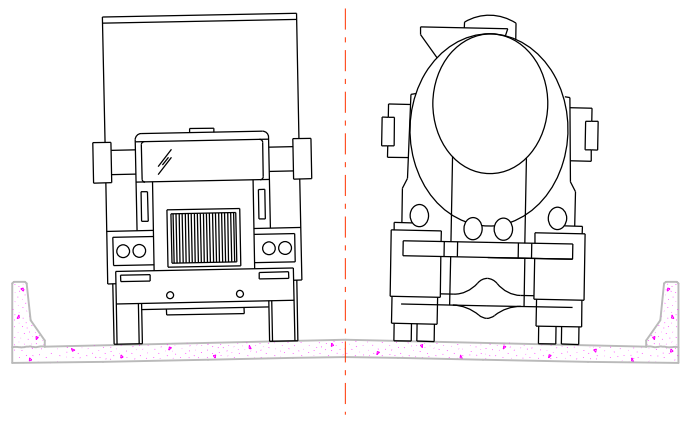

EXISTING BRIDGE FACTS

ROUTE H – BRIDGE # S0269

- Existing Bridge was constructed in 1931
- Length = 96′ and Width = 20′
  (Clear Width curb to curb)

PROPOSED BRIDGE FACTS

ROUTE H – NEW BRIDGE # B0470

- Construction Year 2012
- Length = 100′ and Width = 24′
  (Clear Width curb to curb)

DETOUR

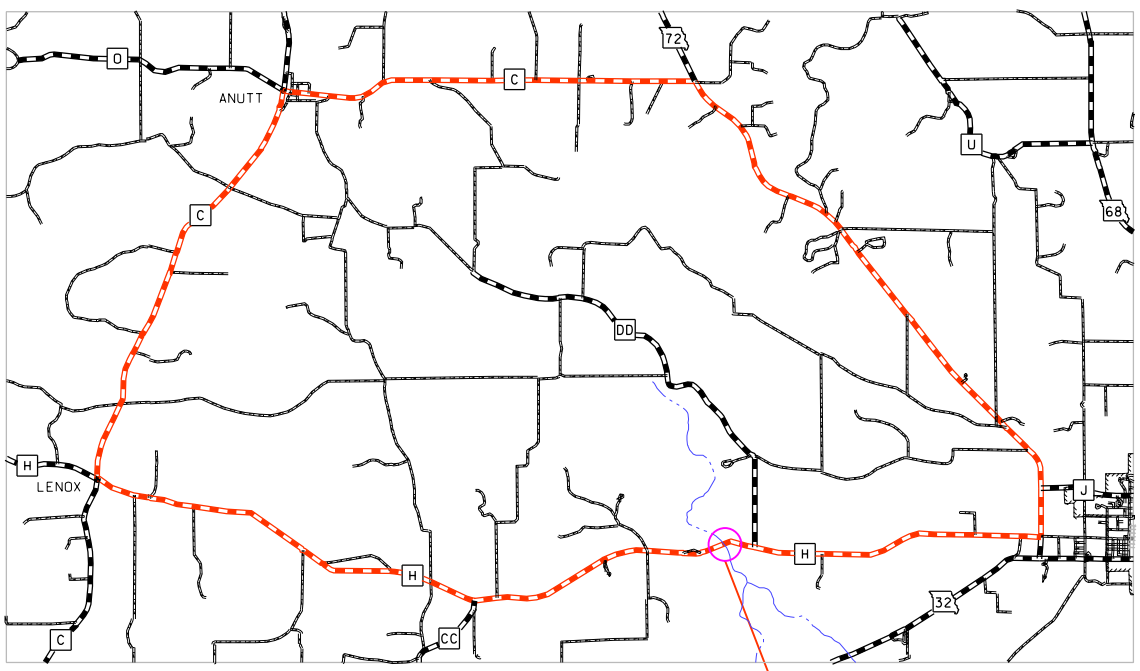

BRIDGE LOCATION

MoDOT

SAFE & SOUND