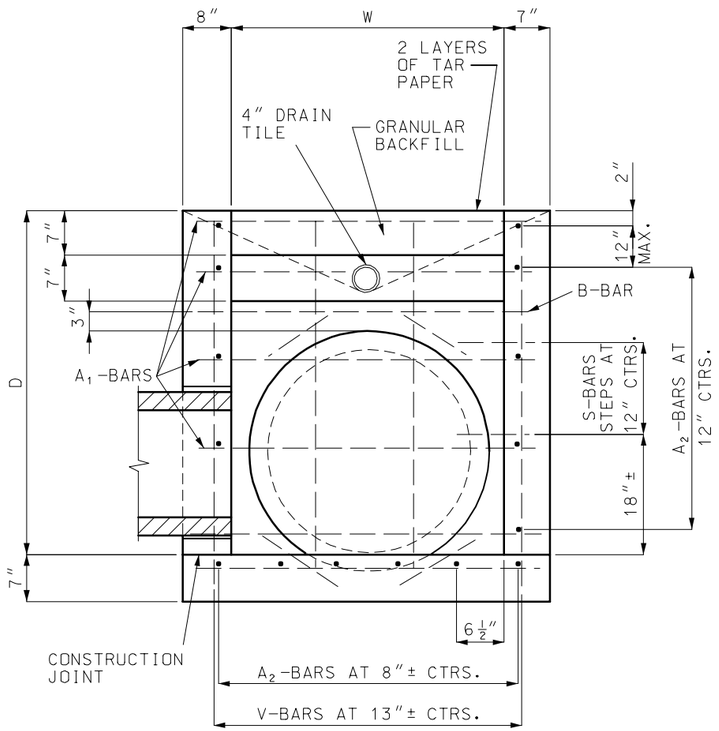


SECTION A-A

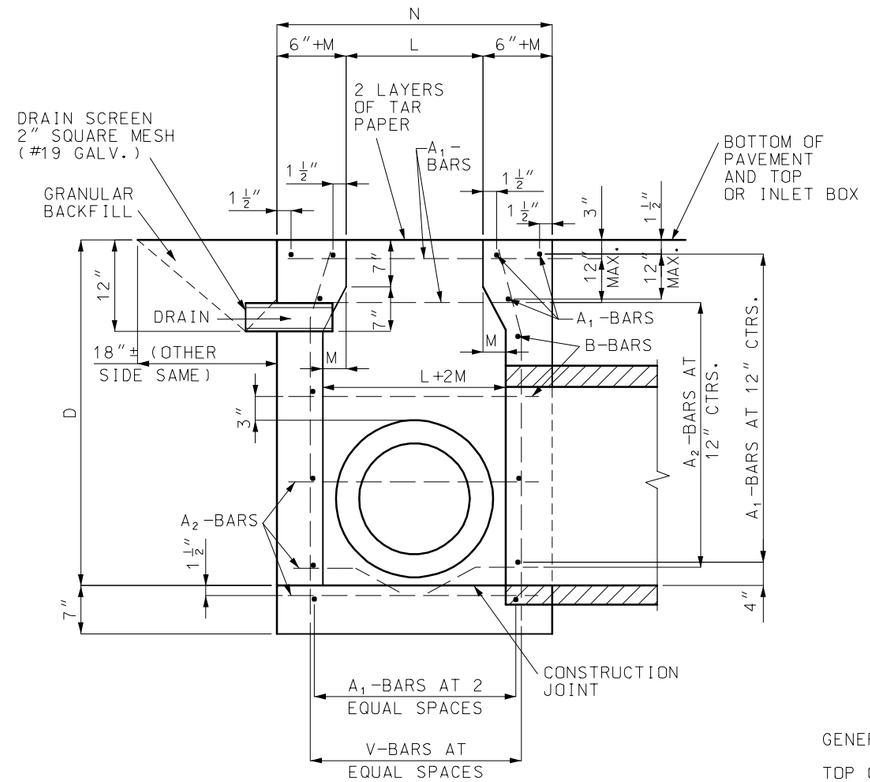


SECTION B-B

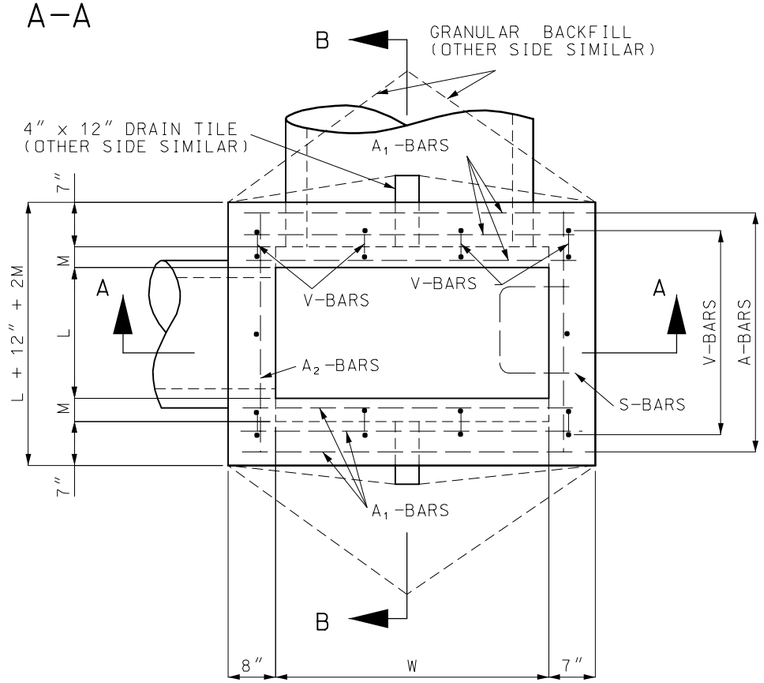


PLAN

GENERAL NOTES:

TOP OF DROP INLET WALLS SHALL BE LEVEL AND TO THE ELEVATION OF BOTTOM OF SLAB AT EDGE OF PAVEMENT, AT DROP INLET.

ALL CONCRETE ABOVE THE TAR-PAPER SEPARATION JOINT IS TO BE CONSTRUCTED DURING

PAVING OPERATIONS AND WILL BE PAID FOR AS SQUARE YARDS OF CONCRETE PAVEMENT.

ALL CONCRETE BELOW THE TAR-PAPER SEPARATION JOINT SHALL BE CLASS "B" CONCRETE. CONCRETE IN INVERTS SHALL
BE PLACED AFTER DROP INLET HAS BEEN CONSTRUCTED.

REINFORCING BARS SHALL BE CUT AND/OR BENT AT PIPE OPENINGS. ALL U AND F-BARS
SHALL BE SECURELY TIED TOGETHER AND FASTENED TO SECURE AGAINST ANY POSSIBLE
DISPLACEMENT DURING THE PLACING OF CONCRETE. THE REINFORCING STEEL SHOWN ON
THIS DRAWING IS IN ADDITION TO ANY REINFORCING SHOWN ON DRAWINGS FOR CONCRETE
PAVEMENT.

NO DIRECT PAYMENT WILL BE MADE FOR CUTTING PIPE.

| MISSOURI HIGHWAYS AND TRANSPORTATION COMMISSION | | | |
|---|---|---|---|
| | **DROP INLET**<br>TYPE C | | |
| DATE:_____ | EFFECTIVE: 07-01-2004 | **604.21C** | 1/3 |

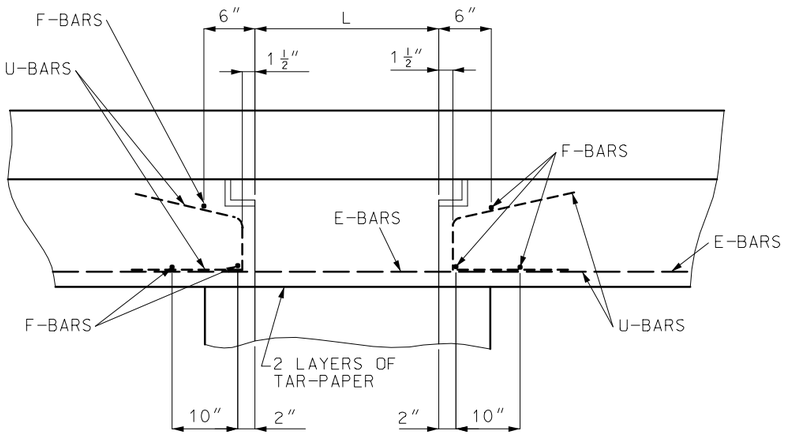


SECTION D-D

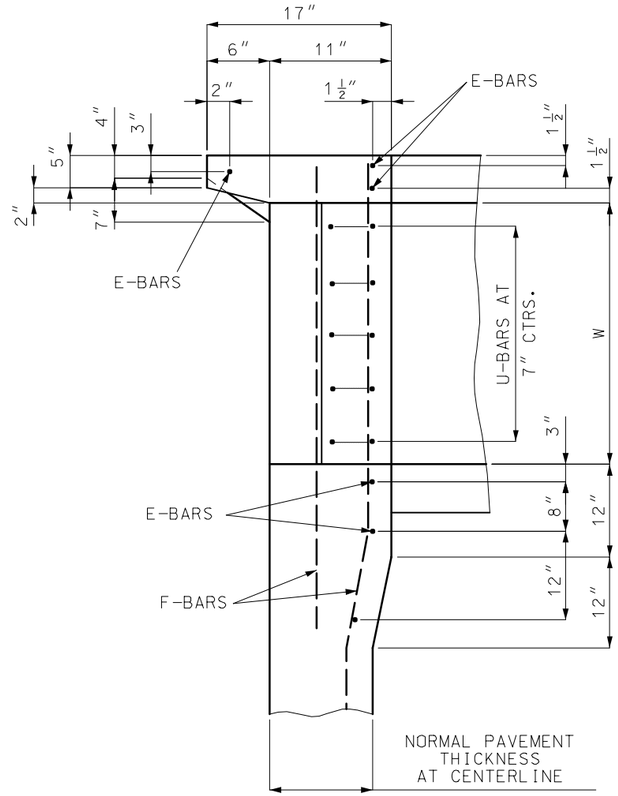


SECTION C-C

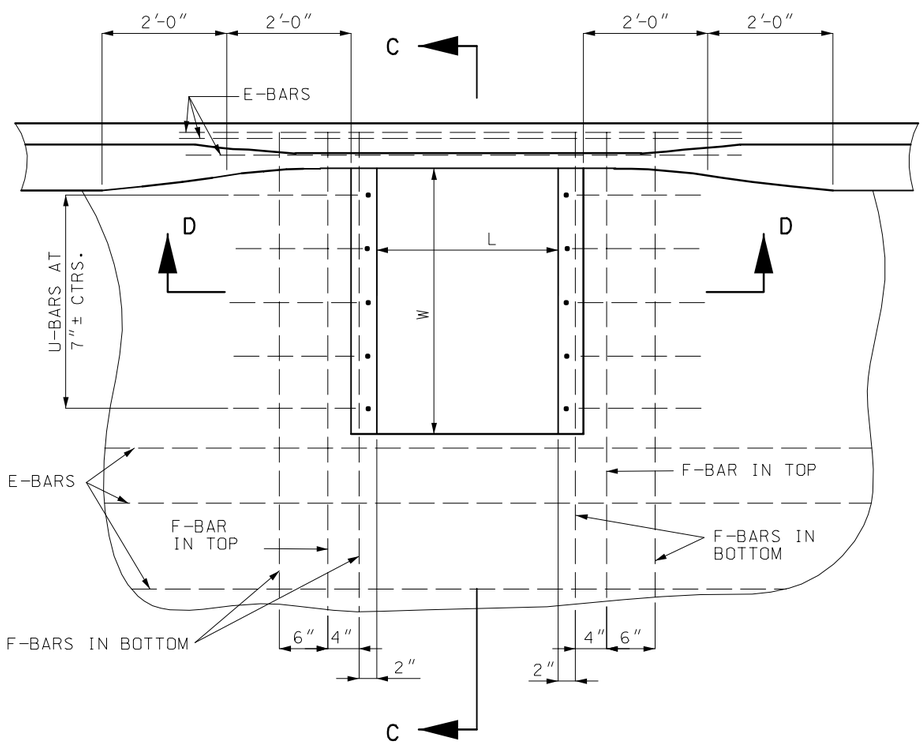


PLAN

| MISSOURI HIGHWAYS AND TRANSPORTATION COMMISSION | | | |
|---|---|---|---|
| | **DROP INLET**<br>TYPE C | | |
| DATE:_____ | EFFECTIVE: 07-01-2004 | **604.21C** | 2/3 |

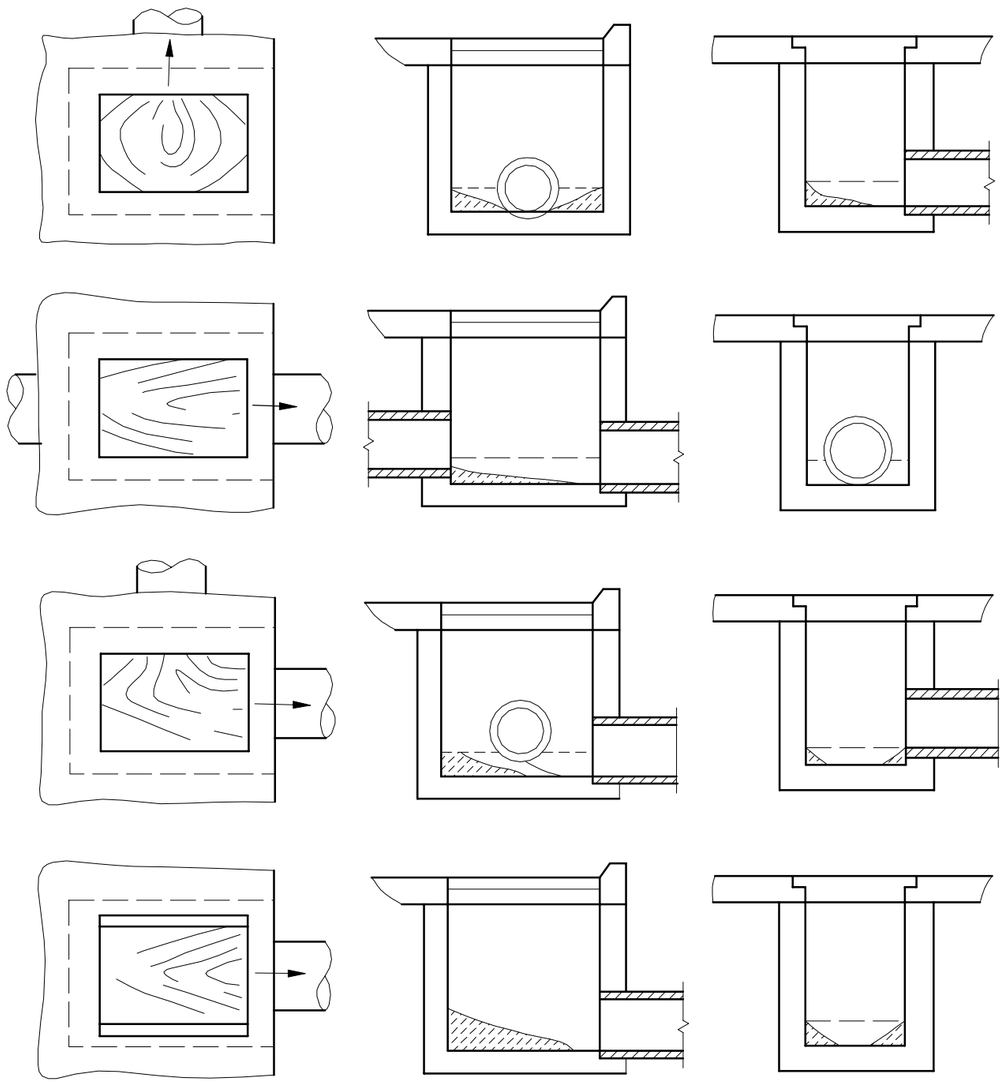


**TYPICAL INVERTS**

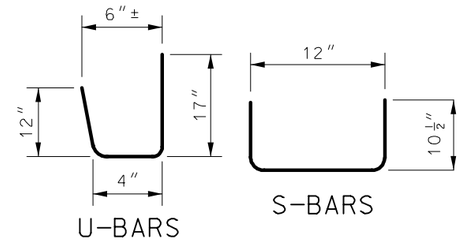


BENDING DIAGRAMS

| QUANTITIES | | | | | |
|---|---|---|---|---|---|
| SIZE | | 2 X 3 | 2 X 4 | 3 X 3 | 3 X 4 |
| D | C | 1.08 | 1.31 | 1.35 | 1.65 |
| 2′-6″ | S | 163 | 193 | 168 | 197 |
| 3′-0″ | C | 1.23 | 1.49 | 1.54 | 1.88 |
| | S | 177 | 208 | 181 | 213 |
| 3′-6″ | C | 1.38 | 1.66 | 1.72 | 2.10 |
| | S | 181 | 213 | 186 | 218 |
| 4′-0″ | C | 1.53 | 1.84 | 1.91 | 2.32 |
| | S | 193 | 228 | 200 | 234 |
| 4′-6″ | C | 1.68 | 2.02 | 2.10 | 2.54 |
| | S | 211 | 245 | 216 | 251 |
| 5′-0″ | C | 1.82 | 2.19 | 2.28 | 2.76 |
| | S | 228 | 264 | 234 | 271 |
| 5′-6″ | C | 1.97 | 2.37 | 2.46 | 2.99 |
| | S | 236 | 273 | 242 | 280 |
| 6′-0″ | C | 2.12 | 2.54 | 2.65 | 3.21 |
| | S | 250 | 289 | 256 | 296 |
| 6′-6″ | C | 2.27 | 2.72 | 2.83 | 3.43 |
| | S | 258 | 297 | 264 | 304 |
| 7′-0″ | C | 2.42 | 2.90 | 3.02 | 3.65 |
| | S | 271 | 313 | 278 | 320 |

QUANTITIES INCLUDE 0.15 C.Y. CONCRETE FOR INVERT.

| CONCRETE DEDUCTION FOR EACH PIPE OPENING C.Y. | | | | | |
|---|---|---|---|---|---|
| 12″ | 15″ | 18″ | 24″ | 30″ | 36″ |
| 0.02 | 0.04 | 0.05 | 0.09 | 0.14 | 0.20 |

| FOR PIPE OPENING THROUGH WALLS | | | | | |
|---|---|---|---|---|---|
| WITH INSIDE LENGTH OF | 2.0′ | 2.5′ | 3.0′ | 3.5′ | 4.0′ |
| ADD (LBS. OF STEEL FOR B-BAR) | 4 | 5 | 6 | 6 | 7 |

| DIMENSIONS | | | | |
|---|---|---|---|---|
| SIZE | 2 X 3 | 2 X 4 | 3 X 3 | 3 X 4 |
| GRATE OPENING | 2′ X 3′ | 2′ X 4′ | 2′ X 3′ | 2′ X 4′ |
| INSIDE BOX | 30″ X 36″ | 30″ X 48″ | 36″ X 36″ | 36″ X 48″ |
| L | 24″ | 24″ | 24″ | 24″ |
| W | 36″ | 48″ | 36″ | 48″ |
| M | 3″ | 3″ | 6″ | 6″ |
| N | 42″ | 42″ | 48″ | 48″ |

| BAR BILLS | | | | | | | | | |
|---|---|---|---|---|---|---|---|---|---|
| | | 2 X 3 | | 2 X 4 | | 3 X 3 | | 3 X 4 | |
| DEPTH "D" | MARK | NO. | LENGTH | NO. | LENGTH | NO. | LENGTH | NO. | LENGTH |
| ALL DEPTHS | E | 6 | 6′-0″ | 6 | 6′-0″ | 6 | 6′-0″ | 6 | 6′-0″ |
| | F | 6 | 5′-6″ | 6 | 6′-6″ | 6 | 5′-6″ | 6 | 6′-6″ |
| | U | 10 | 2′-9″ | 14 | 2′-9″ | 10 | 2′-9″ | 14 | 2′-9″ |
| 2′-6″ | $A_1$ | 11 | 3′-9″ | 11 | 4′-9″ | 11 | 3′-9″ | 11 | 4′-9″ |
| | $A_2$ | 12 | 3′-3″ | 13 | 3′-3″ | 12 | 3′-9″ | 13 | 3′-9″ |
| | V | 12 | 2′-9″ | 14 | 2′-9″ | 12 | 2′-9″ | 14 | 2′-9″ |
| 3′-0″ | $A_1$ | 13 | 3′-9″ | 13 | 4′-9″ | 13 | 3′-9″ | 13 | 4′-9″ |
| | $A_2$ | 14 | 3′-3″ | 15 | 3′-3″ | 14 | 3′-9″ | 15 | 3′-9″ |
| | V | 12 | 3′-3″ | 14 | 3′-3″ | 12 | 3′-3″ | 14 | 3′-3″ |
| 3′-6″ | $A_1$ | 13 | 3′-9″ | 13 | 4′-9″ | 13 | 3′-9″ | 13 | 4′-9″ |
| | $A_2$ | 14 | 3′-3″ | 15 | 3′-3″ | 14 | 3′-9″ | 15 | 3′-9″ |
| | V | 12 | 3′-9″ | 14 | 3′-9″ | 12 | 3′-9″ | 14 | 3′-9″ |
| 4′-0″ | $A_1$ | 15 | 3′-9″ | 15 | 4′-9″ | 15 | 3′-9″ | 15 | 4′-9″ |
| | $A_2$ | 16 | 3′-3″ | 17 | 3′-3″ | 16 | 3′-9″ | 17 | 3′-9″ |
| | V | 12 | 4′-3″ | 14 | 4′-3″ | 12 | 4′-3″ | 14 | 4′-3″ |
| 4′-6″ | $A_1$ | 15 | 3′-9″ | 15 | 4′-9″ | 15 | 3′-9″ | 15 | 4′-9″ |
| | $A_2$ | 16 | 3′-3″ | 17 | 3′-3″ | 16 | 3′-9″ | 17 | 3′-9″ |
| | V | 12 | 4′-9″ | 14 | 4′-9″ | 12 | 4′-9″ | 14 | 4′-9″ |
| | S | 3 | 2′-9″ | 3 | 2′-9″ | 3 | 2′-9″ | 3 | 2′-9″ |
| 5′-0″ | $A_1$ | 17 | 3′-9″ | 17 | 4′-9″ | 17 | 3′-9″ | 17 | 4′-9″ |
| | $A_2$ | 18 | 3′-3″ | 19 | 3′-3″ | 18 | 3′-9″ | 19 | 3′-9″ |
| | V | 12 | 5′-3″ | 14 | 5′-3″ | 12 | 5′-3″ | 14 | 5′-3″ |
| | S | 4 | 2′-9″ | 4 | 2′-9″ | 4 | 2′-9″ | 4 | 2′-9″ |
| 5′-6″ | $A_1$ | 17 | 3′-9″ | 17 | 4′-9″ | 17 | 3′-9″ | 17 | 4′-9″ |
| | $A_2$ | 18 | 3′-3″ | 19 | 3′-3″ | 18 | 3′-9″ | 19 | 3′-9″ |
| | V | 12 | 5′-9″ | 14 | 5′-9″ | 12 | 5′-9″ | 14 | 5′-9″ |
| | S | 5 | 2′-9″ | 5 | 2′-9″ | 5 | 2′-9″ | 5 | 2′-9″ |
| 6′-0″ | $A_1$ | 19 | 3′-9″ | 19 | 4′-9″ | 19 | 3′-9″ | 19 | 4′-9″ |
| | $A_2$ | 20 | 3′-3″ | 21 | 3′-3″ | 20 | 3′-9″ | 21 | 3′-9″ |
| | V | 12 | 6′-3″ | 14 | 6′-3″ | 12 | 6′-3″ | 14 | 6′-3″ |
| | S | 5 | 2′-9″ | 5 | 2′-9″ | 5 | 2′-9″ | 5 | 2′-9″ |
| 6′-6″ | $A_1$ | 19 | 3′-9″ | 19 | 4′-9″ | 19 | 3′-9″ | 19 | 4′-9″ |
| | $A_2$ | 20 | 3′-3″ | 21 | 3′-3″ | 20 | 3′-9″ | 21 | 3′-9″ |
| | V | 12 | 6′-9″ | 14 | 6′-9″ | 12 | 6′-9″ | 14 | 6′-9″ |
| | S | 6 | 2′-9″ | 6 | 2′-9″ | 6 | 2′-9″ | 6 | 2′-9″ |
| 7′-0″ | $A_1$ | 21 | 3′-9″ | 21 | 4′-9″ | 21 | 3′-9″ | 21 | 4′-9″ |
| | $A_2$ | 22 | 3′-3″ | 23 | 3′-3″ | 22 | 3′-9″ | 23 | 3′-9″ |
| | V | 12 | 7′-3″ | 14 | 7′-3″ | 12 | 7′-3″ | 14 | 7′-3″ |
| | S | 6 | 2′-9″ | 6 | 2′-9″ | 6 | 2′-9″ | 6 | 2′-9″ |

$A_1$, $A_2$, F, AND V-BARS.....#4
E AND U-BAR.....#5
B AND S-BAR.....#6

MISSOURI HIGHWAYS AND TRANSPORTATION COMMISSION

**DROP INLET**
TYPE C

DATE:_____ EFFECTIVE: 07-01-2004 **604.21C** 3/3