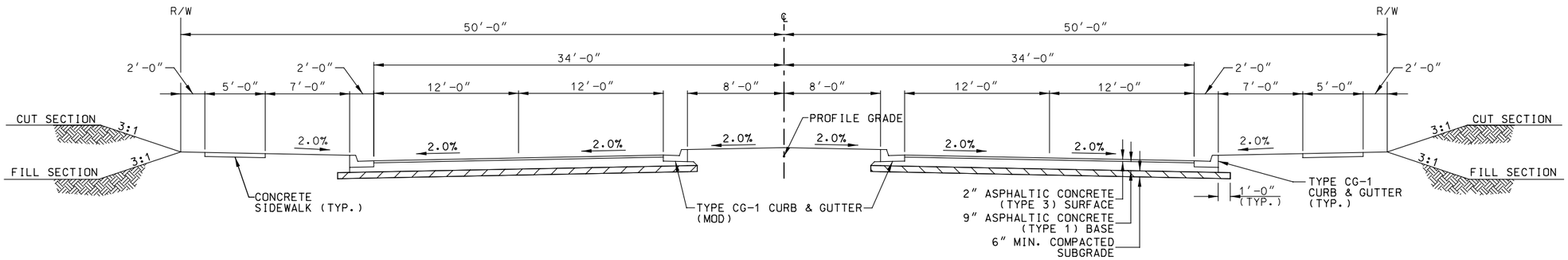

EXISTING FLINTLOCK ROAD
NORTH OF NE 76TH ST.
KANSAS CITY, MO.

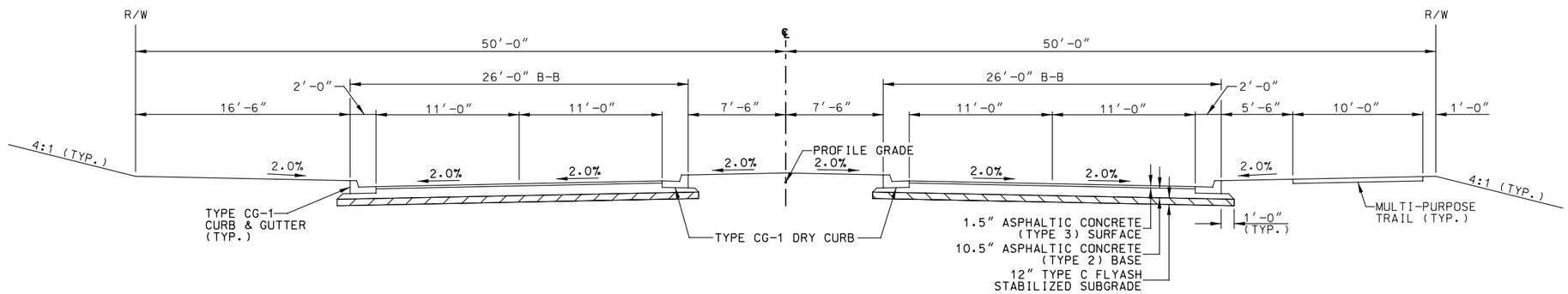

EXISTING FLINTLOCK ROAD
SOUTH OF LIBERTY DRIVE
LIBERTY, MO.

CITY OF FOUNTAINS HEART OF THE NATION KANSAS CITY MISSOURI · THE CITY OF LIBERTY · Liberty PUBLIC SCHOOLS		**FLINTLOCK OVERPASS** **Existing Typical Sections**	**Exhibit I - 1**