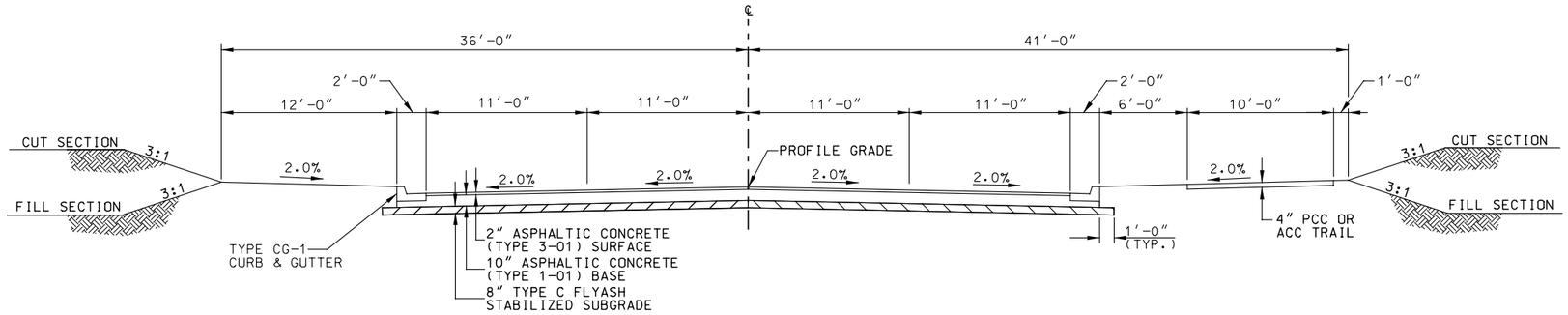

FLINTLOCK ROAD
4-LANE SECTION

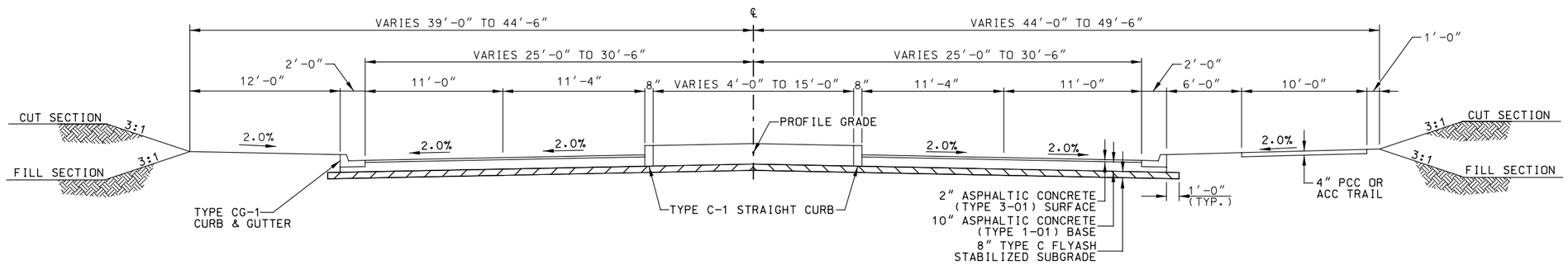

FLINTLOCK ROAD
4-LANE SECTION WITH MEDIAN

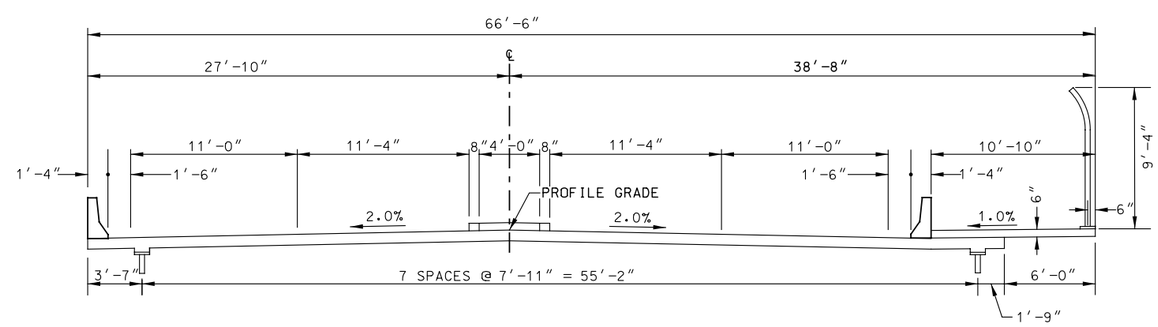

FLINTLOCK ROAD
BRIDGE SECTION WITH MEDIAN

	FLINTLOCK OVERPASS **Proposed Typical Sections**	**Exhibit II - 2**