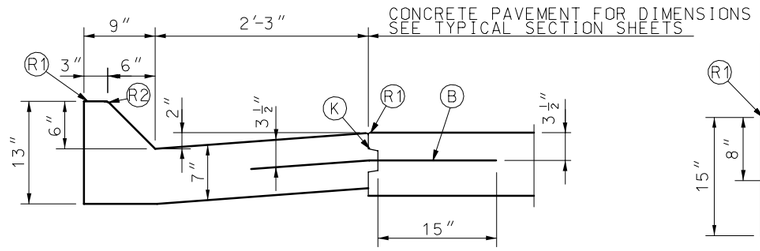

TYPE A
(MOUNTABLE)

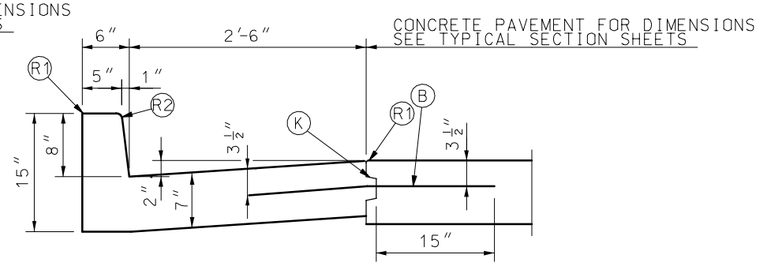

TYPE B
(BARRIER)

CURB & GUTTER

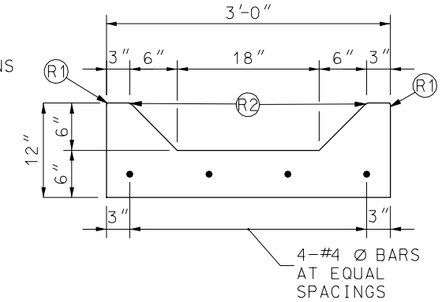

TYPE A

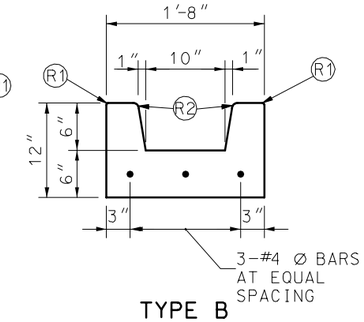

TYPE B

GUTTERS

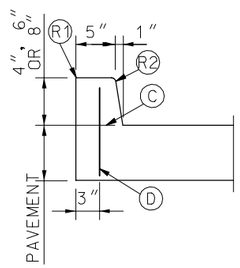

TYPE A
(INTEGRAL)

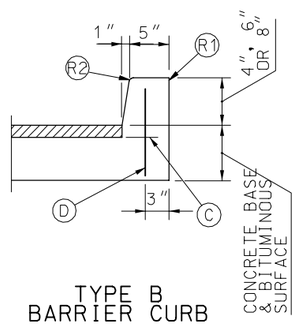

TYPE B
BARRIER CURB

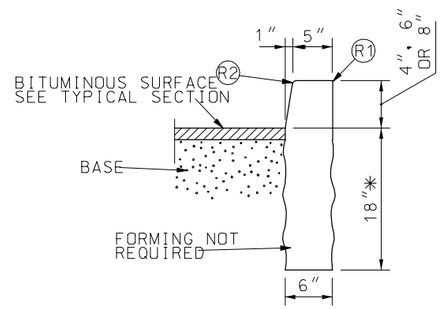

TYPE S
(SEPERATED)

* DEPTH MAY BE REDUCED IF KEYED 6″ IN ROCK

BARRIER CURBS

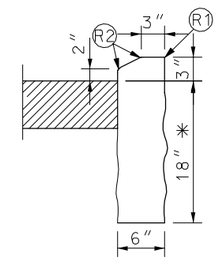

TYPE F
(SEPARATED)

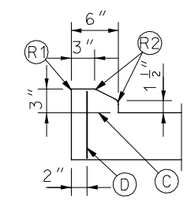

TYPE E
(INTEGRAL)

BEGINNING AND ENDINGS OF INTROCUCED LOW PROFILE CURBS SHALL UTILIZE CURB HEIGHT RUNOUT FORM 0 INCH TO 3 INCHES IN 5 FEET PAYMENT. LENGTH SHALL INCLUDE TAPERS.

* DEPTH MAY BE REDUCED IF KEYED 6″ IN ROCK.

LOW PROFILE CURB

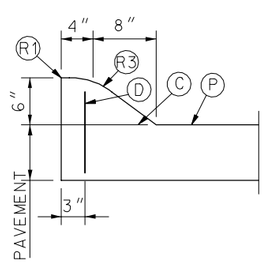

TYPE M
(INTEGRAL)

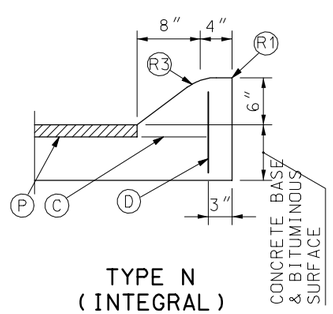

TYPE N
(INTEGRAL)

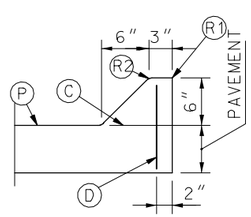

TYPE O
(INTEGRAL)

MOUNTABLE CURBS

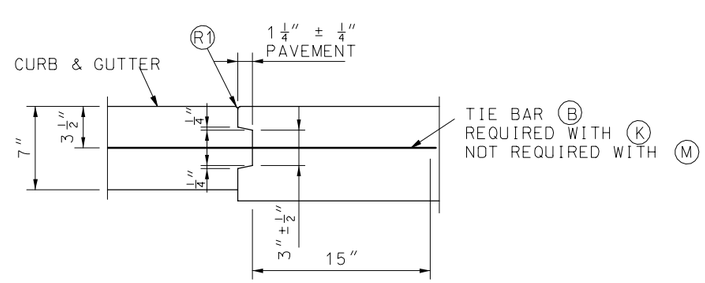

THRU TONGUE & GROOVE JOINT

GENERAL NOTES:

MISSOURI HIGHWAYS AND TRANSPORTATION COMMISSION

CONCRETE CURB
CURB GUTTER
GUTTER

DATE:_____ EFFECTIVE:01-01-2005 **609.00M** 2/2

p:\A_Francd1\Mike Folder\Concrete_Curb_2.dgn 10:47:14 AM 10/20/2004